8BCM0004.10360-0

1 General information

- Can be used in cable drag chains
- Assembled specifically for 8BCMxxxx.1034C-0 motor cables
- itec - Innovative connector system for fast and secure connections

2 Order data

Model number	Short description	Figure
	Motor cables 0.75 mm² SpringTec connector	
8BCM0004.10360-0	Cable extension for 0.75 mm² motor cables with series 915 power connector, length 4 m, can be used in cable drag chains	

Table 1: 8BCM0004.10360-0 - Order data

3 Technical data

Model number	8BCM0004.10360-0
General information	
Cable cross section	4x 0.75 mm² + 2x 2x 0.34 mm²
Durability	Oil resistance per HD 22.10 appendix A, DIN EN 60811-404 [1)]
Certification	E170315 cRUus AWM STYLE 21223 AWM I/II A/B 80°C 1000 V FT1 [1)]
Certifications	
CE	Yes
UL	cULus E225616 Power conversion equipment
EAC	Yes
Cable construction	
Power lines	
Quantity	4
Wire insulation	PP
Wire colors	Black, brown, blue, yellow/green
Variant	Tinned copper stranded wire
Cross section	0.75 mm²
Shield	No
Stranding	No
Signal line	
Quantity	4
Wire insulation	PP
Wire colors	White, white/red, white/blue, white/green
Variant	Tinned copper stranded wire
Cross section	0.34 mm²
Shield	Individually shielded in pairs, tinned copper braiding, optical coverage >85% and foil shield
Stranding	White with white/red and white/blue with white/green
Cable stranding	With filler elements and foil shield
Cable shield	Tinned copper braiding, optical coverage >85% and foil shield
Outer jacket	
Material	TPU
Color	Orange, similar to RAL 2003 flat
Labeling	B&R 4 G 0.75 + 2 x (2x0.34)C C E170315 cRUus AWM STYLE 21223 AWM I/II A/B 80°C 1000 V FT1 production order number [1)]
Connector	
Type	9-pin female series 915 power connector
Mating cycles	<500
Contacts	9
Additional connectors	9-pin male coupling Mating cycles: <500 Contacts: 9 Degree of protection per EN 60529: IP66/67 when connected
Degree of protection per EN 60529	IP66/67 when connected
Electrical properties [1)]	
Operating voltage	Max. 1000 VAC (UL)

Table 2: 8BCM0004.10360-0 - Technical data

Model number	8BCM0004.10360-0
Test voltage	
Wire - Wire	4 kV
Wire - Shield	4 kV
Conductor resistance	
Power lines	≤26.7 Ω/km
Signal line	≤56 Ω/km
Insulation resistance	≥500 MΩ*km
Current-carrying capacity per DIN VDE 0298 part 4, table 11	
Wall mounting	13 A
Installed in conduit or cable duct	11.5 A
Installed in cable tray	13.5 A
Ambient conditions [1]	
Temperature	
Moving	-20°C to +80°C
Static	-20°C to +90°C
Mechanical properties [1]	
Dimensions	
Length	4 m
Diameter	10.1 mm ±0.3 mm
Bend radius	
Single bend	>32 mm
Moving	>78 mm
Drag chain data	
Acceleration	Max. 50 m/s² (depends on the length of the travel path)
Flex cycles [2]	≥5,000,000
Velocity	Max. 300 m/min
Weight	0.36 kg

Table 2: 8BCM0004.10360-0 - Technical data

1) Values refer to the raw cable being used.
2) At an ambient temperature from -20°C to +60°C.

4 Wiring

4.1 Cable construction

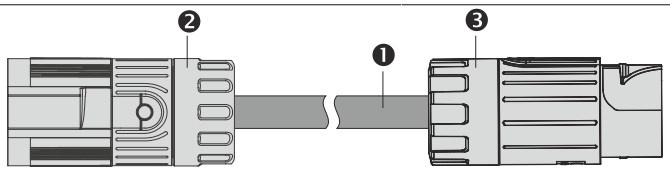

Pos	Description	Note
1	Motor line	4x 0.75 mm² + 2x 2x 0.34 mm²
2	9-pin female circular connector	Dimensions: ø 19 x 42 mm
3	9-pin coupling	Dimensions: ø 19 x 41.4 mm

Table 3: Cable extension for 0.75 mm² motor cables - Cable construction

4.2 Pinout

Connector	Pin	Description	Function	Coupling
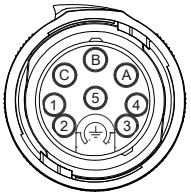	A	U	Motor connection U	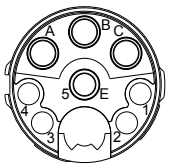
	B	V	Motor connection V	
	C	W	Motor connection W	
	⏚	PE	Protective ground conductor	
	1	T+	Temperature +	
	2	T-	Temperature -	
	3	B+	Brake +	
	4	B-	Brake -	
	5	---	---	

Table 4: 0.75 mm² motor cable extension - Pinout

4.3 Cable diagram

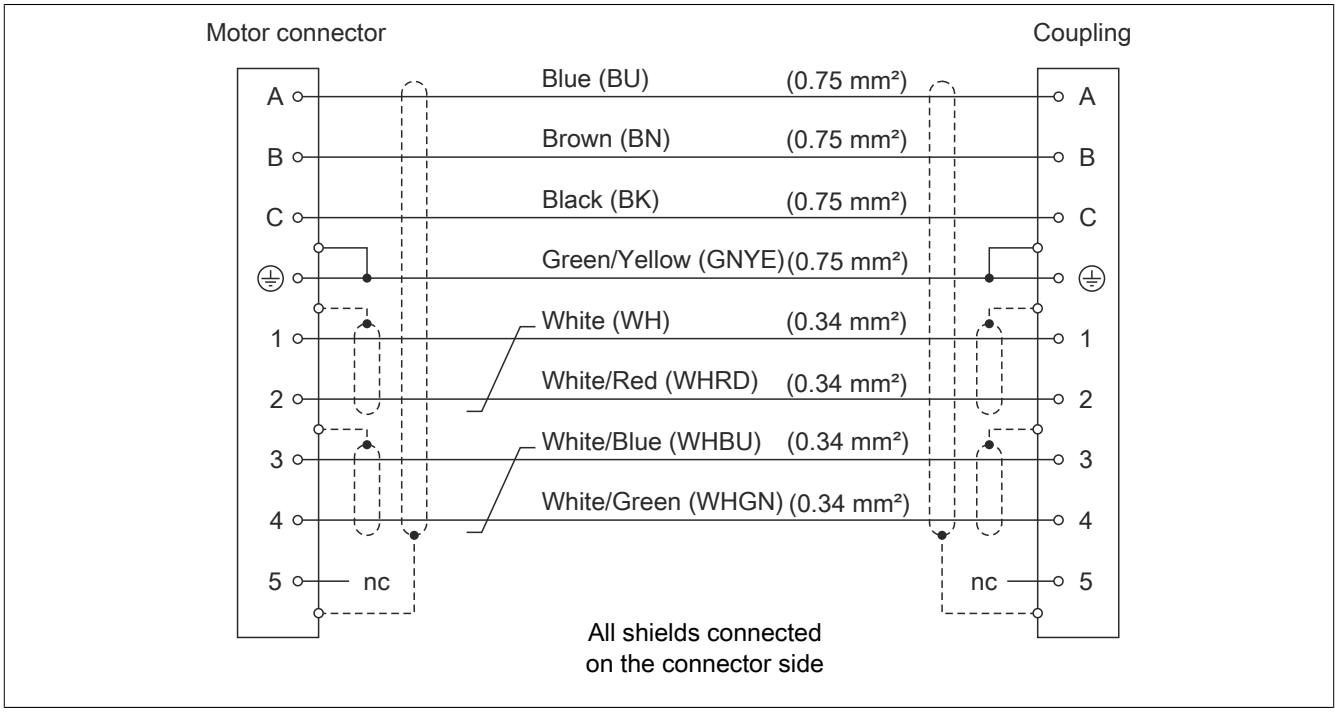

Figure 1: Cable extension for 0.75 mm² motor cables - Cable diagram