# X20DO8332-1

## 1 General information

The module is equipped with 8 outputs for 1-wire connections. The nominal output current is 2 A.

The output power supply is fed directly into the module. An additional power supply module is therefore not necessary. There is no connection between the module and the I/O power supply potential on the bus module.

- 8 digital outputs with 2 A
- Source circuit
- 1-wire connections
- Power supply integrated in the module
- Integrated output protection

## 2 Order data

| Model number | Short description | Figure |
|---|---|---|
| | **Digital outputs** |  |
| X20DO8332-1 | X20 digital output module, 8 outputs, 24 VDC, 2 A, source, optimized for inductive loads, power supply directly on module, 1-wire connections | |
| | **Required accessories** | |
| | **Bus modules** | |
| X20BM11 | X20 bus module, 24 VDC keyed, internal I/O supply continuous | |
| X20BM15 | X20 bus module, with node number switch, 24 VDC keyed, internal I/O supply continuous | |
| | **Terminal blocks** | |
| X20TB12 | X20 terminal block, 12-pin, 24 VDC keyed | |

Table 1: X20DO8332-1 - Order data

# 3 Technical data

| Model number | X20DO8332-1 |
|---|---|
| **Short description** | |
| I/O module | 8 digital outputs 24 VDC for 1-wire connections |
| **General information** | |
| B&R ID code | 0xF321 |
| Status indicators | I/O function per channel, operating state, module status |
| Diagnostics | |
| Module run/error | Yes, using status LED and software |
| Outputs | Yes, using status LED and software (output error status) |
| Supply voltage monitoring | Yes, using status LED and software (output error status) |
| Power consumption | |
| Bus | 0.26 W |
| Internal I/O | - |
| External I/O | 0.81 W |
| Additional power dissipation caused by actuators (resistive) [W] [1)] | +0.336 |
| Certifications | |
| CE | Yes |
| EAC | Yes |
| UL | cULus E115267<br>Industrial control equipment |
| **Digital outputs** | |
| Variant | FET positive switching |
| Number of output groups | 2 |
| Nominal voltage | 24 VDC |
| Switching voltage | 24 VDC -15% / +20% |
| Nominal output current | 2 A |
| Total nominal current | 8 A [2)] |
| Connection type | 1-wire connections |
| Output circuit | Source |
| Output protection | Thermal cutoff if overcurrent or short circuit occurs (see value "Peak short-circuit current")<br>Internal freewheeling diode for switching inductive loads (see section "Switching inductive loads")<br>Reverse polarity protection of supply voltage |
| Actuator power supply | |
| Supply | External |
| Fuse | Required line fuse: Max. 10 A, slow-blow |
| Diagnostic status | Output monitoring with 18 ms delay |
| Leakage current when switched off | 5 µA |
| $R_{DS(on)}$ | 21 mΩ |
| Peak short-circuit current | 90 A for 200 µs |
| Switch-on in the event of overload shutdown or short-circuit shutdown | 300 ms |
| Switching delay | |
| 0 → 1 | <300 µs |
| 1 → 0 | <300 µs |
| Switching frequency | |
| Resistive load | Max. 500 Hz |
| Inductive load | See section "Switching inductive loads" |
| Braking voltage when switching off inductive loads | Typ. 64 VDC |
| Isolation voltage between channel and bus | 500 $V_{eff}$ |
| Additional functions | Outputs can be connected in parallel to increase the output current. |
| **Electrical properties** | |
| Electrical isolation | Channel isolated from bus<br>Channel not isolated from channel |
| **Operating conditions** | |
| Mounting orientation | |
| Horizontal | Yes |
| Vertical | Yes |
| Installation elevation above sea level | |
| 0 to 2000 m | No limitation |
| >2000 m | Reduction of ambient temperature by 0.5°C per 100 m |
| Degree of protection per EN 60529 | IP20 |
| **Ambient conditions** | |
| Temperature | |
| Operation | |
| Horizontal mounting orientation | -25 to 60°C |
| Vertical mounting orientation | -25 to 50°C |
| Derating | See section "Derating". |
| Storage | -40 to 85°C |
| Transport | -40 to 85°C |

Table 2: X20DO8332-1 - Technical data

| Model number | X20DO8332-1 |
|---|---|
| Relative humidity | |
| Operation | 5 to 95%, non-condensing |
| Storage | 5 to 95%, non-condensing |
| Transport | 5 to 95%, non-condensing |
| **Mechanical properties** | |
| Note | Order 1x terminal block X20TB12 separately<br>Order 1x bus module X20BM11 separately |
| Spacing | $12.5^{+0.2}$ mm |

Table 2: X20DO8332-1 - Technical data

1) Number of outputs x $R_{DS(on)}$ x Nominal output current[2]. For a calculation example, see section "Mechanical and electrical configuration" of the X20 system user's manual.
2) Derating must be observed for summation current starting at 6 A.

# 4 LED status indicators

For a description of the various operating modes, see section "Additional information - Diagnostic LEDs" of the X20 system user's manual.

| Figure | LED | Color | Status | Description |
|---|---|---|---|---|
|  | r | Green | Off | No power to module |
| | | | Single flash | Mode RESET |
| | | | Blinking | Mode PREOPERATIONAL |
| | | | On | Mode RUN |
| | e | Red | Off | No power to module or everything OK |
| | | | Single flash | Warning/Error on an I/O channel. Level monitoring for digital outputs has been triggered. |
| | | | Double flash | I/O power supply too low |
| | e + r | Solid red / Single green flash | | Invalid firmware |
| | 1 - 8 | Orange | | Output state of the corresponding digital output |

# 5 Pinout

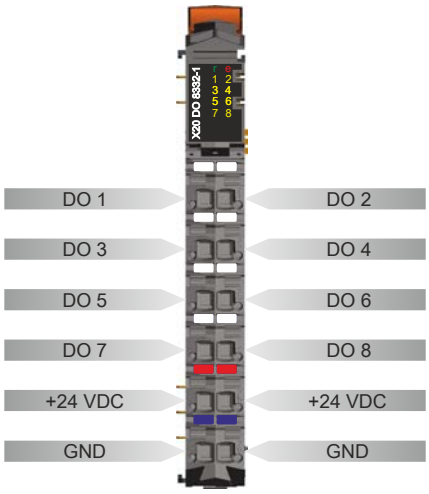

# 6 Connection example

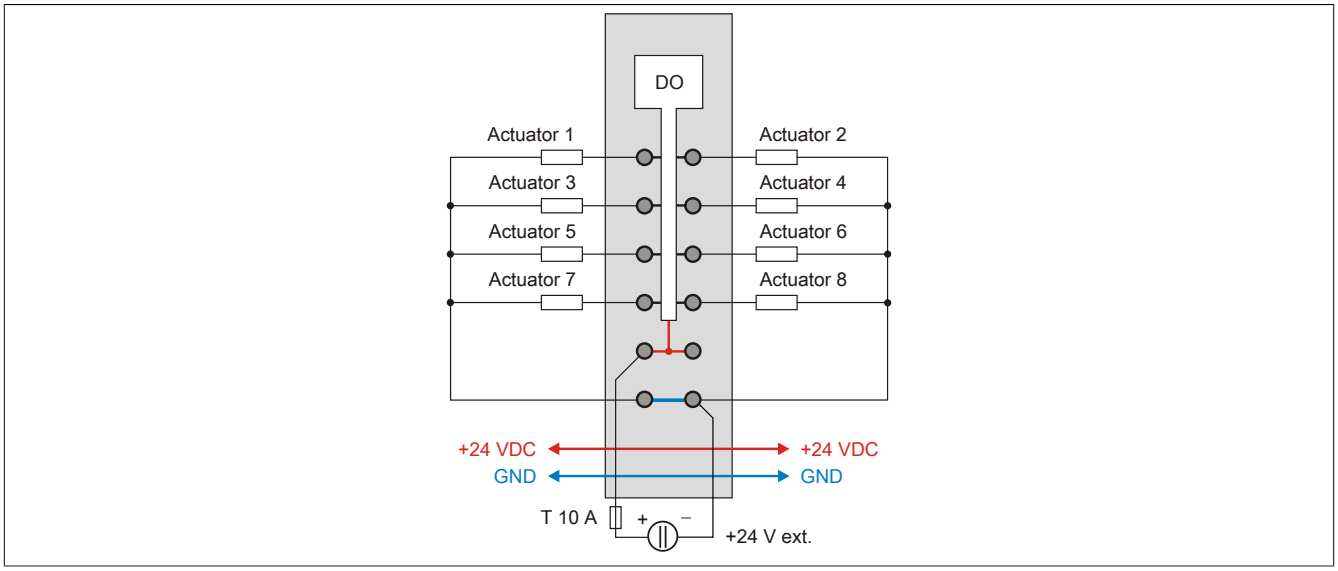


## Caution!

**If the module is operated outside of specifications, the output current can increase above the maximum permissible nominal current. This applies to individual channels and also to the summation current for the module.**

**Therefore sufficient cable cross sections or external safety measures must be used.**

# 7 Output circuit diagram

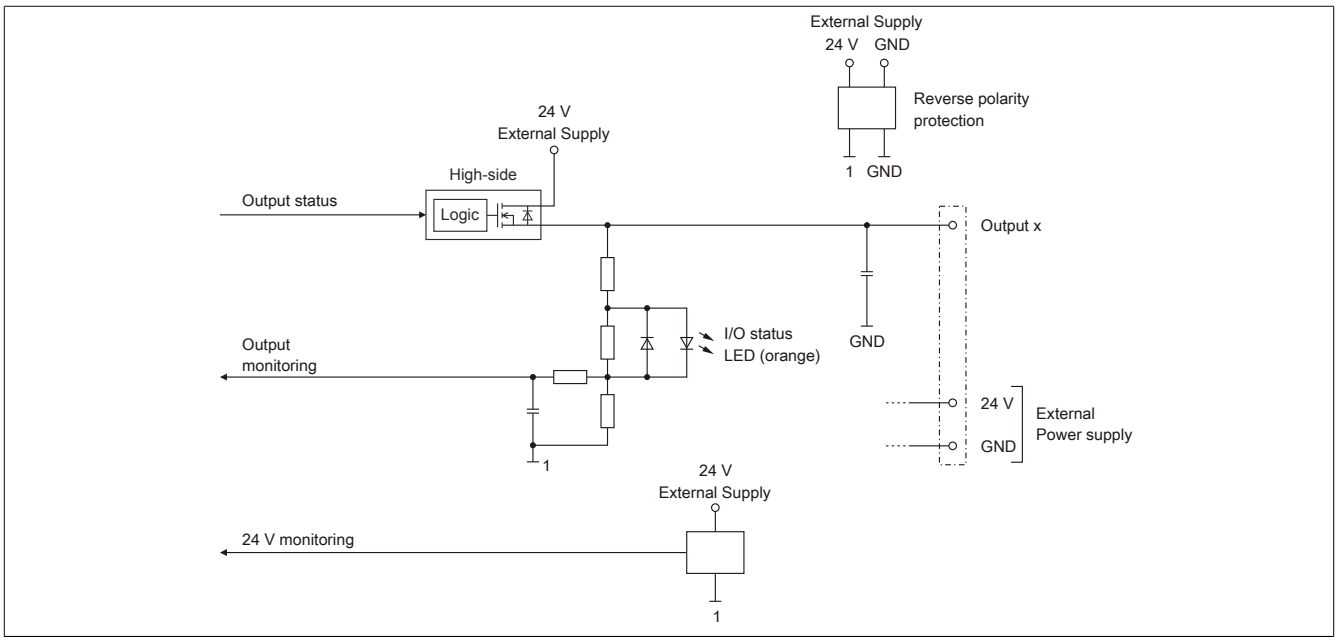

# 8 Switching inductive loads

Ambient temperature: 35°C, 4 outputs with the same load.

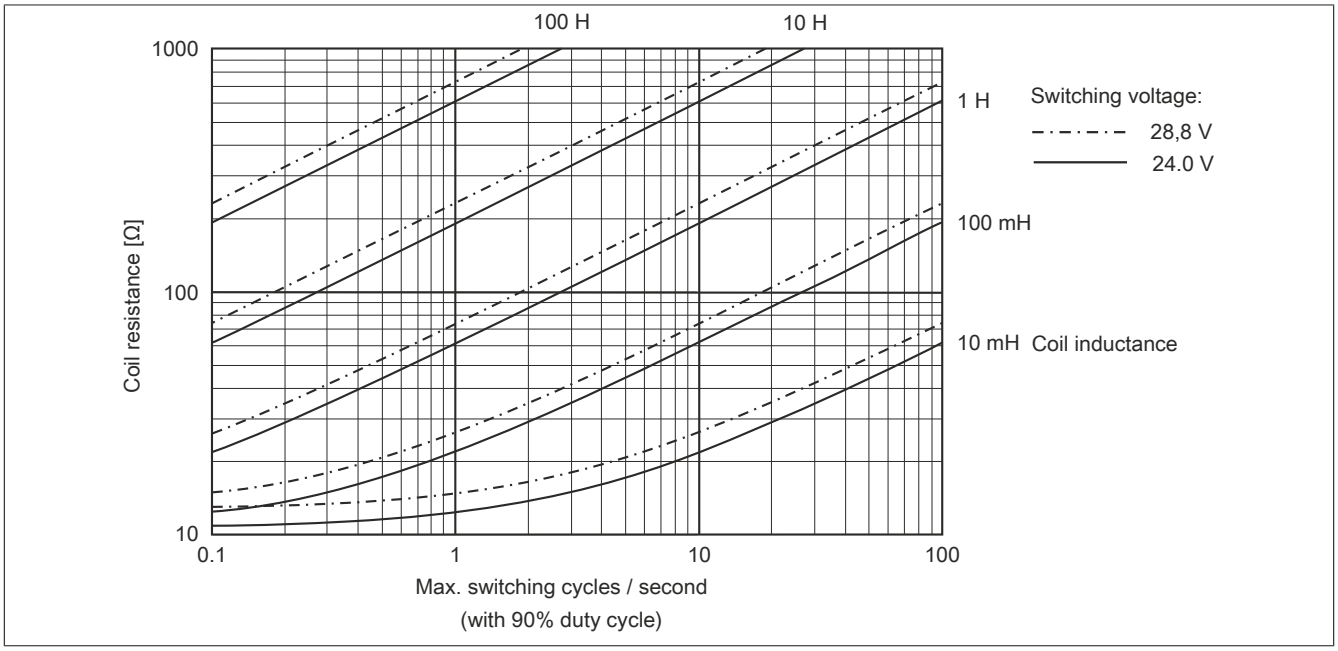


Ambient temperature: 60°C, 4 outputs with the same load.

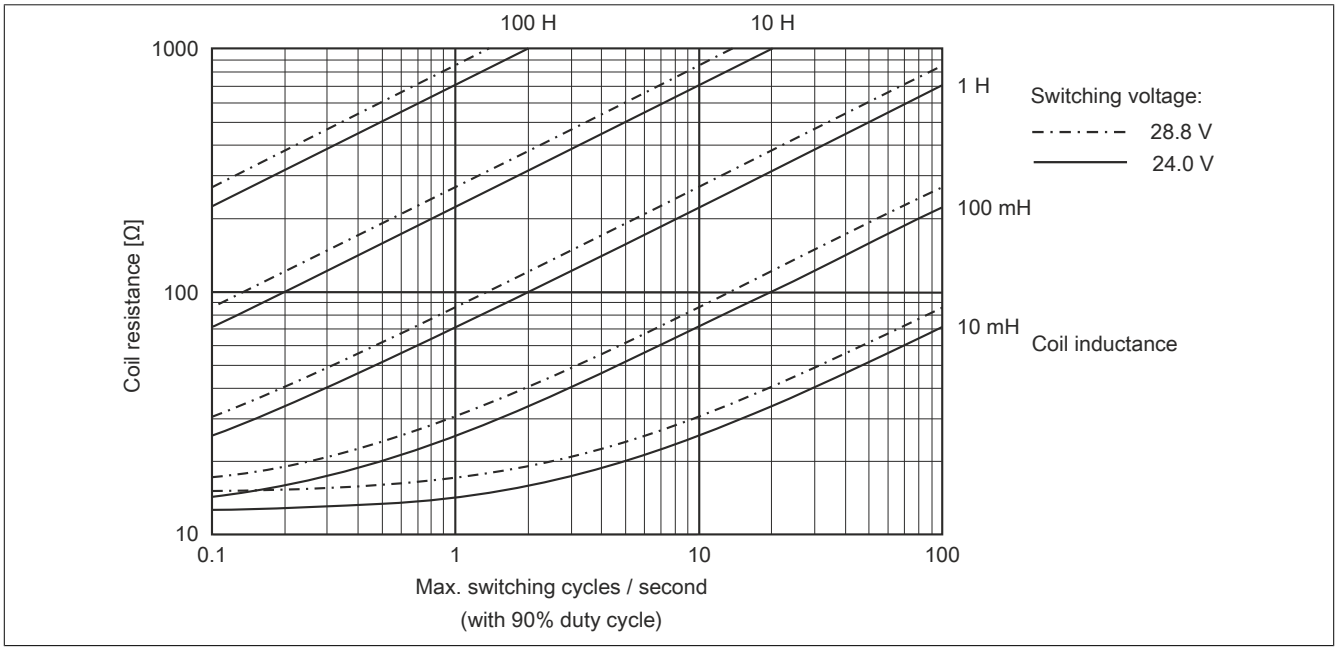

Ambient temperature: 60°C, all outputs with the same load.

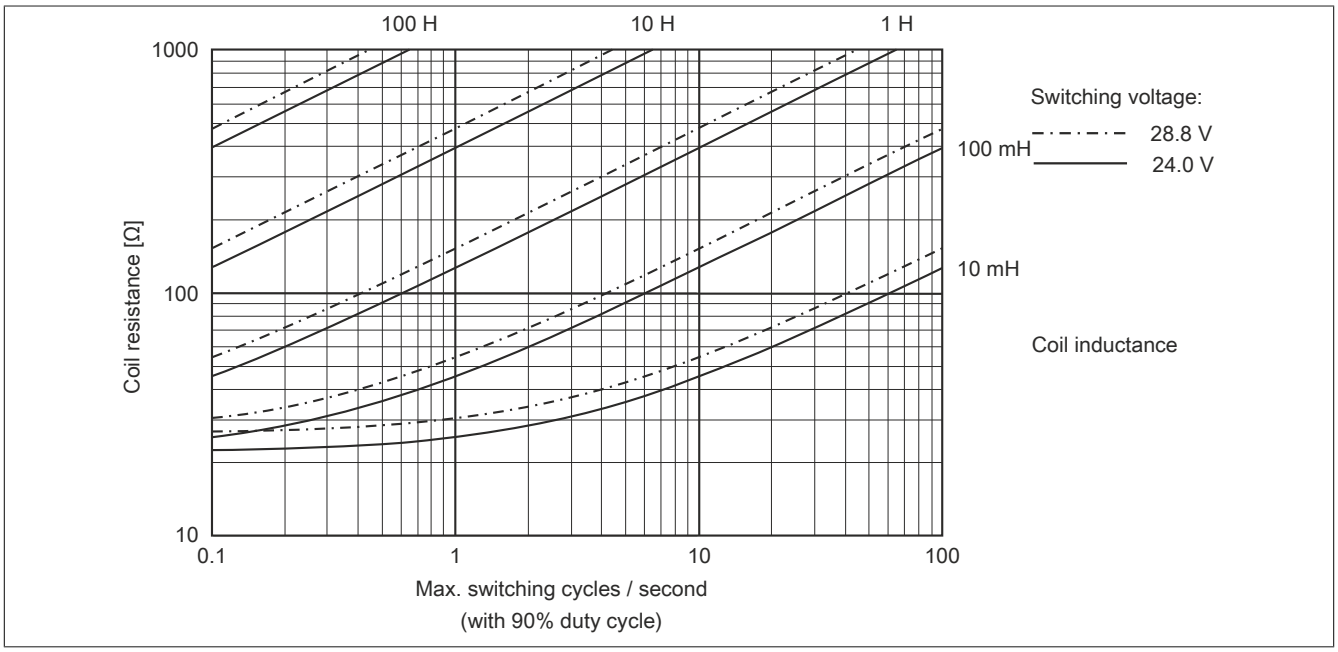


## Information:

**If the maximum number of operating cycles per second is exceeded, an external inverse diode must be used.**

**Operating conditions outside of the area in the diagram are not permitted!**

## 9 Derating

The outputs of the module can handle up to 2 A. With a summation current of 8 A, no more than 4 channels are operable at full load.

Derating must be taken into account starting at 6 A.

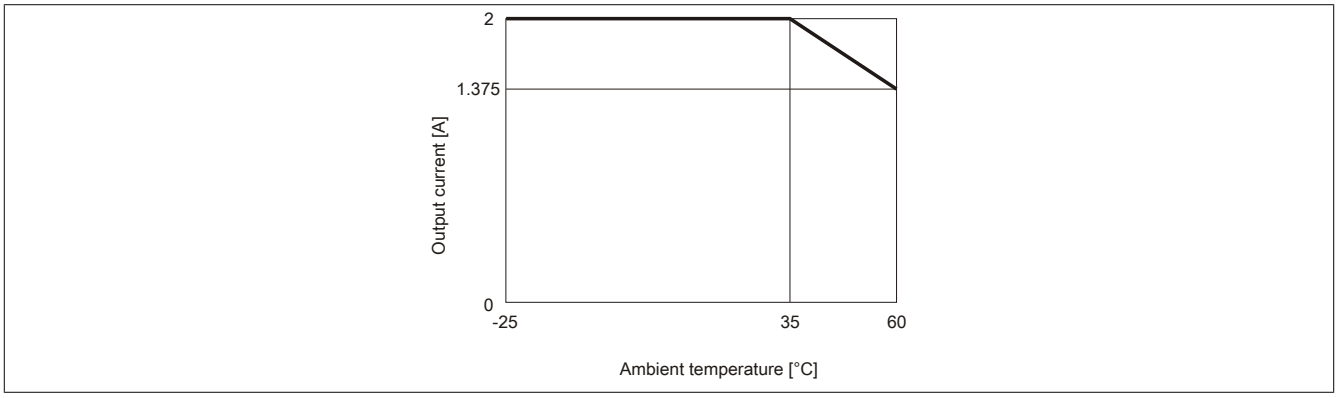


## Information:

**Only modules with a maximum power consumption of 1.5 W are permitted to be operated next to the module.**

**For an example of calculating the power dissipation of I/O modules, see section "Mechanical and electrical configuration - Power dissipation of I/O modules" in the X20 user's manual.**

# 10 Register description

## 10.1 General data points

In addition to the registers described in the register description, the module has additional general data points. These are not module-specific but contain general information such as serial number and hardware variant.

General data points are described in section "Additional information - General data points" of the X20 system user's manual.

## 10.2 Function model 0 - Standard

| Register | Fixed offset | Name | Data type | Read | | Write | |
|---|---|---|---|---|---|---|---|
| | | | | Cyclic | Acyclic | Cyclic | Acyclic |
| 2 | 0 | DigitalOutput | USINT | | | • | |
| | | DigitalOutput01 | Bit 0 | | | | |
| | | ... | ... | | | | |
| | | DigitalOutput08 | Bit 7 | | | | |
| 30 | 1 | StatusInput01 | USINT | | • | | |
| | | StatusDigitalOutput01 | Bit 0 | | | | |
| | | ... | ... | | | | |
| | | StatusDigitalOutput08 | Bit 7 | | | | |
| 8192 | - | Reading the module ID | UINT | | • | | |
| 8196 | - | Status of the supply voltage | USINT | | • | | |
| | | PowerSupply01 | Bit 2 | • | | | |

Fixed modules require their data points to be in a specific order in the X2X frame. Cyclic access occurs according to a predefined offset, not based on the register address.

Acyclic access continues to be based on the register numbers.

## 10.3 Function model 1 - Output switching

| Register | Fixed offset | Name | Data type | Read | | Write | |
|---|---|---|---|---|---|---|---|
| | | | | Cyclic | Acyclic | Cyclic | Acyclic |
| 2 | 0 | Switching state of digital outputs 1 to 8 | USINT | | | • | |
| | | DigitalOutput01 | Bit 0 | | | | |
| | | ... | ... | | | | |
| | | DigitalOutput08 | Bit 7 | | | | |
| 4 | 1 | Switching state of delayed digital outputs 1 to 8 | USINT | | | • | |
| | | DigitalOutput01Delayed | Bit 0 | | | | |
| | | ... | ... | | | | |
| | | DigitalOutput08Delayed | Bit 7 | | | | |
| 6 | 2 | Switching mask after the delay time has expired | USINT | | | • | |
| | | DigitalOutput01DelayEnable | Bit 0 | | | | |
| | | ... | ... | | | | |
| | | DigitalOutput08DelayEnable | Bit 7 | | | | |
| 8 | 3 | Setting the delay (OutputDelayTime) | USINT | | | • | |
| 30 | 1 | Status of digital outputs 1 to 8 | USINT | | • | | |
| | | StatusDigitalOutput01 | Bit 0 | | | | |
| | | ... | ... | | | | |
| | | StatusDigitalOutput08 | Bit 7 | | | | |
| 8192 | - | Reading the module ID | UINT | | • | | |
| 8196 | - | Status of the supply voltage | USINT | | • | | |
| | | PowerSupply01 | Bit 2 | • | | | |

Fixed modules require their data points to be in a specific order in the X2X frame. Cyclic access occurs according to a predefined offset, not based on the register address.

Acyclic access continues to be based on the register numbers.

## 10.4 Function model 254 - Bus Controller

| Register | Offset[1)] | Name | Data type | Read | | Write | |
|---|---|---|---|---|---|---|---|
| | | | | Cyclic | Acyclic | Cyclic | Acyclic |
| 2 | 0 | Switching state of digital outputs 1 to 8 | USINT | | | • | |
| | | DigitalOutput01 | Bit 0 | | | | |
| | | ... | ... | | | | |
| | | DigitalOutput08 | Bit 7 | | | | |
| 30 | - | Status of digital outputs 1 to 8 | USINT | | • | | |
| | | StatusDigitalOutput01 | Bit 0 | | | | |
| | | ... | ... | | | | |
| | | StatusDigitalOutput08 | Bit 7 | | | | |
| 8192 | - | Reading the module ID | UINT | | • | | |
| 8196 | - | Status of the supply voltage | USINT | | • | | |
| | | Power Supply01 | Bit 2 | | • | | |

1) The offset specifies where the register is within the CAN object.

### 10.4.1 Using the module on the bus controller

Function model 254 "Bus controller" is used by default only by non-configurable bus controllers. All other bus controllers can use additional registers and functions depending on the fieldbus used.

For detailed information, see section "Additional information - Using I/O modules on the bus controller" of the X20 user's manual (version 3.50 or later).

### 10.4.2 CAN I/O bus controller

The module occupies 1 digital logical slot on CAN I/O.

## 10.5 Digital outputs

The output status is transferred to the output channels with a fixed offset (<60 µs) based on the network cycle (SyncOut).

### 10.5.1 Switching state of digital outputs 1 to 8

Name:
DigitalOutput
DigitalOutput01 to DigitalOutput08

The switching state of digital outputs 1 to 8 are stored in this register.

Only function model 0 - Standard:

Setting "Packed outputs" in the Automation Studio I/O configuration determines whether all bits of this register should be applied individually as data points in the Automation Studio I/O assignment ("DigitalOutput01" to "DigitalOutput0x") or whether this register should be displayed as a single USINT data point ("DigitalOutput").

| Data type | Value | Information |
|---|---|---|
| USINT | 0 to 255 | Packed outputs = On |
| | See the bit structure. | Packed outputs = Off or function model ≠ 0 - Standard. |

Bit structure:

| Bit | Name | Value | Information |
|---|---|---|---|
| 0 | DigitalOutput01 | 0 | Digital output 01 reset |
| | | 1 | Digital output 01 set |
| ... | | ... | |
| 7 | DigitalOutput08 | 0 | Digital output 08 reset |
| | | 1 | Digital output 08 set |

## 10.6 Reading the module ID

Name:
asy_ModulID

This register offers the possibility to read the module ID.

| Data type | Values |
|---|---|
| UINT | Module ID |

## 10.7 Monitoring status of the digital outputs

On the module, the output states of the outputs are compared to the target states. The control of the output driver is used for the target state.

A change in the output state resets monitoring for that output. The status of each individual channel can be read. A change in the monitoring status generates an error message.

### 10.7.1 Status of digital outputs 1 to 8

Name:
StatusInput01
StatusDigitalOutput01 to StatusDigitalOutput08

This register is used to indicate the status of digital outputs 1 to 8.

Only function model 0 - Standard:

Setting "Packed outputs" in the Automation Studio I/O configuration determines whether all bits of this register should be applied individually as data points in the Automation Studio I/O assignment ("StatusDigitalOutput01" to "StatusDigitalOutput0x") or whether this register should be displayed as a single USINT data point ("StatusInput01").

| Data type | Value | Information |
|---|---|---|
| USINT | 0 to 255 | Packed outputs = On |
| | See the bit structure. | Packed outputs = Off or function model ≠ 0 - Standard. |

Bit structure:

| Bit | Name | Value | Information |
|---|---|---|---|
| 0 | StatusDigitalOutput01 | 0 | Channel 01: No error |
| | | 1 | Channel 01:<br>• Short circuit or overload<br>• Channel switched on and missing I/O power supply<br>• Channel switched off and external voltage applied on channel |
| ... | | ... | |
| 8 | StatusDigitalOutput08 | 0 | Channel 08: No error |
| | | 1 | Channel 08: For an error description, see channel 01. |

## 10.8 Operating limit monitoring

The output supply of the module is monitored. I/O supply voltage <19.2 V is displayed as a warning.

### 10.8.1 Status of the supply voltage

Name:
asy_SupplyStatus

The status of the I/O supply voltage is mapped in this register.

| Data type | Values |
|---|---|
| USINT | See the bit structure. |

Bit structure:

| Bit | Name | Value | Information |
|---|---|---|---|
| 0 - 1 | Reserved | 0 | |
| 2 | PowerSupply01 | 0 | I/O supply above the warning level of 20.4 V |
| | | 1 | I/O supply below the warning level of 20.4 V |
| 3 - 7 | Reserved | 0 | |

## 10.9 Additional function - switch digital outputs w/ delay using switching mask

In function model 1 - Output switching, it is possible to control the digital outputs with a delay.

The OutputDelay mask can be used to activate the delay for each channel individually. The module is controlled here using a 100 µs-based timer and the Output or OutputDelayed register.

**Behavior of function model 1 - Output switching**

With a timer delay of 0:

**Output:** DigitalOutput0x bits

When the delay is changed:

The bit string for DigitalOutput0x bits is output. The timer restarts.

**Output:** DigitalOutput0x bits

After delay time has expired:

The channels whose bits are set in the mask for OutputDelay are adapted to the corresponding OutputDelayed bits.

**Output:** DigitalOutput0x bits (if Enable bit = FALSE)
OutputDelayed bits (if Enable bit = TRUE)

### Information:

**Adjusting the output and restarting the timer take place immediately after transferring the new delay, even if the previous time has not yet passed.**

### 10.9.1 Switching state of delayed digital outputs 1 to 8

Name:
DigitalOutput01Delayed to Digital08Delayed

According to the corresponding bit in the OutputDelay mask, the switching state of all digital outputs 1 to 8 are stored in the OutputDelayed bits after the delay time has expired.

| Data type | Values |
|---|---|
| USINT | See the bit structure. |

Bit structure:

| Bit | Name | Value | Information |
|---|---|---|---|
| 0 | DigitalOutput01Delayed | 0 | Digital output 01 reset |
| | | 1 | Digital output 01 set |
| ... | | ... | |
| 7 | DigitalOutput08Delayed | 0 | Digital output 08 reset |
| | | 1 | Digital output 08 set |

### Information:

**After the delay time has expired, only the channels with a bit set in the OutputDelay mask are adjusted to the OutputDelayed bits.**

### 10.9.2 Switching mask after the delay time has expired

Name:
DigitalOutput01DelayEnable to DigitalOutput08DelayEnable

These registers create the mask for OutputDelay. They define which outputs are switched to the bit string for the OutputDelayed register after the delay time has expired.

| Data type | Values |
|---|---|
| USINT | See the bit structure. |

Bit structure:

| Bit | Name | Value | Information |
|---|---|---|---|
| 0 | DigitalOutput01DelayEnable | 0 | Digital output 01 remains unchanged |
| | | 1 | Digital output 01 is toggled |
| ... | | ... | |
| 7 | DigitalOutput08DelayEnable | 0 | Digital output 08 remains unchanged |
| | | 1 | Digital output 08 is toggled |

### 10.9.3 Setting the delay

Name:
OutputDelayTime

This register can be used to set the delay in 100 µs steps.

After the delay time has expired, the digital outputs are adjusted according to the switching mask (register 6) and the delayed output pattern (register 4).

| Data type | Value |
|---|---|
| USINT | 0 to 255 (in 100 µs steps)[1)] |

1) The value 0 disables processing

## 10.10 Minimum cycle time

The minimum cycle time specifies the time up to which the bus cycle can be reduced without communication errors occurring. It is important to note that very fast cycles reduce the idle time available for handling monitoring, diagnostics and acyclic commands.

| Minimum cycle time |
|---|
| 150 µs |

## 10.11 Minimum I/O update time

The minimum I/O update time specifies how far the bus cycle can be reduced so that an I/O update is performed in each cycle.

| Minimum I/O update time |
|---|
| 150 µs |