Mobile Panel Connection box

User's Manual

Version: **1.30 (April 2009)**

Model number: **MAMPCBX-ENG**

All information contained in this manual is current as of its creation/publication. We reserve the right to change the contents of this manual without warning. The information contained herein is believed to be accurate as of the date of publication; however, Bernecker + Rainer Industrie-Elektronik Ges.m.b.H. makes no warranty, expressed or implied, with regard to the products or the documentation contained within this book. In addition, Bernecker + Rainer Industrie-Elektronik Ges.m.b.H. shall not be liable in the event of incidental or consequential damages in connection with or resulting from the furnishing, performance, or use of these products. The software names, hardware names, and trademarks used in this manual are registered by the respective companies.

Chapter 1: General information

Chapter 2: Technical data

Chapter 3: Commissioning

Chapter 4: Safety standards and requirements

Chapter 5: Standards and certifications

Accessories

Appendix A

Figure index

Table index

Model number index

Index

Chapter 1: General information 11

1. Manual history 11
2. Safety guidelines 12
   2.1 Intended use 12
   2.2 Protection against electrostatic discharges 12
      2.2.1 Packaging 12
      2.2.2 Guidelines for proper ESD handling 12
   2.3 Policy and procedures 13
   2.4 Transport and storage 13
   2.5 Installation 14
   2.6 Operation 14
      2.6.1 Protection against touching electrical parts 14
      2.6.2 Environmental conditions - dust, humidity, aggressive gases 14
      2.6.3 Programs, viruses and dangerous programs 15
3. Organization of safety notices 16
4. Guidelines 16
5. Model numbers 17

Chapter 2: Technical data 19

1. General information 19
   1.1 4MPCBX.0000-00 - Features 20
   1.2 4MPCBX.0001-00 - Features 20
2. Technical data 21
   2.1 Connection box 4MPCBX.0000-00 21
      2.1.1 Technical data 21
      2.1.2 Safety characteristics 23
      2.1.3 Dimensions 23
      2.1.4 Contents of delivery 24
   2.2 Connection box 4MPCBX.0001-00 25
      2.2.1 Technical data 25
      2.2.2 Dimensions 26
   2.3 Box cable 5CAMPB.0100-10 27
      2.3.1 Technical data 27
      2.3.2 Cable specifications 29

Chapter 3: Commissioning 31

1. Fastening the connection box 31
   1.1 4MPCBX.0000-00 - Drilling template 31
      1.1.1 Mounting position 32
   1.2 4MPCBX.0001-00 - Drilling template 32
2. Connecting / exchanging the box cable - 4MPCBX.0000-00 33
   2.1 Procedure 33
3. Mounting the switching cabinet cable - 4MPCBX.0001-00 37
4. Connecting / disconnecting a Mobile Panel 38
   4.1 Alternative connections 39

4.2 Multiple Mobile Panel units on one system 39
5. Connectivity of MP40/50 - MP100/200 40
6. E-stop wiring diagram 41
6.1 Loop resistance 41
6.2 Switching states of the E-stop circuit 41
6.3 Delivery status 42
6.4 Optional E-stop buttons 42
7. MP100/200 connection examples 43
7.1 E-stop 43
7.1.1 Connection example for safety circuits up to Category 3, PL d according to EN ISO 13849-1:2006 (Category 3 according to EN 954-1:1996) 43
7.2 Enable switch 44
7.2.1 Connection example for safety circuits up to Category 3, PL d according to EN ISO 13849-1:2006 (Category 3 according to EN 954-1:1996) 44
8. MP40/50 connection examples 45
8.1 Stop button 45
8.1.1 Connection example for safety circuits up to Category 3, PL d according to EN ISO 13849-1:2006 (Category 3 according to EN 954-1:1996) 45
8.2 Enable switch 46
8.2.1 Connection example for safety circuits up to Category 3, PL d according to EN ISO 13849-1:2006 (Category 3 according to EN 954-1:1996) 46
9. Slot ID 47
9.1 Monitoring contacts (RMx) 47
10. Additional connection possibilities 48
10.1 Current load 48

Chapter 4: Safety standards and requirements 49
1. Information regarding safety functions 49
2. Basic requirements from a safety perspective 49
3. General standards 50
3.1 Maximum number of disconnect/reconnect cycles permitted for Mobile Panel devices 50
3.2 Using the protective covers 50
3.3 Required monitoring devices 50
3.4 Requirements for project development 51
3.5 Utilization category 51
3.6 Test after opening the MP connection box 52
3.7 Regular function check of MP connection box during maintenance 53
3.8 Service life 53
3.9 Service/Cleaning 53

Chapter 5: Standards and certifications 55
1. Applicable European guidelines 55
2. Overview of standards 55
3. Emission requirements 57
3.1 Network-related emissions 58
3.2 Electromagnetic emissions 60

4. Requirements for immunity to disturbances 61
4.1 Electrostatic discharge (ESD) 63
4.2 High-frequency electromagnetic fields (HF field) 64
4.3 High-speed transient electrical disturbances (burst) 65
4.4 Surges 66
4.5 Conducted disturbances 67
4.6 Magnetic fields with electrical frequencies 68
4.7 Voltage dips, fluctuations, and short-term interruptions 69
4.8 Damped vibration 69
5. Mechanical conditions 70
5.1 Vibration operation 70
5.2 Vibration during transport 70
5.3 Shock during operation 71
5.4 Shock during transport (packaged) 71
5.5 Toppling 71
5.6 Free fall (packaged) 71
6. Climate conditions 73
6.1 Worst case operation 73
6.2 Dry heat 73
6.3 Dry cold 73
6.4 Large temperature fluctuations 74
6.5 Temperature fluctuations in operation 74
6.6 Humid heat, cyclic 74
6.7 Humid heat, constant (storage) 74
7. Safety 75
7.1 Ground resistance 75
7.2 Insulation resistance 75
7.3 High voltage 76
7.4 Residual voltage 76
7.5 Leakage current 76
7.6 Overload 76
7.7 Defective component 77
7.8 Voltage range 77
7.9 Other tests 77
8. International certifications 78
9. Standards and definitions for safety technology 79

Chapter 6: Accessories 85
1. Cable gland / screw plug 85
1.1 Order data for the company Jacob 86
1.2 Contact 86

Appendix A: 87
1. E-stop button 87
1.1 Features 87
2. Hot plug button 89

2.1 Features 89

Chapter 1 • General information

Information:

B&R does its best to keep the versions of its user's manuals as current as possible. However, the newest versions of the User's Manual can always be downloaded in electronic form (pdf) from the B&R homepage www.br-automation.com.

1. Manual history

Version	Date	Change
0.10 Preliminary	25.04.2007	- First version
1.00	04.06.2007	- Technical data for the connection box on page 21 updated. - Technical data (page 27) and cable specifications (page 29) for the box cable updated. - Section "Optional E-stop buttons" on page 42 added - Section "Connecting / exchanging the box cable - 4MPCBX.0000-00" on page 33 updated. - Section "Slot ID" on page 47 updated. - Technical data for "Hot plug button" on page 89 updated.
1.10	31.10.2007	- Safety regulations regarding environmental conditions - dust, humidity, aggressive gasses - updated. - Improvements made to the manual structure. - Standards and certifications chapter added.
1.20	17.06.2008	- Mobile Panel connection box small added (see "Connection box 4MPCBX.0001-00" on page 25). - Section "4MPCBX.0001-00 - Drilling template" on page 32 added - Section "Mounting the switching cabinet cable - 4MPCBX.0001-00" on page 37 added - Adjustments made to Standards and Certifications chapter (Note EN 50081-2 and EN 50082-2 removed). - Information on E-stop circuit loop resistance expanded.
1.30	10.03.2009	- EN62061 in chapter 5 "Standards and certifications" added. - Section "Safety categories according to EN ISO 13849-1:2006" in chapter 5 "Standards and certifications" added. - Error in image 6 "Mobile Panel box cable 5CAMPB.0100-10": Enable switch is an ST7. - Correction of manufacturer of E-stop switching element and E-stop button. - Chapter 4 "Safety standards and requirements" added. - EN 945-1:1996 expires in November. - Requirements according to EN ISO 13849-1:2006 added. - Section 2.1.2 "Safety characteristics" in chapter 2 "Technical data" added.

Table 1: Manual history

2. Safety guidelines

2.1 Intended use

Programmable logic controllers (PLCs), operating and monitoring devices (industrial PCs, Power Panels, Mobile Panels, etc.), and B&R uninterruptible power supplies have been designed, developed, and manufactured for conventional use in industry. They were not designed, developed, and manufactured for any use involving serious risks or hazards that could lead to death, injury, serious physical damage, or loss of any kind without the implementation of exceptionally stringent safety precautions. In particular, such risks and hazards include the use of these devices to monitor nuclear reactions in nuclear power plants, as well as flight control systems, flight safety, the control of mass transit systems, medical life support systems and the control of weapons systems.

2.2 Protection against electrostatic discharges

Electrical components that are vulnerable to electrostatic discharge (ESD) must be handled accordingly.

2.2.1 Packaging

- Electrical components with housing
  … do not require special ESD packaging, but must be handled properly (see "Electrical components with housing").
- Electrical components without housing
  … must be protected by ESD-suitable packaging.

2.2.2 Guidelines for proper ESD handling

Electrical components with housing

- Do not touch the contacts of connectors on connected cables.
- Do not touch the contact tips on the circuit boards.

Electrical components without housing

In addition to "Electrical components with housing", the following also applies:

- Any persons handling electrical components or devices that will be installed in the electrical components must be grounded.
- Components can only be touched on the small sides or on the front plate.
- Components should always be stored in a suitable medium (ESD packaging, conductive foam, etc.).
  Metallic surfaces are not suitable storage surfaces!

- Electrostatic discharges should be avoided on the components (e.g. through charged plastics).
- A minimum distance of 10 cm must be kept from monitors and TV sets.
- Measurement devices and equipment must be grounded.
- Measurement probes on potential-free measurement devices must be discharged on sufficiently grounded surfaces before taking measurements.

Individual components

- ESD protective measures for individual components are thoroughly integrated at B&R (conductive floors, footwear, arm bands, etc.).

The increased ESD protective measures for individual components are not necessary for our customers for handling B&R products.

2.3 Policy and procedures

Electronic devices are generally not failsafe. In the event of a failure on the programmable control system, operating or monitoring device, or uninterruptible power supply, the user is responsible for ensuring that other devices that may be connected, e.g. motors, are in a secure state.

Both when using programmable logic controllers and when using operating and monitoring devices as control systems in conjunction with a soft PLC (e.g. B&R Automation Runtime or comparable products) or a slot PLC (e.g. B&R LS251 or comparable products), the safety precautions applying to industrial control systems (e.g. the provision of safety devices such as emergency stop circuits, etc.) must be observed in accordance with applicable national and international regulations. The same applies for all other devices connected to the system, such as drives.

All tasks such as installation, commissioning, and maintenance are only permitted to be carried out by qualified personnel. Qualified personnel are persons who are familiar with the transport, mounting, installation, commissioning, and operation of the product and who have the appropriate qualifications (e.g. IEC 60364). National accident prevention guidelines must be followed.
The safety guidelines, connection descriptions (rating plate and documentation) and limit values listed in the technical data must be read carefully and must be observed before installation and commissioning.

2.4 Transport and storage

During transport and storage, devices must be protected from excessive stress (mechanical load, temperature, humidity, aggressive atmosphere, etc.).

2.5 Installation

- Installation must take place according to the documentation, using suitable equipment and tools.
- Devices must be installed without voltage applied and by qualified personnel.
- General safety regulations and nationally applicable accident prevention guidelines must be observed.
- Electrical installation must be carried out according to the relevant guidelines (e.g. line cross section, fuse, protective ground connection).

2.6 Operation

2.6.1 Protection against touching electrical parts

To operate programmable logic controllers, operating and monitoring devices, and uninterruptible power supplies, certain components must carry dangerous voltage levels of over 42 VDC. A life-threatening electrical shock could occur if you come into contact with these parts. This could result in death, severe injury or material damage.

Before turning on the programmable logic controller, the operating and monitoring devices and the uninterruptible power supply, ensure that the housing is properly grounded (PE rail). The ground connection must be established when testing the operating and monitoring devices or the uninterruptible power supply, even when operating them for only a short time.

Before turning the device on, make sure that all voltage-carrying parts are securely covered. During operation, all covers must remain closed.

2.6.2 Environmental conditions - dust, humidity, aggressive gases

Use of operating and monitoring devices (e.g. industrial PCs, power panels, mobile panels, etc.) and uninterruptible power supplies in very dusty environments should be avoided. Dust collection on the devices influences their function and, especially in systems with active cooling (fans), sufficient cooling cannot be guaranteed.

The presence of aggressive gases in the environment can also lead to malfunctions. When combined with high temperature and humidity, aggressive gases - e.g. with sulfur, nitrogen and chlorine components - start chemical processes that can damage electronic components very quickly. Signs of the presence of aggressive gases are blackened copper surfaces and cable ends on existing installations.

For operation in dusty or humid conditions, correctly installed (cutout installation) operating and monitoring devices like Automation Panel or Power Panel are protected on the front side. The rear side of all devices must be protected from dust and humidity and must be cleaned at suitable intervals.

2.6.3 Programs, viruses and dangerous programs

The system is subject to potential danger each time data is exchanged or software is installed from a data medium (e.g. diskette, CD-ROM, USB flash drive, etc.), a network connection, or the Internet. The user is responsible for assessing these dangers, implementing preventative measures such as virus protection programs, firewalls, etc. and obtaining software from reliable sources.

3. Organization of safety notices

The safety notices in this manual are organized as follows:

Safety notice	Description
Danger!	Disregarding the safety regulations and guidelines can be life-threatening.
Caution!	Disregarding the safety regulations and guidelines can result in severe injury or major damage to material.
Warning!	Disregarding the safety regulations and guidelines can result in injury or damage to material.
Information:	Important information for preventing errors.

Table 2: Organization of safety notices

4. Guidelines

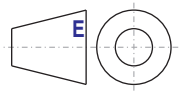

All dimension diagrams (e.g. dimension diagrams, etc.) are drawn according to European dimension standards.

5. Model numbers

Model number	Product ID	Note
4MPCBX.0000-00	**MP connection box** Connection box for adapting the connection points for Mobile Panel devices.	
4MPCBX.0001-00	**MP connection box, small** Connection box for connecting Mobile Panel devices vertically at the connection point.	
5CAMPB.0100-10	**MP box cable, 10m PP** Box cable crossover, 10 meters long; with wire tip sleeves for connection in the switching cabinet; with plug contacts for wiring in the connection box.	

Table 3: Model numbers

Chapter 2 • Technical data

1. General information

The connection box 4MPCBX.0000-00 enables a configuration where a Mobile Panel 40/50 or Mobile Panel 100/200 can be operated at various system connection points while remaining integrated in the E-stop circuit.

The E-stop circuit remains closed, regardless of whether the Mobile Panel is connected or not. If the Mobile Panel is disconnected during operation, the E-stop circuit in the connection box is automatically closed, and no E-stop is triggered.

The connection box 4MPCBX.0001-00 enables simple vertical outlet of the switching cabinet cable, but does not feature an E-stop "Hot Plug" function.

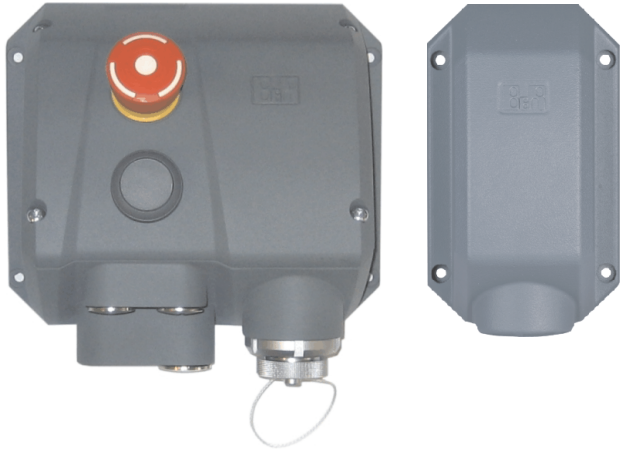

Figure 1: Connection boxes

1.1 4MPCBX.0000-00 - Features

- Compatible for connections with Mobile Panel 40/50 (limited connectivity) and Mobile Panel 100/200
- Disconnecting and connecting the Mobile Panel during operation - the E-stop circuit is not interrupted
- IP65 protection
- Classification according to EN ISO 13849-1:2006 Category 3, Performance Level (PL) d (Meets Safety Category 3 according to EN 954-1:1996)
- Circular plug with push-pull locking
- E-stop button (see also section "E-stop button" on page 87)
- Hot plug button (see also section "Hot plug button" on page 89)
- Slot ID
- Easy to use
- 4 cable outlets, vertical
- Compact dimensions
- Robust

1.2 4MPCBX.0001-00 - Features

- Enables simple vertical connection of the Mobile Panel connection cable to the switching cabinet
- IP65 protection
- Compact dimensions
- Robust

2. Technical data

2.1 Connection box 4MPCBX.0000-00

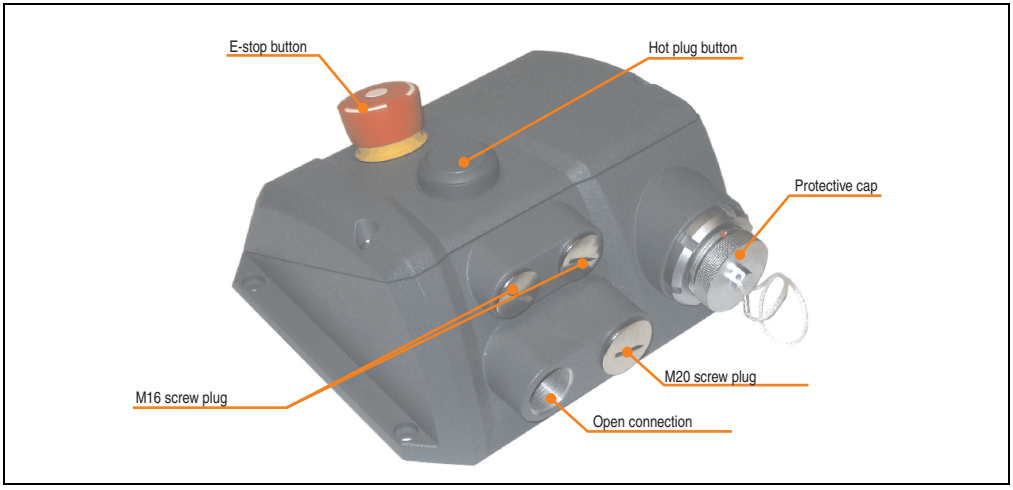

Figure 2: Connection box 4MPCBX.0000-00

2.1.1 Technical data

Features	4MPCBX.0000-00
E-stop	1 button, 2 N.C. contacts also see Appendix A, section 1 "E-stop button" on page 87
Hot plug button	1 button, 2 N.C. contacts also see Appendix A, section 2 "Hot plug button" on page 89
Push-pull plug	For connecting the Mobile Panel 40/50 or Mobile Panel 100/200 See also chapter 4 "Safety standards and requirements", section 3.1 "Maximum number of disconnect/reconnect cycles permitted for Mobile Panel devices", section 3.2 "Using the protective covers" and section 3.9 "Service/Cleaning"
Protective cap	Must be plugged in when a Mobile Panel 40/50 or Mobile Panel 100/200 is not connected
Connection positions M16 M20	 2 2

Table 4: Technical data - 4MPCBX.0000-00

Features	4MPCBX.0000-00
Connection plug, internal For the box cable (see figure "Connectors" on page 35) Additional connection possibilities (also see the section "Additional connection possibilities" on page 48)	 Key switch or push button E-stop Enable switch RS232 Power supply CAN Ethernet Slot ID (monitoring contacts) Enable switch Key switch or push button E-stop contacts Power supply
Mechanical characteristics	
Material Cover Housing Paint, color	 GK-AlSi9Mg (chill casting) GK-AlSi11Mg (chill casting) Powdered fine structure, similar to RAL7012
Dimensions Width Height Depth	 172.5 mm 158.7 mm 81.7 mm
Weight (without attachment cable)	Approx. 1.6 kg
Electrical characteristics	
Power supply Rated voltage Current requirements Power consumption	 18 to 30 VDC Typically 150 mA Approx. 2 W typical
Environmental characteristics	
Ambient temperature Operation Storage Transport	 0 to +50 °C -20 to +60 °C -20 to +60 °C
Relative humidity Operation Storage Transport	 0 to 95 %, non-condensing 0 to 95 %, non-condensing 0 to 95 %, non-condensing
Vibration Operation (continuous) Operation (occasional) Storage Transport	 2 - 9 Hz: 1.75 mm amplitude / 9 - 200 Hz: 0.5 g 2 - 9 Hz: 3.5 mm amplitude / 9 - 200 Hz: 1 g 2 - 8 Hz: 7.5 mm amplitude / 8 - 200 Hz: 2 g / 200 - 500 Hz: 4 g 2 - 8 Hz: 7.5 mm amplitude / 8 - 200 Hz: 2 g / 200 - 500 Hz: 4 g
Shock Operation Storage Transport	 15 g, 11 ms 30 g, 15 ms 30 g, 15 ms
Protection type	IP65 (only with mounted screw plugs, mounted protective cap or with connected Mobile Panel 40/50 or Mobile Panel 100/200)

Table 4: Technical data - 4MPCBX.0000-00 (cont.)

2.1.2 Safety characteristics

Criteria	Characteristic value
Maximum Performance Level (PL) acc. EN ISO 13849-1:2006	PL d
$MTTF_d$ (Mean Time To Failure - Dangerous)	> 100 years (high)
DC_{avg} (Diagnostic Coverage)	60% < DC < 90% (low)
PFH_D (Probability of Dangerous Failure per Hour)	$<6.4 \times 10^{-8}$
Service life	20 years

Table 5: Safety characteristics - 4MPCBX.0000-00

2.1.3 Dimensions

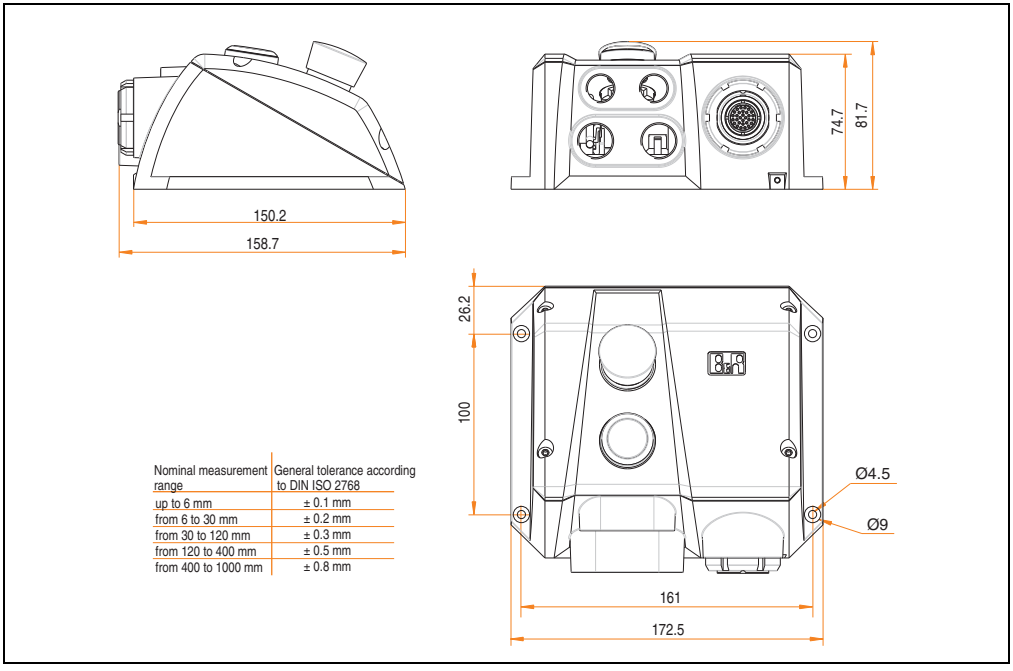

Figure 3: Connection box - 4MPCBX.0000-00

2.1.4 Contents of delivery

Amount	Component
1	Connection box 4MPCBX.0000-00
2	Screw plugs M16x1.5 (screwed on)
1	Screw plugs M20x1.5 (screwed on)
1	Protective cap plugged in (design similar to 5CAMPP.0001-10)

Table 6: Contents of delivery - 4MPCBX.0000-00

The box cable (model number 5CAMPB.0100-10, see page 27)is needed to establish the electrical connection between the switching cabinet and the connection box.

2.2 Connection box 4MPCBX.0001-00

The connection box enables simple vertical outlet of the switching cabinet cable, but does not feature an E-stop "Hot Plug" function.

Figure 4: Connection box 4MPCBX.0001-00

2.2.1 Technical data

Mechanics	4MPCBX.0001-00
Material Cover Housing Paint, color	 GK-AlSi9Mg (chill casting) GK-AlSi11Mg (chill casting) Powdered fine structure, similar to RAL7012
Dimensions Width Height Depth	 90 mm 74.2 mm 150 mm
Weight (without attachment cable)	Approx. 0.5 kg
Protection type	IP65 (only with protective cap or with connected Mobile Panel 40/50 or Mobile Panel 100/200)

Table 7: Technical data 4MPCBX.0000-01

2.2.2 Dimensions

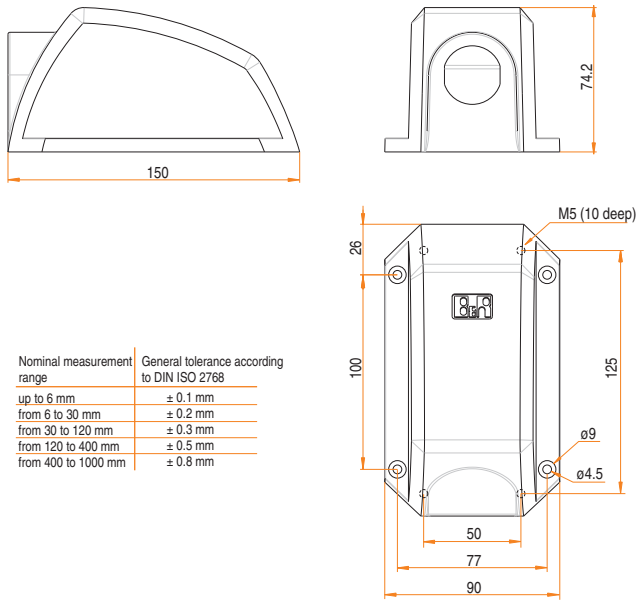

Nominal measurement range	General tolerance according to DIN ISO 2768
up to 6 mm	± 0.1 mm
from 6 to 30 mm	± 0.2 mm
from 30 to 120 mm	± 0.3 mm
from 120 to 400 mm	± 0.5 mm
from 400 to 1000 mm	± 0.8 mm

Figure 5: Dimensions - 4MPCBX.0001-00

2.3 Box cable 5CAMPB.0100-10

The box cable establishes the electrical connection between the switching cabinet and the 4MPCBX.0000-00 connection box. It includes lines for the network (Ethernet 10/100 Mbit/s), 24 VDC supply, entry devices / E-stop and key switch or push button, enable switch, serial data transfer and CAN.

The connection end has a pre-assembled RJ45 Ethernet plug. The rest of the lines have an open end with wire tip sleeves. This makes it easier to wire the cable to safety equipment and the other connections.
The box cable is installed in the connection box on the other side (connection box side). For info on exchanging and installing the box cable, see "Connecting / exchanging the box cable - 4MPCBX.0000-00" on page 33.

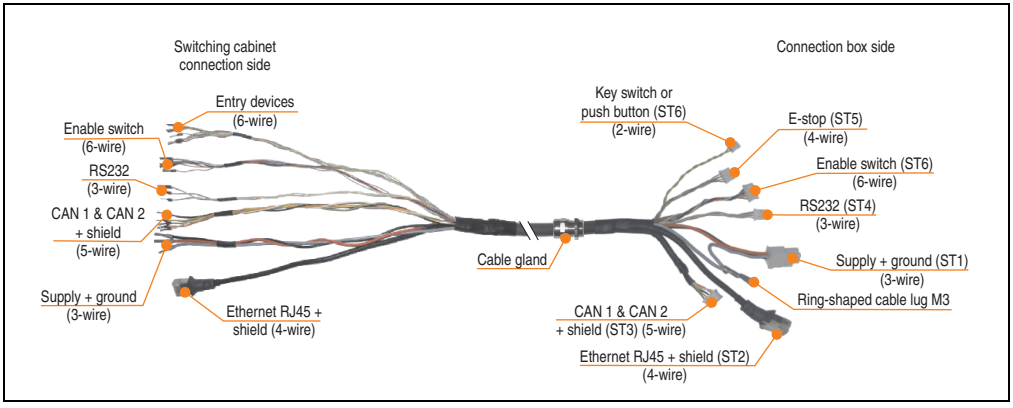

Figure 6: Mobile Panel box cable 5CAMPB.0100-10

The pin assignments for the Ethernet plug RJ45 (crossover) make it possible to connect directly to a B&R controller or to the first Ethernet connection (MDIX) on the B&R Ethernet Hub AC808 (Mod.No. 0AC808.9).
If a different Ethernet hub is used, it must support the crossover of the RX and TX lines.

The surface is protected against water, oil (lubricating and hydraulic oils according to EN60811, section 2-1) and cooling lubricant.

2.3.1 Technical data

Information:

The following characteristics, features, and limit values only apply to this individual component and can deviate from those specified for the entire device. For the entire device in which this individual component is used, refer to the data given specifically for the entire device.

Features	5CAMPB.0100-10
Length and tolerance	10 m ± 20 cm
Connector Cable gland	 Jacob GmbH, type: PERFECT 50.620 M
Cables Total diameter Weight per meter Sheathing material Flex radius One-time (fixed installation) Moving Supply lines Permissible operating voltage Material Conductor resistance Conductor 0.15mm^2 Conductor 0.75mm^2 Insulation resistance Max. tension stress Color	Hybrid cable, 25-wire 10 mm 160 g Silicon and halogen free, flame retardant PUR outer sheathing 30 mm 60 mm 30 VDC Tinned copper wires ≤ 140 Ohm/km ≤ 27 Ohm/km ≤ 500 Ohm/km 140 N Similar to RAL 7012
Cable elements Network Enable switch 2 x CAN bus Entry devices Power supply Serial connection (RxD / TxD)	 Twisted pair cable for Ethernet with shielding (10/100 Mbit/s) (4-wire) Direct connection between the enable switch and the monitoring device (6-wire) 2 pairs with shielding (5-wire) Direct connection between the entry device and the monitoring device (6-wire) Supply voltage 24 VDC and ground (3-wire) 3 wires
Environment	
Ambient temperature Stationary In motion	 -20 to +80 °C -20 to +60 °C
Standards	Flame retardant according to IEC 60332-1 and VW1 / FT1 according to C-UL Shield damping according to IEC 60096-1, amendment 2 Mechanical characteristics according to DIN VDE 0472 section 603 test type H (100000 cycles) Oil resistant, hydrolysis resistant according to DIN VDE 0282 section 10

Table 8: Technical data - Box cable 5CAMPB.0100-10

2.3.2 Cable specifications

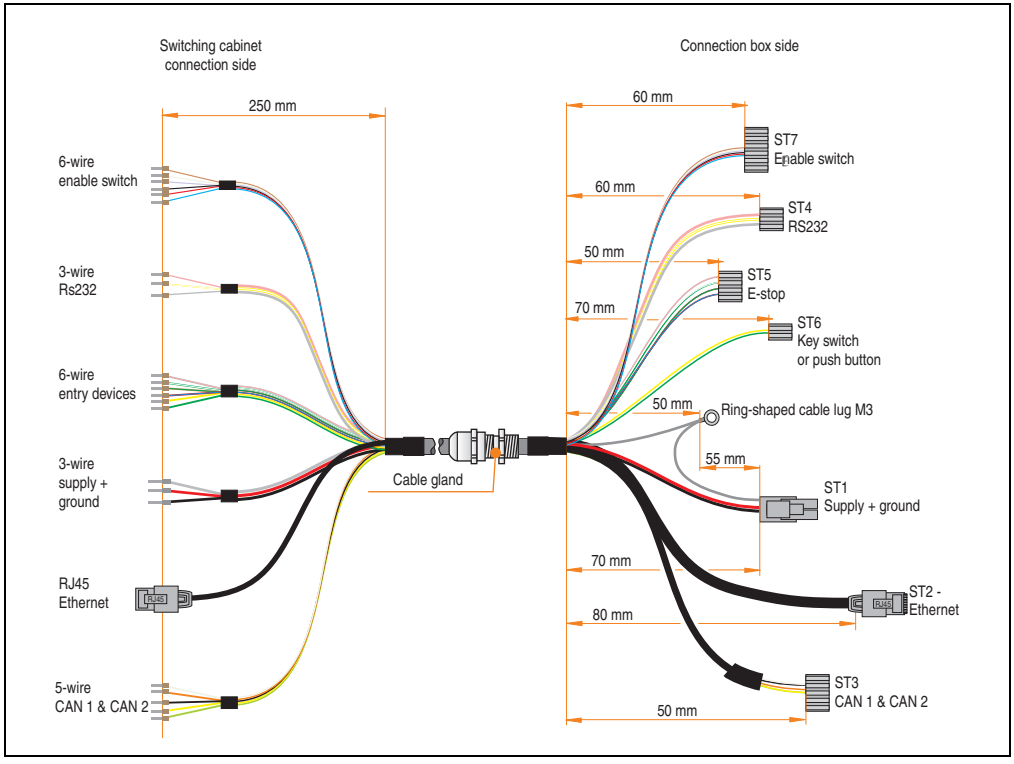

Figure 7: Cable layout for box cable 5CAMPB.0100-10

Wire colors	ST7 enable switch (connection box side)	Signal
Brown	1	C1
White	2	NO1
Purple	3	NC1
Black	4	C2
Red	5	NO2
Blue	6	NC2
Wire colors	**ST4 RS232 (connection box side)**	**Signal**
Pink	1	RxD
White-Yellow	2	RS232_GND
Gray	3	TxD

Table 9: Pin assignments for box cable 5CAMPB.0100-10

Wire colors	ST5 E-stop (connection box side) Entry devices for E-stop (connection side)		Signal
Gray-Pink	1		E-stop N.C. contact 1 (11)
Brown-Green	2		E-stop N.C. contact 2 (21)
White-Green	3		E-stop N.C. contact 1 (12)
Red-Blue	4		E-stop N.C. contact 2 (22)
Wire colors	**ST6 key switch or push button (connection box side) Entry devices for key switch or push button (connection side)**		**Signal**
Yellow	1		Button S13
Green	2		Button S14
Wire colors	**ST1 supply + ground (connection box side)**		**Signal**
Red	1		+ 24 VDC supply
Gray	2		Shielding
Black	3		Ground
-	4		n. c.
Wire colors	**ST2 Ethernet RJ45 plug (connection box side)**	**Ethernet RJ45 plug (connection side)**	**Signal**
Green	1	3	TX
Yellow	2	6	$\overline{TX}$
Pink	3	1	RX
-	4	4	n. c.
-	5	5	n. c.
Blue	6	2	$\overline{RX}$
-	7	7	n. c.
-	8	8	n. c.
Ethernet shield	Shielding	Shielding	Shielding
Wire colors	**ST3 CAN 1 & CAN 2 (connection box side)**		**Signal**
White	1		CAN 1 High
Orange	2		CAN 1 Low
Black	3		Shielding
Yellow	4		CAN 2 High
Green	5		CAN 2 Low

Table 9: Pin assignments for box cable 5CAMPB.0100-10 (cont.)

Chapter 3 • Commissioning

1. Fastening the connection box

1.1 4MPCBX.0000-00 - Drilling template

The connection box should be mounted to a flat surface using 4 screws. Drill holes for mounting (4 feed-through holes - Ø4 or 4 threaded holes - M4) should be made according to the following diagram. The screws for mounting are not included in delivery.

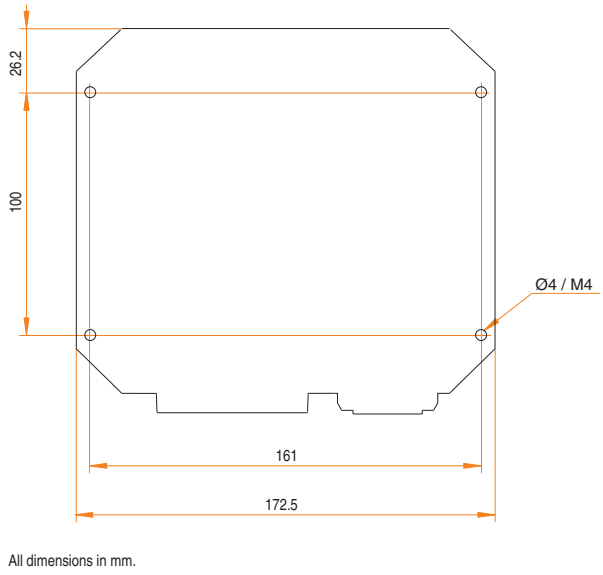

Figure 8: 4MPCBX.0000-00 - Drilling template

Information:

From a practical point of view, the connection box should be mounted vertically. From a technical point of view, there are no limitations to how it can be mounted.

1.1.1 Mounting position

The location of the connection box must be chosen in such a way so that the maximum segment length (distance between switching cabinet --> Mobile Panel) of 22 meters is not exceeded when a Mobile Panel is connected.

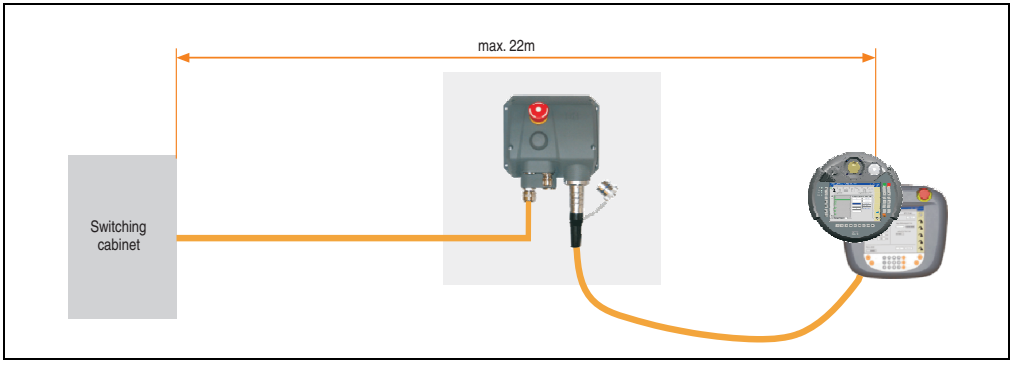

Figure 9: Mounting - maximum segment length

1.2 4MPCBX.0001-00 - Drilling template

The connection box should be mounted to a flat surface e.g. switching cabinet door using 4 screws. The connection box can be mounted on the front (4 feed-through holes - Ø4 or 4 threaded holes - M4) or back side (M5 bolts provided, 10 mm deep).

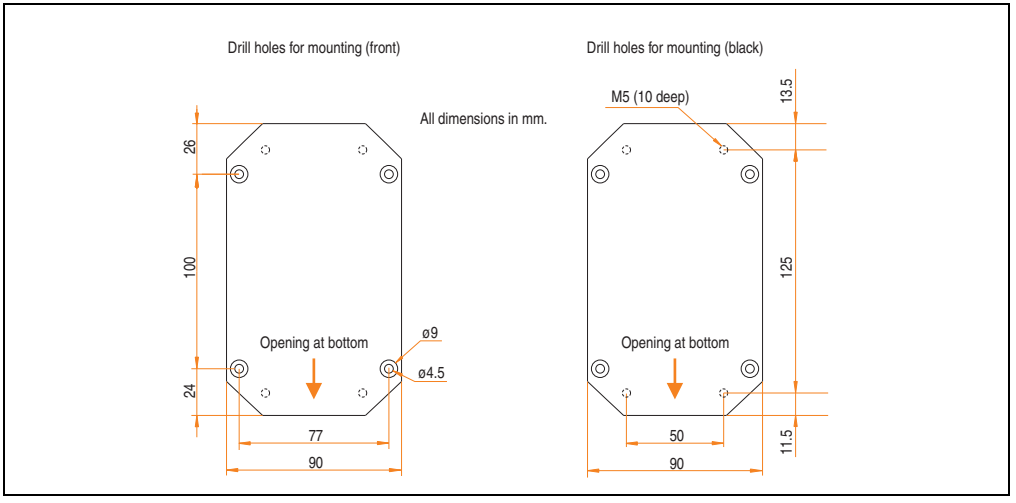

Figure 10: 4MPCBX.0001-00 - Drilling template

2. Connecting / exchanging the box cable - 4MPCBX.0000-00

Danger!

The box cable may only be exchanged by trained personnel when the Mobile Panel device and the entire system are turned off.

2.1 Procedure

1) Loosen the indicated screws on the cover (using a size 20 Torx screwdriver).

Figure 11: Remove screws

2) Open the connection box (lift cover), carefully remove the ground (1) and plug (2) using a size 10 Torx screwdriver (to make this easier, the plugs for the E-stop and hot-plug buttons (3) can also be removed, in order to remove the cover completely).

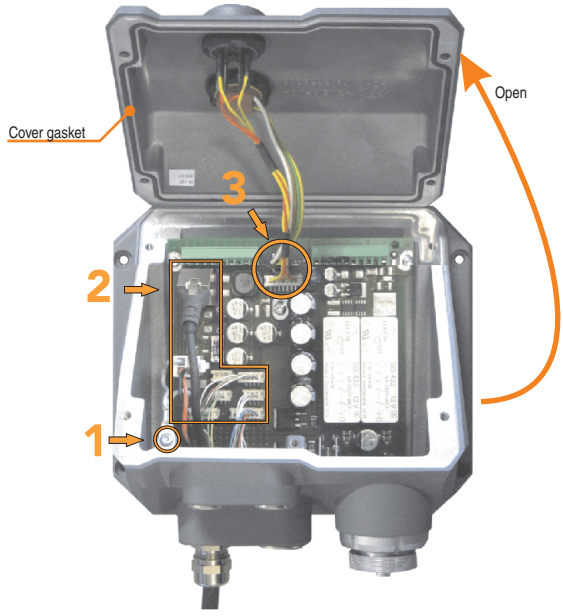

Figure 12: Disconnecting the plug

3) Open the cable gland (using the SW 20 spanner wrench) and pull the cable through the cable opening.
Carefully feed the box cable through the cable opening, plug-by-plug, and fasten the cable gland to the connection box.

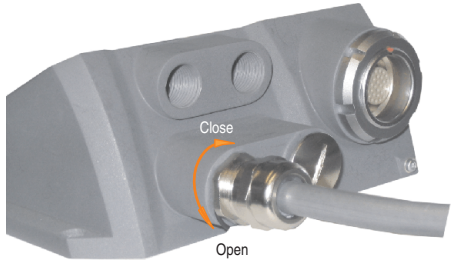

Figure 13: Exchanging the box cable

4) Connecting the Mobile Panel box cable (ST1, ST2, ST3, ST4, ST5, ST6, ST7) to the connection box. See figure 7 "Cable layout for box cable 5CAMPB.0100-10" on page 29 for connecting the cable.

Information:

The relay states can be output when the RS232 plug (ST4) is connected to the ST109. More information can be found in "Slot ID" on page 47.

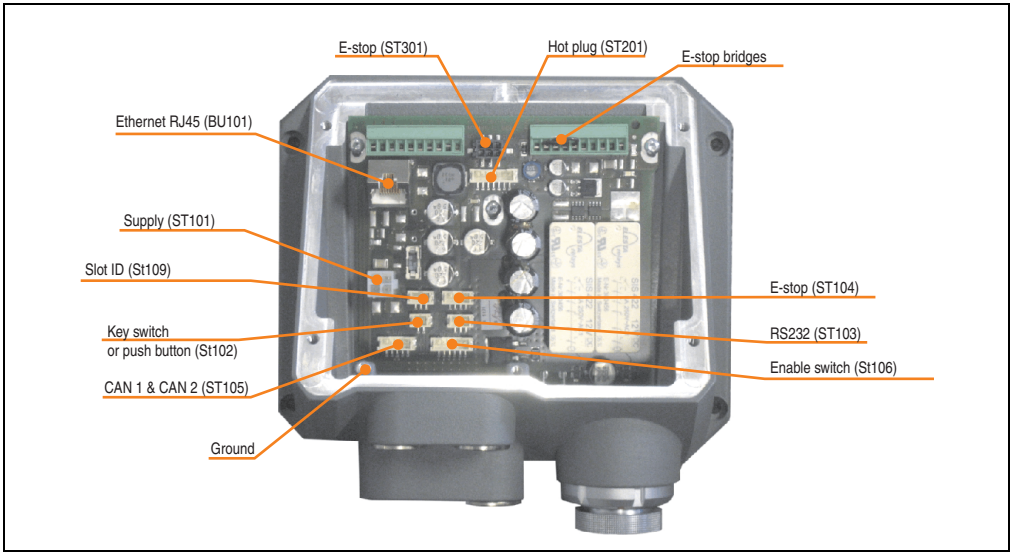

Figure 14: Connectors

Information:

When connecting the Ethernet RJ45 connector (ST2) and the power supply connector (ST1), make sure that the connector locking mechanisms are engaged.

5) Adjust the cable to the desired length in the cable gland and fasten using the cap nut (SW 20 spanner wrench).

Information:

This step is necessary for achieving IP65 protection.

6) Make sure that the cover gasket is set properly, put the connection box cover and housing back together and fasten the cover.

Information:

- **When the MP connection box is opened, it should be checked to ensure that it is fully functional, see 3.6 "Test after opening the MP connection box" on page 52.**
- **Also, the MP connection box and the safety features must be checked regularly during maintenance, see 3.7 "Regular function check of MP connection box during maintenance" on page 53.**

3. Mounting the switching cabinet cable - 4MPCBX.0001-00

1) Remove the slotted nuts on the 5CAMPC.0200-x0 switching cabinet cable and insert the end through the opening in the back.

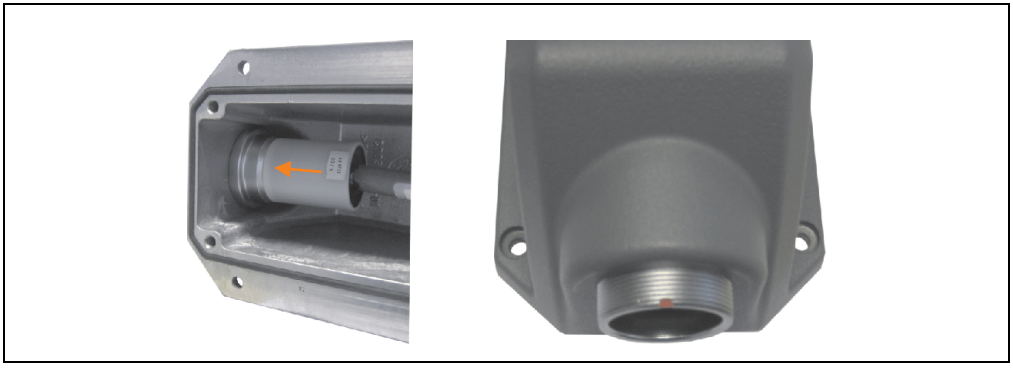

2) Put the slotted nuts back on and fasten the screws. Then the Mobile Panel can be inserted.

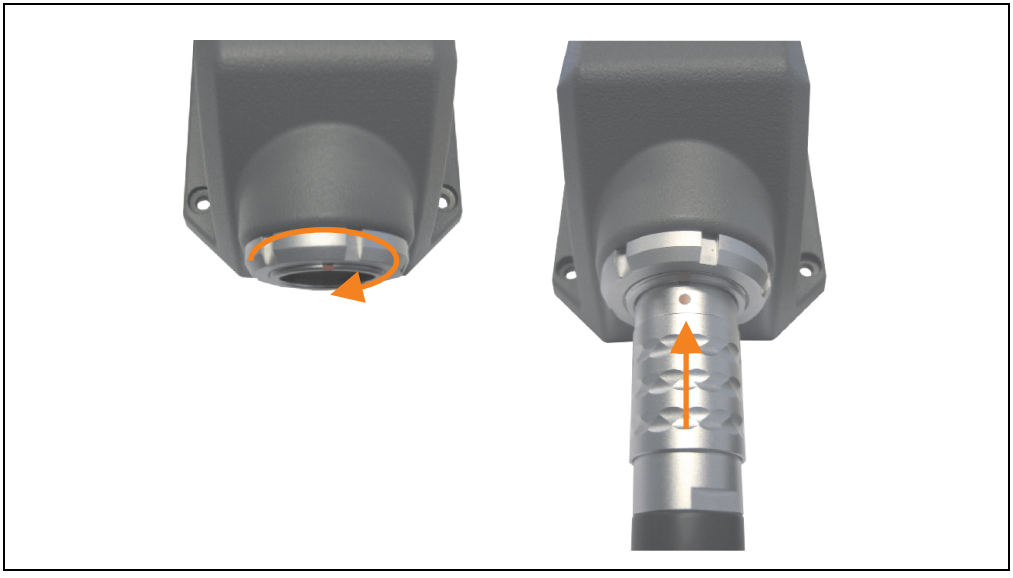

4. Connecting / disconnecting a Mobile Panel

Figure 15: Connecting / disconnecting a Mobile Panel

Warning!

- **The hot-plug button (gray button) must be pressed and held all the way down while connecting / disconnecting the Mobile Panel in order to bypass delays (approx. 100ms) caused by the relay which could trigger the E-stop.**
- **The power supply is interrupted when pressing the hot-plug button and disconnecting the Mobile Panel unit, which can result in a loss of data.**
- **Mobile Panels that are not connected must be locked away - no function of the stop button or E-stop button!**

Information:

- **We do not recommend mixing Mobile Panel units from the product series' Mobile Panel 40/50 and Mobile Panel 100/200 on the same connection box - see the section "Connectivity of MP40/50 - MP100/200" on page 40.**

Information:

For more information, such as the maximum number of disconnect/reconnect cycles permitted for the Mobile Panel devices, use of protective covers, etc. see chapter 4 "Safety standards and requirements".

4.1 Alternative connections

The Mobile Panel can be connected to different connection points on the system.

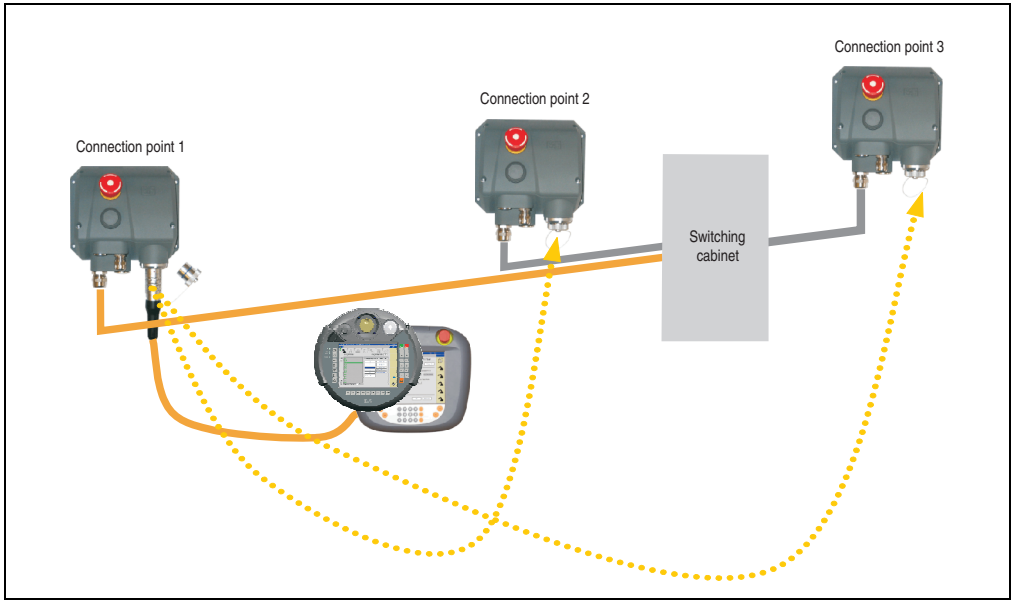

Figure 16: Alternative connections

Warning!

The power supply is interrupted after the Mobile Panel unit has been disconnected, which can result in a loss of data.

4.2 Multiple Mobile Panel units on one system

Warning!

The following points must be considered when connecting 2 or more Mobile Panel units on one system:

- **Start of E-stop or stop monitoring might be enabled unintentionally.**
- **Limited enable switch function (simultaneous pressing).**
- **Interface wiring and communication problems (CAN, termination, RS232).**
- **The product series' Mobile Panel 40/50 and Mobile Panel 100/200 cannot be mixed.**

5. Connectivity of MP40/50 - MP100/200

This table compares the existing interfaces when an MP40/50 and MP100/200 unit is connected to the connection box.

Function	MP40/50	MP100/200
Ethernet	Yes	Yes
CAN	-	Yes
RS232	-	Yes
E-stop circuit	Stop	E-stop
Enable switch	Yes	Yes
Key switch or push button	Yes	Yes
24 VDC supply	Yes	Yes

Table 10: Comparison of supported interfaces

6. E-stop wiring diagram

6.1 Loop resistance

The loop resistance of the entire E-stop circuit (measured section Mobile Panel - connection box - switching cabinet) should be less than or equal to 10 Ohm. The loop resistance value can be obtained using a loop resistance measuring device.

6.2 Switching states of the E-stop circuit

Mobile Panel	E-stop on the Mobile Panel	E-stop on the connection box	Switching state of the E-stop circuit
connected	not pressed	not pressed	The E-stop circuit remains closed.
connected	not pressed	pressed	The E-stop circuit is open. Stopping.
connected	pressed	not pressed	The E-stop circuit is open. Stopping.
connected	pressed	pressed	The E-stop circuit is open. Stopping.
not connected	-	not pressed	The E-stop circuit is fed through, and remains closed.
not connected	-	pressed	The E-stop circuit is open. Stopping.
Connection box without power (e.g: power failure)			
Mobile Panel	**E-stop on the Mobile Panel**	**E-stop on the connection box**	**Switching state of the E-stop circuit**
not connected	-	-	Stopping. Closed-circuit principle.

Table 11: Switching states of the E-stop circuit

6.3 Delivery status

The E-stop circuit is fed through to each E-stop button (MP100/200) and stop button (MP40/50). In delivery status, the double-circuit E-stop circuit in the connection box is fed through (delivery status) to the ST108 terminal block using two bridges.

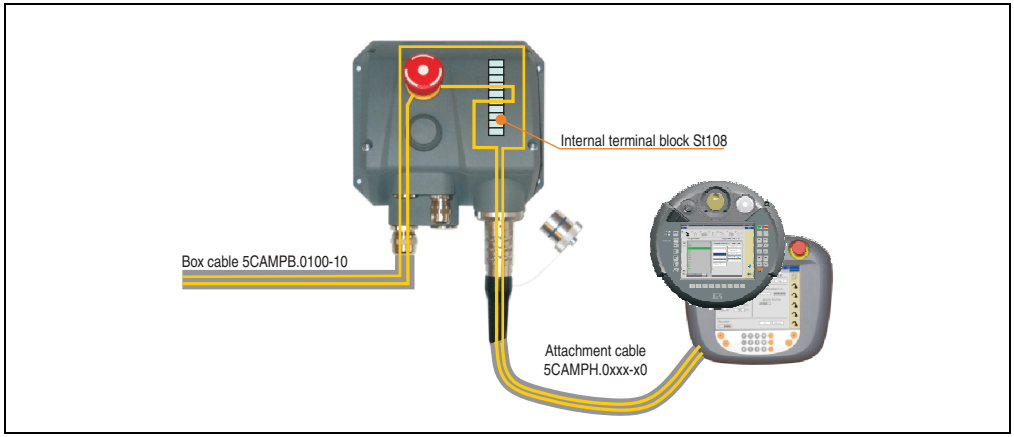

Figure 17: E-stop wiring diagram - delivery status

6.4 Optional E-stop buttons

An optional E-stop button is integrated in the E-stop circuit using the ST108 terminal block (see "Additional connection possibilities" on page 48).

The E-stop circuit is fed through to each E-stop button (MP100/200) and stop button (MP40/50).

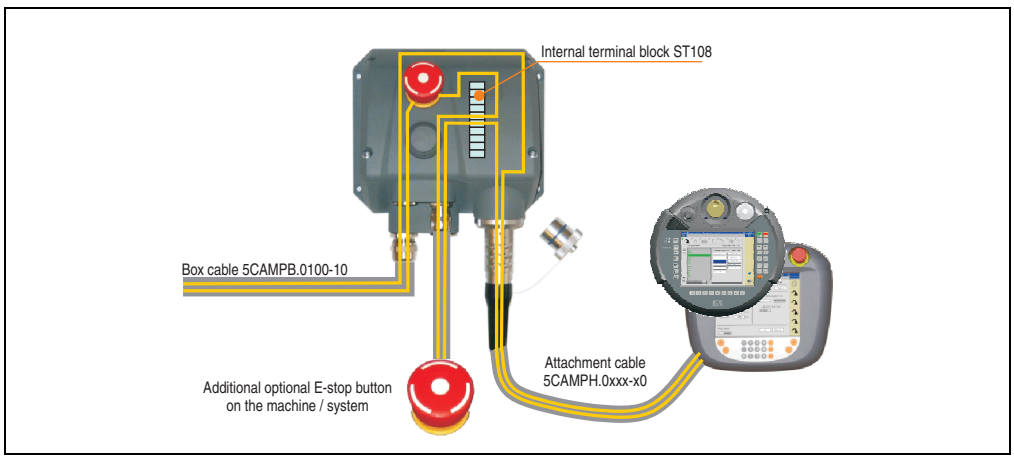

Figure 18: E-stop wiring diagram - optional E-stop button

7. MP100/200 connection examples

7.1 E-stop

7.1.1 Connection example for safety circuits up to Category 3, PL d according to EN ISO 13849-1:2006 (Category 3 according to EN 954-1:1996)

This circuit has two channels which monitor starts and detect short circuits.

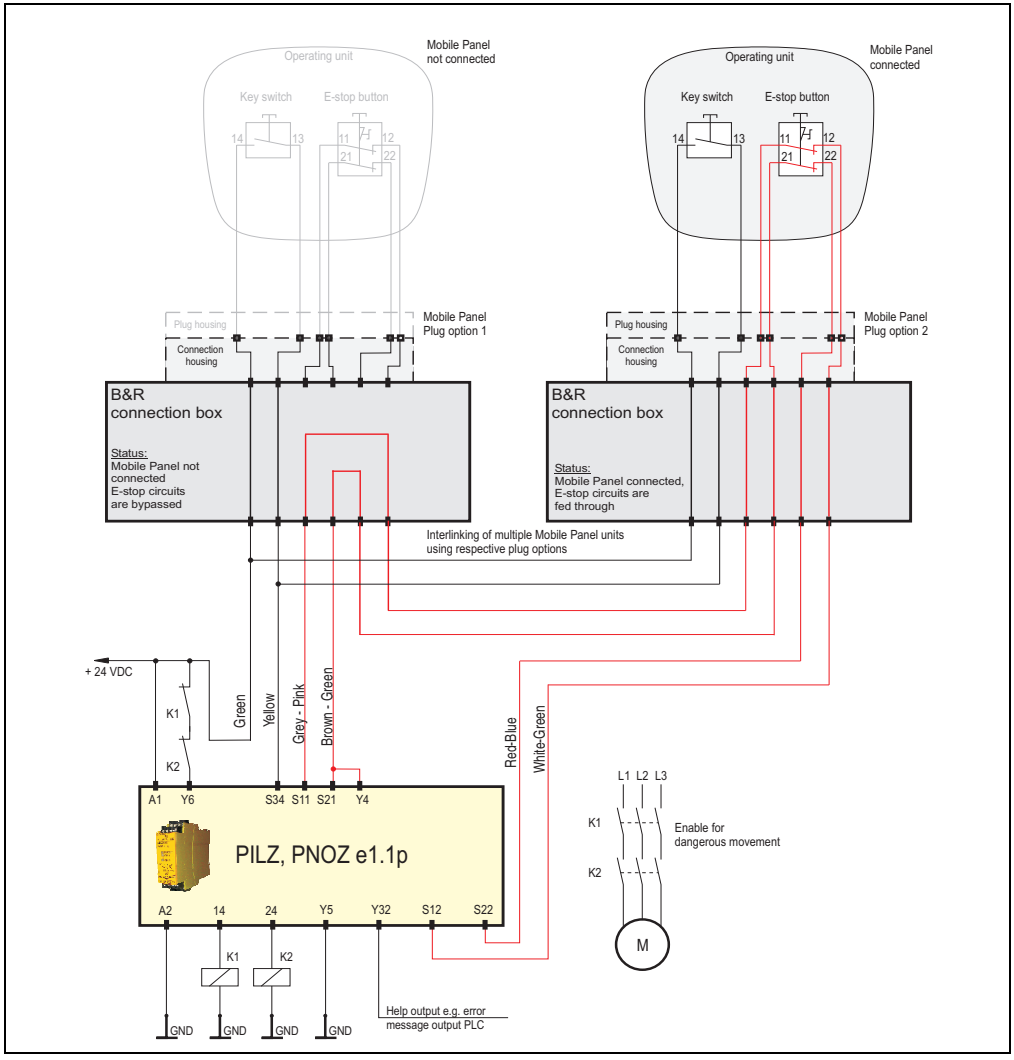

Figure 19: Connection example for MP100/200 E-stop up to Category 3, PL d according to EN ISO 13849-1:2006 (Category 3 according to EN 954-1:1996)

7.2 Enable switch

7.2.1 Connection example for safety circuits up to Category 3, PL d according to EN ISO 13849-1:2006 (Category 3 according to EN 954-1:1996)

Interlinking multiple Mobile Panel units with connection boxes.

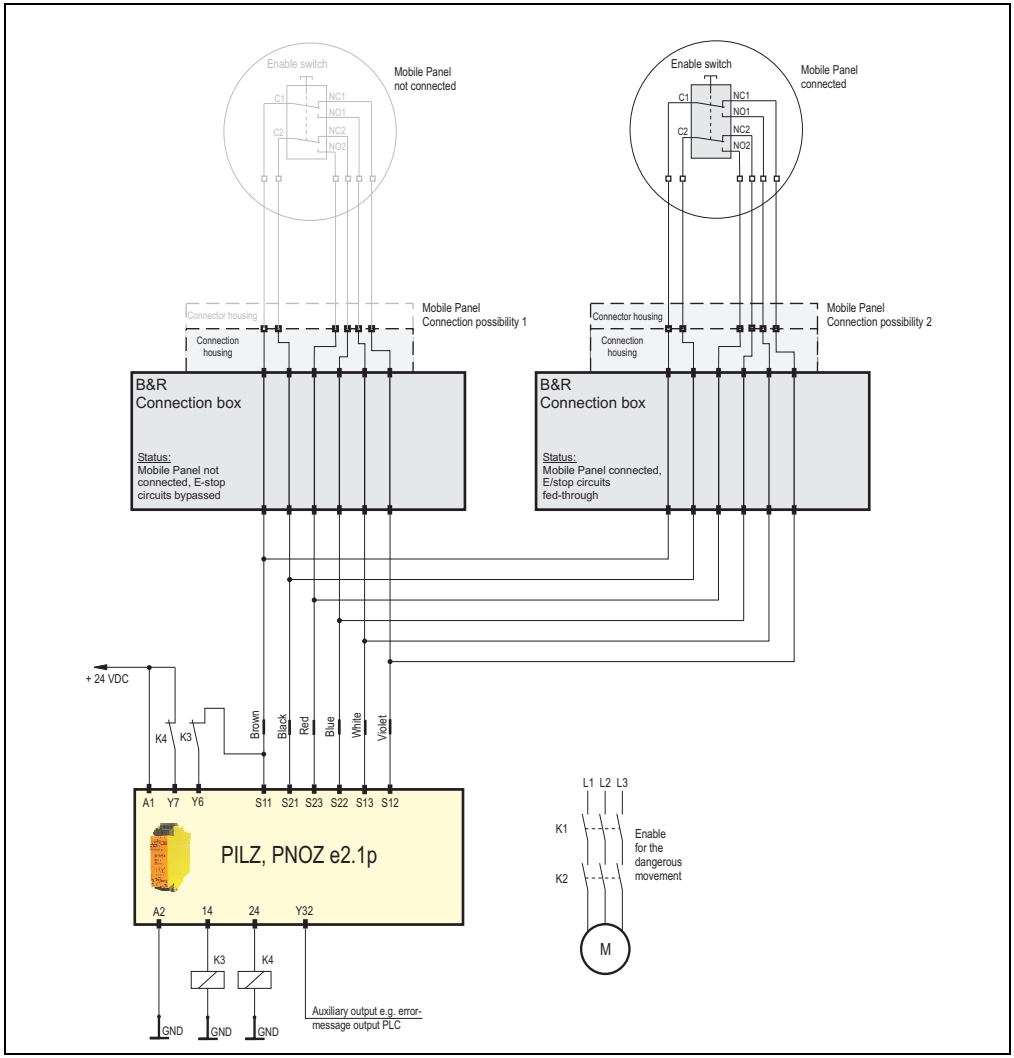

Figure 20: Connection example for MP100/200 enable switch up to Category 3, PL d according to EN ISO 13849-1:2006 (Category 3 according to EN 954-1:1996)

8. MP40/50 connection examples

8.1 Stop button

8.1.1 Connection example for safety circuits up to Category 3, PL d according to EN ISO 13849-1:2006 (Category 3 according to EN 954-1:1996)

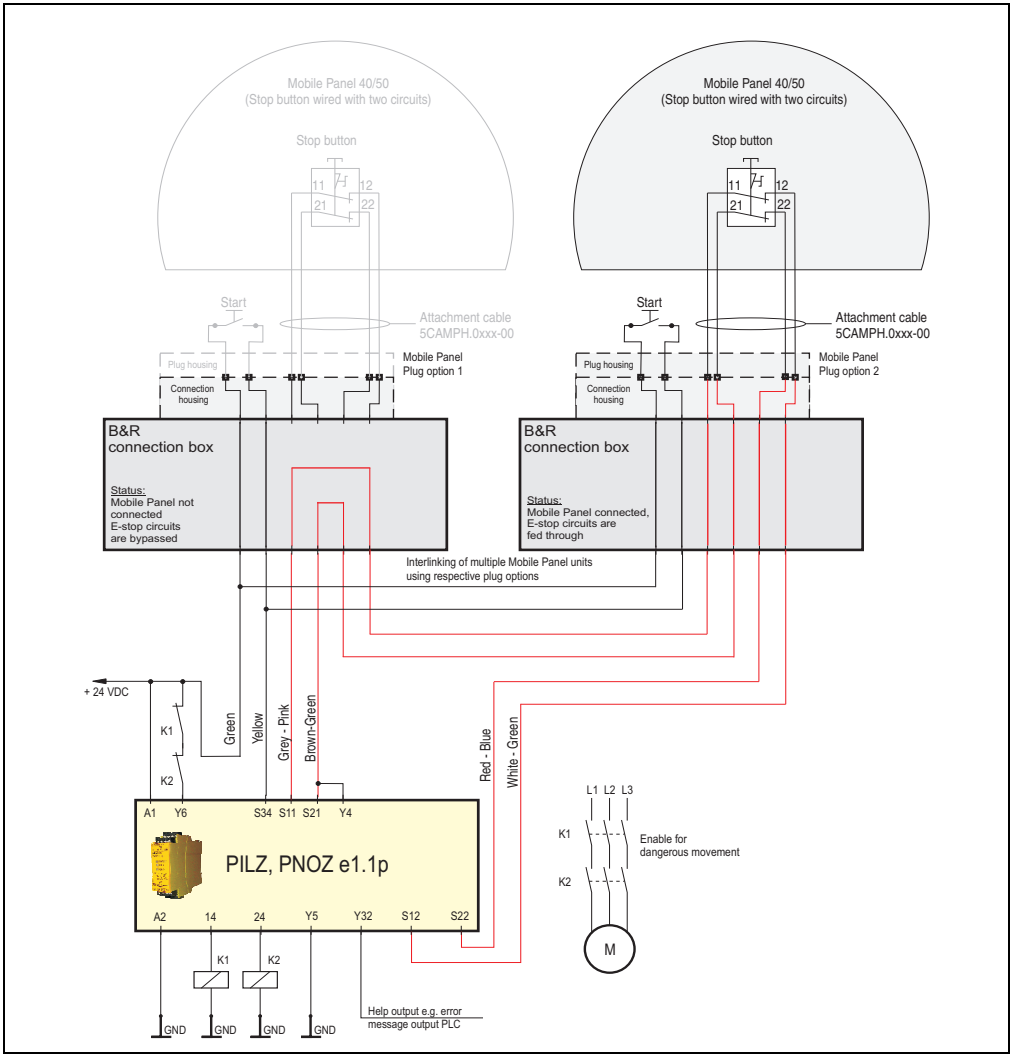

Figure 21: Connection example for MP40/50 stop button up to Category 3, PL d according to EN ISO 13849-1:2006 (Category 3 according to EN 954-1:1996)

8.2 Enable switch

8.2.1 Connection example for safety circuits up to Category 3, PL d according to EN ISO 13849-1:2006 (Category 3 according to EN 954-1:1996)

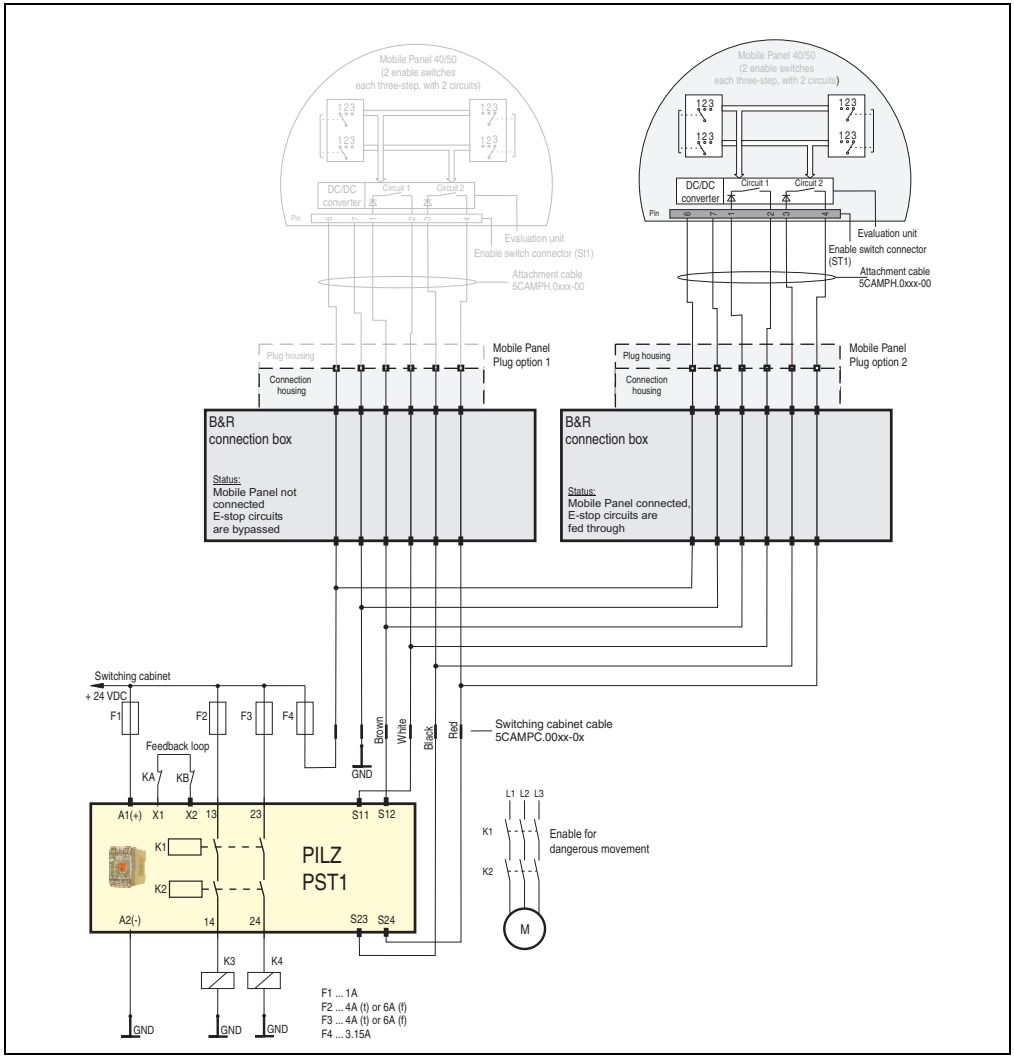

Figure 22: Connection example for MP40/50 enable switch up to Category 3, PL d according to EN ISO 13849-1:2006 (Category 3 according to EN 954-1:1996)

9. Slot ID

If a serial interface is not needed, then the plug can be used for monitoring relay states and therefore to determine at any given moment if a Mobile Panel is connected to the connection box or not. The states can be output using monitoring contacts if the RS232 plug (ST4 - from the box cable) is connected to the ST109 of the connection box.

Information:

Be careful not to confuse another plug for the ST103 when connecting the plug for relay monitoring!

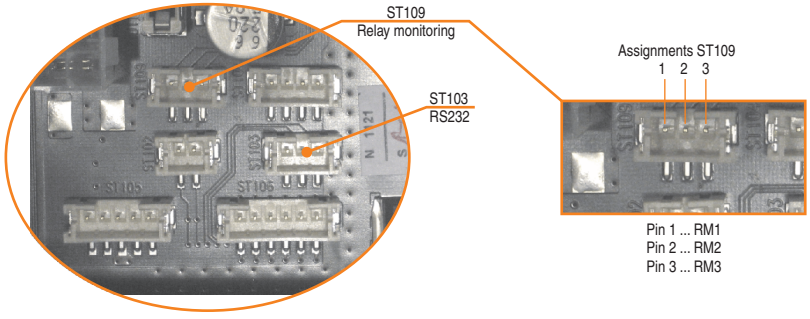

Figure 23: Relay monitoring

9.1 Monitoring contacts (RMx)

The states can also be recorded on the terminal block, monitoring contacts RM1, RM2, RM3 (see "Additional connection possibilities" on page 48).

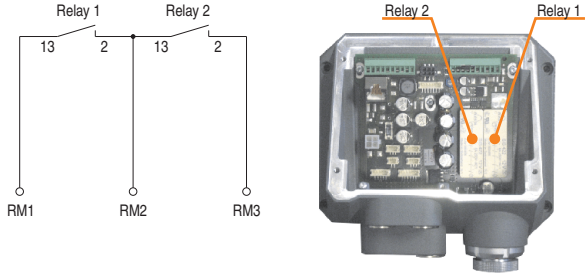

Figure 24: Monitoring contacts

No Mobile Panel unit is connected if both relay contacts are closed.

10. Additional connection possibilities

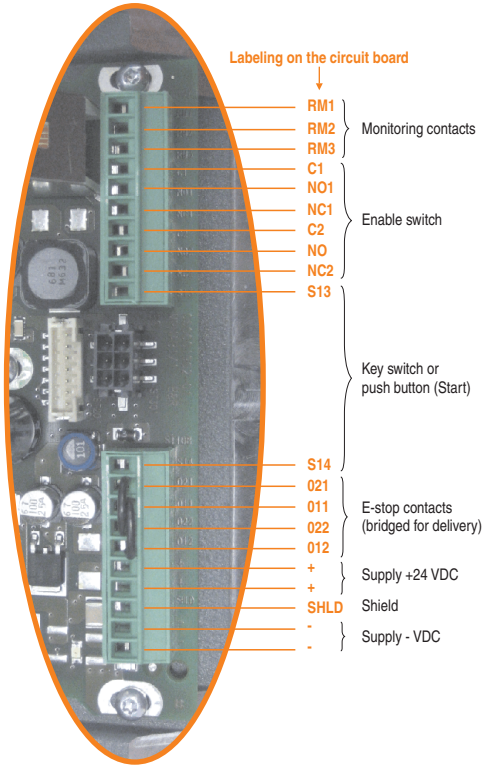

Figure 25: Additional connection possibilities

10.1 Current load

	Max. current load	Max. voltage
Monitoring contacts(RM1, RM2, RM3)	100 mA	30 VDC
Enable switch (C1, NO1, NC1, C2, NO2, NC2)	100 mA	30 VDC
Key switch or push button (S13, S14)	100 mA	30 VDC
E-stop contacts (O21, O11, O22, O12)	100 mA	30 VDC
Power supply + 24 VDC	1.5 A	30 VDC

Table 12: Current load for additional connection possibilities

Chapter 4 • Safety standards and requirements

With the expiration of EN 954-1:1996, and the already expired EN ISO 13849-2:2003 at the end of 2009, EN ISO 13849-1:2006 will take effect. This will require a corresponding evaluation according to the requirements of EN ISO 13849-1:2006. This chapter deals specifically with this topic.

1. Information regarding safety functions

The MP connection box bridges the E-stop circuit when a Mobile Panel operating unit is disconnected. These operating units are used for local operation of the machine, and with respect to safety functionality they are considered to be an independent "local control function" according to EN ISO 13849-1:2006. On the other hand, the safety functionality of the MP connection box needs to be considered separately. Due to the additional E-stop button integrated in the MP connection box, and its consideration as a safe connection, it is classified according to EN ISO 13849-1:2006 as a "Safety related stop function implemented with a safeguard".

2. Basic requirements from a safety perspective

- Basic and proven safety principles must be applied
- Closed-circuit principle – Whenever power is lost, a safe state must be reached.
- When the E-stop or stop circuit is bridged, the operating unit must not be supplied.
- Ability to monitor the bridging status / detect connections, e.g. using a PLC
- Use of recommended monitoring devices
- Adherence to project specifications
- Adherence to specified utilization category
- Regular function check of MP connection box

3. General standards

3.1 Maximum number of disconnect/reconnect cycles permitted for Mobile Panel devices

The MP switching cabinet box must be designed for 24/7 continuous operation, and it is assumed that a Mobile Panel device is disconnected/reconnected no more than once per day. In most cases, it can be assumed that a connected Mobile Panel is either permanently operated on the box, or disconnected once a day for service, set-up or diagnostics. If the Mobile Panel remains connected (e.g. for several days), this time is considered one connection cycle.

For calculating the remaining probability of error, it is therefore assumed that a device will be disconnected and reconnected an average of no more than once a day.

Information:

If the MP connection box is operated according to the results of the safety evaluation and classification, and within the limits of the approved category and required PL, an average disconnect/reconnect cycle of once per day must not be exceeded.

If Mobile Panel devices are disconnected/reconnected more than an average of once per day, this will reduce the actual service life and the maximum classification of the performance level calculated here.

3.2 Using the protective covers

If no Mobile Panel is operated on the MP connection box (socket is free), the protective cover should be placed on the socket. The same applies for the Mobile Panel itself. When it is not in use the protective cover should be placed on the plug. Important: Unplugged and unused Mobile Panel devices must be locked.

Caution!

If the protective cover for the socket is not used when no device is connected, dirt may enter the socket housing. Dust or dirt could damage the socket contacts, resulting in a loss of security function or failure of the device.

3.3 Required monitoring devices

For E-stop and enable functions, the same monitoring devices must be used as for direct operation without an MP connection box.

Information:

If the MP connection box is operated according to the results of the safety evaluation and classification, and within the limits of the approved category and required PL, the same monitoring devices are required for enable and E-stop functions as for operation without an MP connection box.

3.4 Requirements for project development

Information:

When a Mobile Panel device is operated via an MP connection box, a screen saver must not be used.

Caution!

If the MP connection box is operated according to the results of the safety evaluation and classification, and within the limits of the approved category and required PL, an illuminated display indicates to the user that the connected Mobile Panel device has been detected properly and that the E-stop button is available.

When a Mobile Panel device is connected via an MP connection box, the Mobile Panel display must be turned on in order for the user to know that the device has been detected properly, that the E-stop safety circuits are not bridged in the MP connection box, and that the E-stop button on the Mobile Panel device is an active part of the E-stop circuit (and functional).

A Mobile Panel display that is turned off therefore always indicates that the safety function is not available! If this problem occurs, the safety equipment on the operating unit (E-stop button and enable switch) are disabled. The safety-critical area must be vacated immediately, and all relevant safety equipment must be tested.

3.5 Utilization category

Regardless of whether Mobile Panel devices are operated with or without an MP connection box, the utilization category AC12/DC12 must be met.

Information:

The safety elements (enable switch and E-stop button) are only permitted up to utilization category AC12/DC12.

3.6 Test after opening the MP connection box

When the connection box has been opened, e.g. for installation or commissioning, it must be closed properly and all functions must be checked.

The following safety functions and equipment on the MP connection box must be tested:

Test for intended functionality

- **Pressing the E-stop button on the MP connection box with the Mobile Panel either disconnected or connected must interrupt the upstream safety circuit and initiate a safe shutdown.**
- **When the Mobile Panel device is connected, the supply must be switched through and the Mobile Panel device must turn on**
- **Pressing the E-stop button on the connected Mobile Panel device must interrupt the upstream safety circuit and initiate a safe shutdown.**
- **With a Mobile Panel device connected, the enable switch must be checked for proper functionality.**
- **With a Mobile Panel device connected, the enable switch must be checked for proper functionality. The enable switch serves as a release to protect against automatic restarts after a safety function (E-stop) is activated.**
- **When the hot-plug button is pressed, the power supply to the connected Mobile Panel must be shut off, and its display should go dark (see 5.3.4 Requirements for project development).**
- **The hot-plug button will have no effect if there is no Mobile Panel device attached.**
- **When a device is disconnected/reconnected properly using the hot-plug button, the MP connection box prevents the safety circuit from being interrupted and triggering a safe shutdown.**

3.7 Regular function check of MP connection box during maintenance

The MP connection box and the safety features must be checked regularly during maintenance. The function of the E-stop bridge itself is basically checked every time a device is disconnected/reconnected. If the display goes dark while the hot-plug button is pressed (see 3.4 "Requirements for project development"), proper functionality is automatically tested.

The integrated E-stop button is not checked automatically, however, since it is basically an additional safety feature. This means that the E-stop function is not tested in the course of normal operation and must be checked regularly.

During regular maintenance of the MP connection box, the following safety functions and equipment must be tested. When possible, all tests listed above (to be performed after the MP connection box has been opened) should be carried out (see 3.6 "Test after opening the MP connection box"):

Information:

- **Regardless of whether a Mobile Panel device is connected or not, pressing the E-stop button on the MP connection box must interrupt the upstream safety circuit and initiate a safe shutdown.**
- **Regular testing should involve the actual required operation of the E-stop element. If the E-stop button is never used in normal operation, it should be tested at least every three months.**

3.8 Service life

An MP connection box has an expected typical service life of 20 years.

Warning!

For elements whose T10d time (1/10 of the MTTFd) is smaller than the corresponding service life, the element must be exchanged in time.

3.9 Service/Cleaning

The connection of the MP connection box, consisting of the socket and the plug on the Mobile Panel device's attachment cable, should be cleaned regularly during maintenance in order to ensure that it functions properly. The socket and plug should be cleaned using compressed air, and a small amount of contact spray (single puff of contact spray BA100) should be applied to the contact pins in the plug. Connecting the plug to the socket automatically applies sufficient contact spray to the socket contacts.

Information:

Cleaning the contacts of the plug and socket can increase the lifespan of the connection, or the number of connection cycles.

To ensure the lifespan (number of connection cycles), the protective cover must be used.

Chapter 5 • Standards and certifications

1. Applicable European guidelines

- EMC guidelines 2004/108/EG
- Low-voltage guidelines 2006/95/EG
- Machine guidelines 98/37/EG beginning 12/29/2009: 2006/42/EG

2. Overview of standards

The connection box meets the following listed standards:

Standard	Description
EN 418	Safety of machines, E-stop equipment, functional aspects, design principles
EN 55011 Class A	Electromagnetic compatibility (EMC), radio disturbance product standard, industrial, scientific, and medical high-frequency devices (ISM devices), limit values and measurement procedure; group 1 (devices that do not create HF during material processing) and group 2 (devices that create HF during material processing)
EN 55022 Class A	Electromagnetic compatibility (EMC), radio disturbance characteristics, information technology equipment (ITE devices), limits and methods of measurement
EN 55024 Class A	Electromagnetic compatibility (EMC), immunity characteristics, information technology equipment (ITE devices), limits and methods of measurement
EN 60068-2-1	Environmental testing - part 2: Tests; test A: Cold
EN 68068-2-2	Environmental testing - part 2: Tests; test B: Dry heat
EN 60068-2-3	Environmental testing - part 2: Tests; test and guidance: Damp heat, constant
EN 60068-2-6	Environmental testing - part 2: Tests; test: Vibration (sinusoidal)
EN 60068-2-14	Environmental testing - part 2: Tests; test N: Change of temperature
EN 60068-2-27	Environmental testing - part 2: Tests; test and guidance: Shock
EN 60068-2-30	Environmental testing - part 2: Tests; test and guidance: Damp heat, cyclic
EN 60068-2-31	Environmental testing - part 2: Tests; test: Drop and topple, primarily for equipment-type specimens
EN 60068-2-32	Environmental testing - part 2: Tests; test: Free fall
EN 60204-1	Safety of machinery, electrical equipment on machines - part 1: General requirements
EN 60721-1	Classification of environmental conditions - part 1: Environmental parameters and their severities
EN 60721-3-2	Classification of environmental conditions - part 3: Classification of groups of environmental parameters and their severities, section 2: Transport

Table 13: Overview of standards

Standard	Description
EN 60721-3-3	Classification of environmental conditions - part 3: Classification of groups of environmental parameters and their severities, section 3: Stationary use at weather-protected locations
EN 61000-4-2	Electromagnetic compatibility (EMC) - part 4-2: Testing and measuring techniques; electrostatic discharge immunity test
EN 61000-4-3	Electromagnetic compatibility (EMC) - part 4-3: Testing and measuring techniques; radiated radio-frequency electromagnetic field immunity test
EN 61000-4-4	Electromagnetic compatibility (EMC) - part 4-4: Testing and measuring techniques; electrical fast transient/burst immunity test
EN 61000-4-5	Electromagnetic compatibility (EMC) - part 4-5: Testing and measuring techniques; surge immunity test
EN 61000-4-6	Electromagnetic compatibility (EMC) - part 4-6: Testing and measuring techniques; immunity to conducted disturbances, induced by radio-frequency fields
EN 61000-4-8	Electromagnetic compatibility (EMC) - part 4-8: Testing and measuring techniques; power frequency magnetic field immunity test
EN 61000-4-11	Electromagnetic compatibility (EMC) - part 4-11: Testing and measuring techniques; voltage dips, short interruptions and voltage variations immunity tests
EN 61000-4-12	Electromagnetic compatibility (EMC) - part 4-12: Testing and measuring techniques; oscillatory waves immunity test
EN 61000-6-2	Electromagnetic compatibility (EMC), generic immunity standard - part 2: industrial environment
EN 61000-6-4	Electromagnetic compatibility (EMC), generic emission standard - part 2: industrial environment
EN 61131-2 IEC 61131-2	Product standard, programmable logic controllers - part 2: Equipment requirements and tests
EN 61508-1	Functional safety of electrical/electronic/programmable electronic safety-related systems - part 1: General requirements
EN 61508-2	Functional safety of electrical/electronic/programmable electronic safety-related systems - part 2: Requirements for electrical/electronic/programmable electronic safety-related systems
EN 62061	Safety of machinery - Functional safety of safety-related electrical, electronic and programmable electronic control systems
EN 954-1	Safety of machinery – safety-related controller components - Part 1: General design principles
UL 508	Industrial control equipment (UL = Underwriters Laboratories)
47 CFR	Federal Communications Commission (FCC), 47 CFR Part 15 Subpart B Class A

Table 13: Overview of standards (cont.)

3. Emission requirements

Emissions	Test carried out according to	Limits according to
Network-related emissions	EN 55011 / EN 55022	EN 61000-6-4: Generic standard (industrial areas)
		EN 55011: Industrial product standard, scientific and medical high-frequency devices (ISM devices) class A (industrial area)
		EN 55022: Product standard equipment for Information Technology (ITE devices) class A (industrial area)
		EN 50091-2: Uninterruptible power systems (UPS), class B
		EN 61000-6-4: Generic standard (industrial areas)
		EN 55011: Industrial product standard, scientific and medical high-frequency devices (ISM devices) class A (industrial area)
		EN 55022: Product standard equipment for Information Technology (ITE devices) class A (industrial area)
		EN 61131-2: Programmable logic controllers
		EN 50091-2: Uninterruptible power systems (UPS), class A
		47 CFR Part 15 Subpart B Class A (FCC)
Electromagnetic emissions	EN 55011 / EN 55022	EN 61000-6-3: Generic standard (residential areas)
		EN 55011: Industrial, scientific, and medical (ISM) radio-frequency equipment, class B (residential areas)
		EN 55022: Information technology equipment (ITE devices), class B (residential areas)
		EN 50091-2: Uninterruptible power systems (UPS), class B
		EN 61000-6-4: Generic standard (industrial areas)
		EN 55011: Industrial product standard, scientific and medical high-frequency devices (ISM devices) class A (industrial area)
		EN 55022: Product standard equipment for Information Technology (ITE devices) class A (industrial area)
		EN 61131-2: Programmable logic controllers
		EN 50091-2: Uninterruptible power systems (UPS), class A
		47 CFR Part 15 Subpart B Class A (FCC)
Harmonic current emissions for equipment with input current ≤ 16 A per phase	EN 61000-3-2	EN 61000-3-2: Limits for harmonic current emissions (equipment input current ≤ 16 A per phase)
Voltage changes, voltage fluctuations and flicker in public low-voltage supply systems, equipment with rated current ≤ 16 A per phase, and not subject to conditional connection.	EN 61000-3-3	EN 61000-3-3: Limitation of voltage changes, voltage fluctuations and flicker in public low-voltage supply systems, equipment with rated current ≤ 16 A per phase, and not subject to conditional connection Class A/D
Voltage changes, voltage fluctuations and flicker in public low-voltage supply systems, equipment with rated current ≤ 75 A per phase, and subject to conditional connection.	EN 61000-3-11	EN 61000-3-11: Limitation of voltage changes, voltage fluctuations and flicker in public low-voltage supply systems, equipment with rated current ≤ 75 A per phase, and subject to conditional connection Class A/D

Table 14: Overview of limits and testing guidelines for emissions

3.1 Network-related emissions

Test carried out according to EN 55011 / EN 55022	Limits according to EN 61000-6-3	Limits according to EN 55011 class B	Limits according to EN 55022 class B
Power mains connections 150 kHz - 500 kHz	-	66 - 56 dB (µV) Quasi-peak value 56 - 46 dB (µV) Average	66 - 56 dB (µV) Quasi-peak value 56 - 46 dB (µV) Average
Power mains connections 500 kHz - 5 MHz	-	56 dB (µV) Quasi-peak value 46 dB (µV) Average	56 dB (µV) Quasi-peak value 46 dB (µV) Average
Power mains connections 5 MHz - 30 MHz	-	60 dB (µV) Quasi-peak value 50 dB (µV) Average	60 dB (µV) Quasi-peak value 50 dB (µV) Average
AC mains connections 150 kHz - 500 kHz	66 - 56 dB (µV) Quasi-peak value 56 - 46 dB (µV) Average	-	-
AC mains connections 500 kHz - 5 MHz	56 dB (µV) Quasi-peak value 46 dB (µV) Average	-	-
AC mains connections 5 MHz - 30 MHz	60 dB (µV) Quasi-peak value 50 dB (µV) Average	-	-
DC power I/O 150 kHz - 500 kHz	40 - 30 dB (µV) Quasi-peak value 30 - 20 dB (µV) Average	-	-
DC power I/O 500 kHz - 30 MHz	30 dB (µV) Quasi-peak value 20 dB (µV) Average	-	-
Other connections 150 kHz - 500 kHz	40 - 30 dB (µA) Quasi-peak value 30 - 20 dB (µA) Average	-	84 - 74 dB (µV) and 40 - 30 dB (µA) Quasi-peak value 74 - 64 dB (µV) and 30 - 20 dB (µA) Average
Other connections 500 kHz - 30 MHz	30 dB (µA) Quasi-peak value 20 dB (µA) Average	-	74 dB (µV) and 30 dB (µA) Quasi-peak value 64 dB (µV) and 20 dB (µA) Average
Test carried out according to EN 55011 / EN 55022	**Limits according to EN 50091-2 Class B[1)]**		
Power mains connections 150 kHz - 500 kHz	66 - 56 dB (µV) Quasi-peak value 56 - 46 dB (µV) Average	-	

Table 15: Test requirements - Network-related emissions for residential areas

Power mains connections 500 kHz - 5 MHz	56 dB (µV) Quasi-peak value 46 dB (µV) Average		
Power mains connections 5 MHz - 30 MHz	60 dB (µV) Quasi-peak value 50 dB (µV) Average		
Other connections 150 kHz - 500 kHz	Only informative for cable lengths > 10 m 40 - 30 dB (µA) Quasi-peak value 30 - 20 dB (µA) Average		
Other connections 500 kHz - 30 MHz	Only informative for cable lengths > 10 m 30 dB (µA) Quasi-peak value 20 dB (µA) Average		

Table 15: Test requirements - Network-related emissions for residential areas (cont.)

1) UPS for unrestricted operation.

Test carried out according to EN 55011 / EN 55022	Limits according to EN 61000-6-4	Limits according to EN 55011 class A	Limits according to EN 55022 class A
Power mains connections 150 kHz - 500 kHz	-	79 dB (µV) Quasi-peak value 66 dB (µV) Average	79 dB (µV) Quasi-peak value 66 dB (µV) Average
Power mains connections 500 kHz - 30 MHz	-	73 dB (µV) Quasi-peak value 60 dB (µV) Average	73 dB (µV) Quasi-peak value 60 dB (µV) Average
AC mains connections 150 kHz - 500 kHz	79 dB (µV) Quasi-peak value 66 dB (µV) Average	-	-
AC mains connections 500 kHz - 30 MHz	73 dB (µV) Quasi-peak value 60 dB (µV) Average	-	-
Other connections 150 kHz - 500 kHz	-	-	97 - 87 dB (µV) and 53 - 43 dB (µA) Quasi-peak value 84 - 74 dB (µV) and 40 - 30dB (µA) Average
Other connections 500 kHz - 30 MHz	-	-	87 dB (µV) and 43 dB (µA) Quasi-peak value 74 dB (µV) and 30 dB (µA) Average

Table 16: Test requirements - Network-related emissions for industrial areas

Test carried out according to EN 55011 / EN 55022	Limits according to EN 50091-2 class A	Limits according to EN 61131-2	Limits according to 47 CFR Part 15 Subpart B class A
Power mains connections 150 kHz - 500 kHz	79 dB (µV) Quasi-peak value 66 dB (µV) Average	-	
Power mains connections 500 kHz - 30 MHz	73 dB (µV) Quasi-peak value 60 dB (µV) Average		
AC mains connections 150 kHz - 500 kHz	-	79 dB (µV) Quasi-peak value 66 dB (µV) Average	79 dB (µV) Quasi-peak value 66 dB (µV) Average
AC mains connections 500 kHz - 30 MHz	-	73 dB (µV) Quasi-peak value 60 dB (µV) Average	73 dB (µV) Quasi-peak value 60 dB (µV) Average
Other connections 150 kHz - 500 kHz	Only informative for cable lengths > 10 m 40 - 30 dB (µA) Quasi-peak value 30 - 20 dB (µA) Average		
Other connections 500 kHz - 30 MHz	Only informative for cable lengths > 10 m 30 dB (µA) Quasi-peak value 20 dB (µA) Average		

Table 16: Test requirements - Network-related emissions for industrial areas (cont.)

3.2 Electromagnetic emissions

Test carried out according to EN 55011 / EN 55022	Limits according to EN 61000-6-3	Limits according to EN 55011 class B	Limits according to EN 55022 class B
30 MHz - 230 MHz measured at a distance of 10 m	< 30 dB (µV/m) Quasi-peak value	< 30 dB (µV/m) Quasi-peak value	< 30 dB (µV/m) Quasi-peak value
230 MHz - 1 GHz measured at a distance of 10 m	< 37 dB (µV/m) Quasi-peak value	< 37 dB (µV/m) Quasi-peak value	< 37 dB (µV/m) Quasi-peak value
Test carried out according to EN 55011 / EN 55022	**Limits according to EN 50091-2 Class B**		
30 MHz - 230 MHz measured at a distance of 10 m	< 30 dB (µV/m) Quasi-peak value		
230 MHz - 1 GHz measured at a distance of 10 m	< 37 dB (µV/m) Quasi-peak value		

Table 17: Test requirements - Electromagnetic emissions for residential areas

Test carried out according to EN 55011 / EN 55022	Limits according to EN 61000-6-4	Limits according to EN 55011 class A	Limits according to EN 55022 class A
30 MHz - 230 MHz measured at a distance of 10 m	< 40 dB (µV/m) Quasi-peak value	< 40 dB (µV/m) Quasi-peak value	< 40 dB (µV/m) Quasi-peak value
230 MHz - 1 GHz measured at a distance of 10 m	< 47 dB (µV/m) Quasi-peak value	< 47 dB (µV/m) Quasi-peak value	< 47 dB (µV/m) Quasi-peak value
Test carried out according to EN 55011 / EN 55022	**Limits according to EN 61131-2**	**Limits according to EN 50091-2 class A**	
30 MHz - 230 MHz measured at a distance of 10 m	< 40 dB (µV/m) Quasi-peak value	< 40 dB (µV/m) Quasi-peak value	
230 MHz - 1 GHz measured at a distance of 10 m	< 47 dB (µV/m) Quasi-peak value	< 47 dB (µV/m) Quasi-peak value	
Test carried out	**Limits according to 47 CFR Part 15 Subpart B class A**		
30 MHz - 88 MHz measured at a distance of 10 m	< 90 dB (µV/m) Quasi-peak value		
88 MHz - 216 MHz measured at a distance of 10 m	< 150 dB (µV/m) Quasi-peak value		
216 MHz - 960 MHz measured at a distance of 10 m	< 210 dB (µV/m) Quasi-peak value		
>960 MHz measured at a distance of 10 m	< 300 dB (µV/m) Quasi-peak value		

Table 18: Test requirements - Electromagnetic emissions for industrial areas

4. Requirements for immunity to disturbances

Immunity	Test carried out according to	Limits according to
Electrostatic discharge (ESD)	EN 61000-4-2	EN 61000-6-1: Generic standard (residential areas)
		EN 61000-6-2: Generic standard (industrial areas)
		EN 61131-2: Programmable logic controllers
		EN 55024: Information technology equipment (ITE devices)
		EN 62061: Standard for functional safety
Immunity to high-frequency electromagnetic fields (HF field)	EN 61000-4-3	EN 61000-6-1: Generic standard (residential areas)
		EN 61000-6-2: Generic standard (industrial areas)
		EN 61131-2: Programmable logic controllers
		EN 55024: Information technology equipment (ITE devices)
		EN 62061: Standard for functional safety
Immunity to high-speed transient electrical disturbances (burst)	EN 61000-4-4	EN 61000-6-1: Generic standard (residential areas)
		EN 61000-6-2: Generic standard (industrial areas)
		EN 61131-2: Programmable logic controllers
		EN 55024: Information technology equipment (ITE devices)
		EN 62061: Standard for functional safety

Table 19: Overview of limits and testing guidelines for immunity

Immunity	Test carried out according to	Limits according to
Immunity to surge voltages	EN 61000-4-5	EN 61000-6-1: Generic standard (residential areas)
		EN 61000-6-2: Generic standard (industrial areas)
		EN 61131-2: Programmable logic controllers
		EN 55024: Information technology equipment (ITE devices)
		EN 62061: Standard for functional safety
Immunity to conducted disturbances	EN 61000-4-6	EN 61000-6-1: Generic standard (residential areas)
		EN 61000-6-2: Generic standard (industrial areas)
		EN 61131-2: Programmable logic controllers
		EN 55024: Information technology equipment (ITE devices)
		EN 62061: Standard for functional safety
Immunity against magnetic fields with electrical frequencies	EN 61000-4-8	EN 61000-6-1: Generic standard (residential areas)
		EN 61000-6-2: Generic standard (industrial areas)
		EN 61131-2: Programmable logic controllers
		EN 55024: Information technology equipment (ITE devices)
		EN 62061: Standard for functional safety
Immunity to voltage dips, short-term interruptions and voltage fluctuations	EN 61000-4-11	EN 61000-6-1: Generic standard (residential areas)
		EN 61000-6-2: Generic standard (industrial areas)
		EN 61131-2: Programmable logic controllers
		EN 55024: Information technology equipment (ITE devices)
Immunity to damped vibration	EN 61000-4-12	EN 61000-6-1: Generic standard (residential areas)
		EN 61000-6-2: Generic standard (industrial areas)
		EN 61131-2: Programmable logic controllers
		EN 55024: Information technology equipment (ITE devices)

Table 19: Overview of limits and testing guidelines for immunity (cont.)

Evaluation criteria according to EN 61000-6-2 (Performance Level)

Criteria A:
The operating equipment must continue to work as intended **during** the test. There should be no interference in the operating behavior and no system failures below a minimum operating quality as defined by the manufacturer.

Criteria B:
The operating equipment must continue to work as intended **after** the test. There should be no interference in the operating behavior and no system failures below a minimum operating quality as defined by the manufacturer.

Criteria C:
A temporary function failure is permitted when the function restores itself, or the function can be restored by activating configuration and control elements.

Criteria D:
Impairment or failure of the function, which can no longer be established (operating equipment destroyed).

4.1 Electrostatic discharge (ESD)

Test carried out according to EN 61000-4-2	Limits according to EN 61000-6-2	Limits according to EN 61131-2	Limits according to EN 55024
Contact discharge to powder-coated and bare metal housing parts	±4 kV, 10 discharges, criteria B	±4 kV, 10 discharges, criteria B	±4 kV, 10 discharges, criteria B
	Limits according to EN 62061		
	±6 kV, 10 discharges, criteria A		
Test carried out according to EN 61000-4-2	**Limits according to EN 61000-6-2**	**Limits according to EN 61131-2**	**Limits according to EN 55024**
Discharge through the air to plastic housing parts	±8 kV, 10 discharges, criteria B	±8 kV, 10 discharges, criteria B	±8 kV, 10 discharges, criteria B
	Limits according to EN 62061		
	±8 kV, 10 discharges, criteria A		

Table 20: Test requirements - Electrostatic discharge (ESD)

4.2 High-frequency electromagnetic fields (HF field)

Test carried out according to EN 61000-4-3	Limits according to EN 61000-6-2	Limits according to EN 61131-2	Limits according to EN 55024
Housing, completely wired	80 MHz - 1 GHz, 10 V/m, 80% amplitude modulation with 1 kHz, length 3 seconds, criteria A	80 MHz - 1 GHz, 1.4 - 2 GHz, 10 V/m, 80% amplitude modulation with 1 kHz, length 3 seconds, criteria A 800-960 MHz (GSM), 10 V/m, pulse modulation with 50% duty cycle, criteria A	80 MHz - 1 GHz, 1.4 - 2 GHz, 3 V/m, 80% amplitude modulation with 1 kHz, length 3 seconds, criteria A
	Limits according to EN 62061		
	20 V/m (80 MHz – 1 GHz) 10 V/m (1 GHz – 2.7 GHz) 80% amplitude modulation with 1 kHz, 3 sec. duration, Criteria A		

Table 21: Test requirements - High-frequency electromagnetic fields (HF field)

4.3 High-speed transient electrical disturbances (burst)

Test carried out according to EN 61000-4-4	Limits according to EN 61000-6-2	Limits according to EN 61131-2	Limits according to EN 55024
AC power I/O	±2 kV, criteria B	-	±1 kV, criteria B
AC power inputs	-	±2 kV, criteria B	-
AC power outputs	-	±1 kV, criteria B	-
DC power I/O >10 m [1)]	±2 kV, criteria B	-	±0.5 kV, criteria B
DC power inputs >10 m	-	±2 kV, criteria B	-
DC power outputs >10 m	-	±1 kV, criteria B	-
Functional ground connections, signal lines and I/Os >3 m	±1 kV, criteria B	±1 kV, criteria B	±0.5 kV, criteria B
Unshielded AC I/O >3 m	-	±2 kV, criteria B	-
Analog I/O	±1 kV, criteria B	±1 kV, criteria B	-
Test carried out according to EN 61000-4-4	**Limits according to EN 62061**		
AC power I/O	±4 kV, Criteria A		
AC power inputs	-		
AC power outputs	-		
DC power I/O >10 m [1)]	±4 kV, Criteria A		
DC power inputs >10 m	-		
DC power outputs >10 m	-		
Functional ground connections, signal lines and I/Os >3 m	±2 kV, Criteria A		
Unshielded AC I/O >3 m	-		
Analog I/O	±2 kV, Criteria A		

Table 22: Test requirements - High-speed transient electrical disturbances (burst)

1) For EN 55024 without length limitation.

4.4 Surges

Test carried out according to EN 61000-4-5	Limits according to EN 61000-6-2	Limits according to EN 61131-2	Limits according to EN 55024
AC power I/O, L to L	±1 kV, criteria B	±1 kV, criteria B	±1 kV, criteria B
AC power I/O, L to PE	±2 kV, criteria B	±2 kV, criteria B	±2 kV, criteria B
DC power I/O, L+ to L-, >10 m	±0.5 kV, criteria B	-	-
DC power I/O, L to PE, >10 m	±0.5 kV, criteria B	-	±0.5 kV, criteria B
DC power inputs, L+ to L-	-	±0.5 kV, criteria B	-
DC power inputs, L to PE	-	±1 kV, criteria B	-
DC power outputs, L+ to L-	-	±0.5 kV, criteria B	-
DC power outputs, L to PE	-	±0.5 kV, criteria B	-
Signal connections >30 m	±1 kV, criteria B	±1 kV, criteria B	±1 kV, criteria B
All shielded cables	-	±1 kV, criteria B	-
Test carried out according to EN 61000-4-5	**Limits according to EN 62061**		
AC power I/O, L to L	±2 kV, Criteria A		
AC power I/O, L to PE	±4 kV, Criteria A		
DC power I/O, L+ to L-, >10 m	±1 kV, Criteria A		
DC power I/O, L to PE, >10 m	±2 kV, Criteria A		
DC power inputs, L+ to L-	-		
DC power inputs, L to PE	-		
DC power outputs, L+ to L-	-		
DC power outputs, L to PE	-		
Signal connections >30 m	±2 kV, Criteria A		
All shielded cables	-		

Table 23: Test requirements - Surge voltages

4.5 Conducted disturbances

Test carried out according to EN 61000-4-6	Limits according to EN 61000-6-2	Limits according to EN 61131-2	Limits according to EN 55024
AC power I/O	150 kHz - 80 MHz, 10 V, 80% amplitude modulation with 1 kHz, length 3 seconds, criteria A	150 kHz - 80 MHz, 3 V, 80% amplitude modulation with 1 kHz, length 3 seconds, criteria A	150 kHz - 80 MHz, 3 V, 80% amplitude modulation with 1 kHz, criteria A
DC power I/O	150 kHz - 80 MHz, 10 V, 80% amplitude modulation with 1 kHz, length 3 seconds, criteria A	150 kHz - 80 MHz, 3 V, 80% amplitude modulation with 1 kHz, length 3 seconds, criteria A	150 kHz - 80 MHz, 3 V, 80% amplitude modulation with 1 kHz, criteria A
Functional ground connections	0.15 - 80 MHz, 10 V, 80% amplitude modulation with 1 kHz, Length 3 seconds, criteria A	150 kHz - 80 MHz, 3 V, 80% amplitude modulation with 1 kHz, length 3 seconds, criteria A	-
Signal connections >3 m	0.15 - 80 MHz, 10 V, 80% amplitude modulation with 1 kHz, Length 3 seconds, criteria A	150 kHz - 80 MHz, 3 V, 80% amplitude modulation with 1 kHz, length 3 seconds, criteria A	150 kHz - 80 MHz, 3 V, 80% amplitude modulation with 1 kHz, criteria A
Test carried out according to EN 61000-4-6	**Limits according to EN 62061**		
AC power I/O	150 kHz - 80 MHz, 20 V, 80% amplitude modulation with 1 kHz, 3 sec. duration, Criteria A		
DC power I/O	150 kHz - 80 MHz, 20 V, 80% amplitude modulation with 1 kHz, 3 sec. duration, Criteria A		
Functional ground connections	0.15 - 80 MHz, 20 V, 80% amplitude modulation with 1 kHz, 3 sec. duration, Criteria A		
Signal connections >3 m	0.15 - 80 MHz, 20 V, 80% amplitude modulation with 1 kHz, 3 sec. duration, Criteria A		

Table 24: Test requirements - Conducted disturbances

4.6 Magnetic fields with electrical frequencies

Test carried out according to EN 61000-4-8	Limits according to EN 61000-6-2	Limits according to EN 61131-2	Limits according to EN 55024
Test direction x, test in the field of an induction coil 1 m x 1 m	30 A/m, criteria A	30 A/m, criteria A	50 Hz, 1 A/m, criteria A
Test direction y, test in the field of an induction coil 1 m x 1 m	30 A/m, criteria A	30 A/m, criteria A	50 Hz, 1 A/m, criteria A
Test direction z, test in the field of an induction coil 1 m x 1 m	30 A/m, criteria A	30 A/m, criteria A	50 Hz, 1 A/m, criteria A
Test carried out according to EN 61000-4-8	**Limits according to EN 61000-6-2**		
Test direction x, test in the field of an induction coil 1 m x 1 m	30 A/m, criteria A		
Test direction y, test in the field of an induction coil 1 m x 1 m	30 A/m, criteria A		
Test direction z, test in the field of an induction coil 1 m x 1 m	30 A/m, criteria A		

Table 25: Test requirements - Magnetic fields with electrical frequencies

4.7 Voltage dips, fluctuations, and short-term interruptions

Test carried out according to EN 61000-4-11	Limits according to EN 61000-6-2	Limits according to EN 61131-2	Limits according to EN 55024
AC power inputs	Voltage dip 70% (30% reduction), 0.5 periods, criteria B	-	Voltage dip < 5% (> 95% reduction), 0.5 half-oscillations, criteria B
AC power inputs	Voltage dip 40% (60% reduction), 5 periods, criteria C	-	Voltage dip 70% (30% reduction), 25 half-oscillations, criteria C
AC power inputs	Voltage dip 40% (60% reduction), 50 periods, criteria C	-	-
AC power inputs	Voltage interruptions < 5% (> 95% reduction), 250 periods, criteria C	-	Voltage interruptions < 5% (> 95% reduction), 250 half-oscillations, criteria C
AC power inputs	-	20 interruptions, 0.5 periods, criteria A	-
DC power inputs	-	20 interruptions for 10 ms, < UN - 15%, criterion A	-

Table 26: Test requirements - Voltage dips, fluctuations, and short-term interruptions

4.8 Damped vibration

Test carried out according to EN 61000-4-12	Limits according to EN 61131-2		
Power I/O, L to L	±1 kV, 1 MHz, repeat rate 400/seconds, length 2 seconds, connection lengths 2 m, criteria B		
Power I/O, L to PE	±2.5 kV, 1 MHz, repeat rate 400/seconds, length 2 seconds, connection lengths 2 m, criteria B		

Table 27: Test requirements - Damped vibration

5. Mechanical conditions

Vibration	Test carried out according to	Limits according to
Vibration operation	EN 60068-2-6	EN 61131-2: Programmable logic controllers
Vibration during transport	EN 60068-2-6	EN 60721-3-2 class 2M1
		EN 60721-3-2 class 2M2
		EN 60721-3-2 class 2M3
Shock during operation	EN 60068-2-27	EN 61131-2: Programmable logic controllers
		EN 60721-3-3 class 3M4
Shock during transport (packaged)	EN 60068-2-27	EN 60721-3-2 class 2M1
		EN 60721-3-2 class 2M2
Toppling	EN 60068-2-31	EN 60721-3-2 class 2M1
		EN 60721-3-2 class 2M2
		EN 60721-3-2 class 2M3
Free fall (packaged)	EN 60068-2-32	EN 61131-2: Programmable logic controllers

Table 28: Overview of limits and testing guidelines for vibration

5.1 Vibration operation

Test carried out according to EN 60068-2-6	Limits according to EN 61131-2		Limits according to EN 60721-3-3 class 3M4		
Vibration during operation: Uninterrupted duty with moveable frequency in all 3 axes (x, y, z), 1 octave per minute	10 sweeps for each axis		10 sweeps for each axis		
	Frequency	**Limit value**	**Frequency**	**Limit value**	
	5 - 9 Hz	Amplitude 3 mm	2 - 9 Hz	Amplitude 3 mm	
	9 - 150 Hz	Acceleration 1 g	9 - 200 Hz	Acceleration 1 g	

Table 29: Test requirements - Vibration during operation

5.2 Vibration during transport

Test carried out according to EN 60068-2-6	Limits according to EN 60721-3-2 class 2M1		Limits according to EN 60721-3-2 class 2M2		Limits according to EN 60721-3-2 class 2M3	
Vibration during transport: Uninterrupted duty with moveable frequency in all 3 axes (x, y, z)	10 sweeps for each axis, packaged		10 sweeps for each axis, packaged		10 sweeps for each axis, packaged	
	Frequency	**Limit value**	**Frequency**	**Limit value**	**Frequency**	**Limit value**
	2 - 9 Hz	Amplitude 3.5 mm	2 - 9 Hz	Amplitude 3.5 mm	2 - 8 Hz	Amplitude 7.5 mm
	9 - 200 Hz	Acceleration 1 g	9 - 200 Hz	Acceleration 1 g	8 - 200 Hz	Acceleration 2 g
	200 - 500 Hz	Acceleration 1.5 g	200 - 500 Hz	Acceleration 1.5 g	200 - 500 Hz	Acceleration 4 g

Table 30: Test requirements - Vibration during transport

5.3 Shock during operation

Test carried out according to EN 60068-2-27	Limits according to EN 61131-2	Limits according to EN 60721-3-3 class 3M4	
Shock during operation: Pulse (half-sine) stress in all 3 axes (x, y, z)	Acceleration 15 g, Length 11 ms, 18 shocks	Acceleration 10 g, Length 11 ms	

Table 31: Test requirements - Shock during operation

5.4 Shock during transport (packaged)

Test carried out according to EN 60068-2-27	Limits according to EN 60721-3-2 class 2M1	Limits according to EN 60721-3-2 class 2M2	Limits according to EN 60721-3-2 class 2M3
Pulse (half-sine) stress in all 3 axes (x, y, z)	Acceleration 10 g, Length 11 ms, each 3 shocks, packaged	Acceleration 30 g, Length 6 ms, each 3 shocks, packaged	Acceleration 100 g, duration 6 ms, each 3 shocks, packaged

Table 32: Test requirements - Shock during transport

5.5 Toppling

Test carried out according to EN 60068-2-31	Limits according to EN 60721-3-2 class 2M1		Limits according to EN 60721-3-2 class 2M2		Limits according to EN 60721-3-2 class 2M3	
Drop and topple	Devices: Drop/topple on each edge		Devices: Drop/topple on each edge		Devices: Drop/topple on each edge	
	Weight	**Required**	**Weight**	**Required**	**Weight**	**Required**
	<20 kg	Yes	<20 kg	Yes	<20 kg	Yes
	20 - 100 kg	-	20 - 100 kg	Yes	20 - 100 kg	Yes
	>100 kg	-	>100 kg	-	>100 kg	Yes

Table 33: Test requirements - Toppling

5.6 Free fall (packaged)

Test carried out according to EN 60068-2-32	Limits according to EN 61131-2		Limits according to EN 60721-3-2 class 2M3		Limits according to EN 60721-3-2 class 2M2		Limits according to EN 60721-3-2 class 2M3	
Free fall	Devices with delivery packaging each with 5 fall tests		Devices packaged		Devices packaged		Devices packaged	
	Weight	**Height**	**Weight**	**Height**	**Weight**	**Height**	**Weight**	**Height**
	<10 kg	1.0 m	<20 kg	1.5 m	<20 kg	1.2 m	<20 kg	1.5 m
	10 - 40 kg	0.5 m	20 - 100 kg	1.2 m	20 - 100 kg	0.5 m	20 - 100 kg	1.2 m
	>40 kg	0.25 m	>100 kg	0.5 m	>100 kg	0.25 m	>100 kg	0.5 m

Table 34: Test requirements - Toppling

Test carried out according to EN 60068-2-32	Limits according to EN 61131-2		Limits according to EN 60721-3-2 class 2M3	Limits according to EN 60721-3-2 class 2M2	Limits according to EN 60721-3-2 class 2M3
Free fall	Devices with product packaging each with 5 fall tests				
	Weight	**Height**			
	<10 kg	0.3 m			
	10 - 40 kg	0.3 m			
	>40 kg	0.25 m			

Table 34: Test requirements - Toppling (cont.)

6. Climate conditions

Temperature / humidity	Test carried out according to	Limits according to
Worst case operation	UL 508	UL 508: Industrial control equipment EN 61131-2: Programmable logic controllers
Dry heat	EN 60068-2-2	EN 61131-2: Programmable logic controllers
Dry cold	EN 60068-2-1	EN 61131-2: Programmable logic controllers
Large temperature fluctuations	EN 60068-2-14	EN 61131-2: Programmable logic controllers
Temperature fluctuations in operation	EN 60068-2-14	EN 61131-2: Programmable logic controllers
Humid heat, cyclic	EN 60068-2-30	EN 61131-2: Programmable logic controllers
Humid heat, constant (storage)	EN 60068-2-3	EN 61131-2: Programmable logic controllers

Table 35: Overview of limits and testing guidelines for temperature and humidity

6.1 Worst case operation

Test carried out according to UL 508	Limits according to UL 508	Limits according to EN 61131-2	
Worst case during operation. Operation of the device with the max. ambient temperature specified in the data sheet at the max. specified load	Max. ambient temperature (min. +40°C) for 3 hours, length 5 hours	Max. ambient temperature (min. +40°C) for 3 hours, length 5 hours	

Table 36: Test requirements - Worst case during operation

6.2 Dry heat

Test carried out according to EN 60068-2-2	Limits according to EN 61131-2		
Dry heat	1 cycle at +70°C for 16 hours, then 1 hour acclimatization and function testing, duration approx. 17 hours		

Table 37: Test requirements - Dry heat

6.3 Dry cold

Test carried out according to EN 60068-2-1	Limits according to EN 61131-2		
Dry cold	1 cycle at -40°C for 16 hours, then 1 hour acclimatization and function testing, duration approx. 17 hours		

Table 38: Test requirements - Dry cold

6.4 Large temperature fluctuations

Test carried out according to EN 60068-2-14	Limits according to EN 61131-2		
Large temperature fluctuations	3 hours at -40°C and 3 hours at +70°C, 2 cycles, then 2 hours acclimatization and function testing, duration approximately 14 hours		

Table 39: Test requirements - Large temperature fluctuations

6.5 Temperature fluctuations in operation

Test carried out according to EN 60068-2-14	Limits according to EN 61131-2		
Open devices: These can also have a housing and are installed in switching cabinets	3 hours at +5°C and 3 hours at +55°C, 5 cycles, temperature gradient 3°C / min, the unit is occasionally supplied with voltage during testing, duration approx. 30 hours		
Closed devices: These are devices whose data sheet specifies a surrounding housing (enclosure) with the corresponding safety precautions	3 hours at +5°C and 3 hours at +40°C, 5 cycles, temperature gradient 3°C / min, the unit is occasionally supplied with voltage during testing, duration approx. 30 hours		

Table 40: Test requirements - Temperature fluctuations in operation

6.6 Humid heat, cyclic

Test carried out according to EN 60068-2-30	Limits according to EN 61131-2		
Alternating climate	24 hours at 25°C / +55°C and 97% / 83% RH, 2 cycles, then 2 hours acclimatization and function/insulation testing, duration approx. 50 hours		

Table 41: Test requirements - Humid heat, cyclic

6.7 Humid heat, constant (storage)

Test carried out according to EN 60068-2-3	Limits according to EN 61131-2		
Humid heat, constant (storage)	48 hours at +40°C and 92.5% RH, then insulation test within 3 hours, duration approximately 49 hours		

Table 42: Test requirements - Humid heat, constant (storage)

7. Safety

Safety	Test carried out according to	Limits according to
Ground resistance	EN 61131-2	EN 60204-1: Electrical equipment of machines
		EN 61131-2: Programmable logic controllers
Insulation resistance		EN 60204-1: Electrical equipment of machines
High voltage	EN 60060-1	EN 61131-2: Programmable logic controllers
		UL 508: Industrial control equipment
Residual voltage	EN 61131-2	EN 60204-1: Electrical equipment of machines
		EN 61131-2: Programmable logic controllers
Leakage current		VDE 0701-1: Service, changes and testing of electrical devices
Overload	UL 508	EN 61131-2: Programmable logic controllers
		UL 508: Industrial control equipment
Simulation component defect	UL 508	EN 61131-2: Programmable logic controllers
		UL 508: Industrial control equipment
Voltage range		EN 61131-2: Programmable logic controllers

Table 43: Safety

7.1 Ground resistance

Test carried out according to EN 61131-2	Limits according to EN 60204-1		Limits according to EN 61131-2
Ground resistance: housing (from any metal part to the ground terminal)	Smallest effective cross section of the protective ground conductor for the branch being tested	Maximum measured voltage drop at a test current of 10 A	Test current 30 A for 2 min, < 0.1 Ohm
	1.0 mm²	3.3 V	
	1.5 mm²	2.6 V	
	2.5 mm²	1.9 V	
	4 mm²	1.4 V	
	>6 mm²	1.0 V	

Table 44: Test requirements - Ground resistance

7.2 Insulation resistance

Test carried out	Limits according to EN 60204-1		
Insulation resistance: Main circuits to protective ground conductor	> 1 MOhm at 500 VDC		

Table 45: Test requirements - Insulation resistance

7.3 High voltage

Test carried out according to EN 60060-1	Limits according to EN 61131-2				Limits according to UL 508		
High voltage: Primary circuit to secondary circuit and to protective ground circuit (transformers, coils, varistors, capacitors and components used to protect against over-voltage can be removed before the test)	Input voltage	Test voltage			Input voltage	Test voltage	
		1.2/50 µs Voltage surge peak	**AC, 1 min**	**DC, 1 min**		**AC, 1min**	**DC, 1min**
	0 - 50 VAC 0 - 60 VDC	850 V	510 V	720 V	≤ 50 V	500 V	707 V
	50 - 100 VAC 60 - 100 VDC	1360 V	740 V	1050 V	>50 V	1000 V + 2 x U_N	(1000 V + 2 x U_N) x 1.414
	100 - 150 VAC 100 - 150 VDC	2250 V	1400 V	1950 V			
	150 - 300 VAC 150 - 300 VDC	4250 V	2300 V	3250 V			
	300 - 600 VAC 300 - 600 VDC	6800 V	3700 V	5250 V			
	600 - 1000 VAC 600 - 1000 VDC	10200 V	5550 V	7850 V			

Table 46: Test requirements - High voltage

7.4 Residual voltage

Test carried out according to EN 61131-2	Limits according to EN 60204-1	Limits according to EN 61131-2	
Residual voltage after switching off	< 60 V after 5 sec (active parts) < 60 V after 1 sec (plug pins)	< 60 V after 5 sec (active parts) < 60 V after 1 sec (plug pins)	

Table 47: Test requirements - Residual voltage

7.5 Leakage current

Test carried out according to	Limits according to VDE 0701-1		
Leakage current: Phase to ground	<3.5 mA		

Table 48: Test requirements - Leakage current

7.6 Overload

Test carried out according to UL 508	Limits according to EN 61131-2	Limits according to UL 508	
Overload of transistor outputs	50 switches, 1.5 I_N, 1 sec on / 9 sec off	50 switches, 1.5 I_N, 1 sec on / 9 sec off	

Table 49: Test requirements - Overload

7.7 Defective component

Test carried out according to UL 508	Limits according to EN 61131-2	Limits according to UL 508	
Simulation of how components in power supply became defective	Non-flammable surrounding cloth No contact with conductive parts	Non-flammable surrounding cloth No contact with conductive parts	

Table 50: Test requirements - Defective component

7.8 Voltage range

Test carried out	Limits according to EN 61131-2			
Supply voltage	Measurement value	Tolerance min/max		
	24 VDC 48 VDC 125 VDC	-15% +20%		
	24 VAC 48 VAC 100 VAC 110 VAC 120 VAC 200 VAC 230 VAC 240 VAC 400 VAC	-15% +10%		

Table 51: Test requirements - Voltage range

7.9 Other tests

Other tests	Test carried out according to	Limits according to
Protection type	-	EN 60529: Degree of protection provided by housing (IPCode)
Degree of pollution	-	EN 60664-1: Insulation coordination for equipment within low-voltage systems - part 1: Principles, requirements and tests

Table 52: Test requirements - Defective component

8. International certifications

B&R products and services comply with applicable standards. They are international standards from organizations such as ISO, IEC and CENELEC, as well as national standards from organizations such as UL, CSA, FCC, VDE, ÖVE, etc. We give special consideration to the reliability of our products in an industrial environment.

Certifications	
USA and Canada	All important B&R products are tested and listed by Underwriters Laboratories and checked quarterly by a UL inspector. This mark is valid for the USA and Canada and simplifies certification of your machines and systems in these areas.
Europe	All harmonized EN standards for the applicable guidelines are met.

Table 53: International certifications

9. Standards and definitions for safety technology

Stop functions according to IEC 60204-1/11.98 (electrical equipment for machines, part 1: general requirements)

The following three stop function categories exist:

Category	Description
0	Stop by immediately switching off the power to the machine drive elements (i.e. uncontrolled stop).
1	A controlled stop, the power to the machine drive elements remains on until the stop procedure is completed. The power is switched off after the stop is complete.
2	A controlled stop, the power to the machine drive elements is not switched off.

Table 54: Overview of stop function categories

The necessary stop functions must be determined based on a risk evaluation for the machine. Stop functions in category 0 and category 1 must be able to function regardless of the operating mode. A category 0 stop must have priority. Stop functions must have priority over assigned start functions. Resetting the stop function must never result in a dangerous state.

Emergency stops according to IEC 60204-1/11.98 (electrical equipment for machines, Part 1: general requirements)

The following requirements are valid for emergency stops in addition to the requirements for the stop functions:

- It must have priority over all other functions and operations in all operating modes.
- The power to the machine drive elements which can cause a dangerous state must be switched off as quickly as possible without creating other dangers.
- Resetting is not permitted to cause a restart.
- The E-stop function must not reduce the effectiveness of the safety equipment or of equipment with safety-related functions.
- The E-stop function must not interfere with equipment designed to free personnel from dangerous situations.

Emergency stops must be category 0 or category 1 stop functions. The stop function required must be determined based on a risk evaluation for the machine.

For emergency stop functions in stop category 0, only hard wired, electromechanical equipment can be used. Additionally, the function is not permitted to depend on electronic switching logic (hardware or software) or the transfer of commands via a communication network or data connection. [1)]

When using a category 1 stop function for the emergency stop function, it must be guaranteed that the power to the machine drive elements is completely switched off. These elements must be switched off using electromechanical equipment[1)] .

1) In accordance to the national foreword for the valid German version of IEC 60204-1/11.98, it is determined that electronic equipment (and especially emergency stop systems) can be used regardless of the stop category, if e.g. it provides the same safety using the standards EN 954-1:2006 and/or IEC 61508 as required by IEC 60204-1.

Safety category according to EN ISO 13849-1:2006 (safety of machines - safety related parts of control systems, Part 1: General design principles)

Safety function (according to EN 13849-1:2006)	Safety integrity level - SIL (according to IEC 61508-1)	Short description	System behavior
B	-	In accordance with the applicable standards, SRP/CS devices and/or their safety equipment and components must be designed, built, selected, assembled and combined so that they can meet the expected operational requirements. Fundamental safety principles must be applied.	**Caution!** **An error can cause the safety function to fail.**
1	1	The requirements of B must be fulfilled. Reliable components and proven safety principles must be used.	**Caution!** **Errors can result in the loss of safety functions, but the probability of their occurrence is less than in Category B.**
2	1	The requirements of B must be fulfilled, and proven safety principles must be used. Safety functions must be tested at appropriate intervals by the machine controller.	**Caution!** **An error between tests can cause the safety function to fail.** **If the safety function fails, it will be recognized during the test.**
3	2	The requirements of B must be fulfilled, and proven safety principles must be used. Safety related parts must be implemented so that: • a single error in each of the parts doesn't result in a loss of safety function, and • when possible within reason, the error is detected.	**Caution!** **The safety function remains active when a single error occurs.** **Some, but not all errors are detected.** **A buildup of errors can cause the safety function to fail.**
4	3	The requirements of B must be fulfilled, and proven safety principles must be used. Safety related parts must be implemented so that: • a single error in each of the parts doesn't result in a loss of safety function, and • the single error must be detected the next time (or before) the safety function is required. If this type of detection is not possible, a buildup of errors must not cause the safety function to fail.	**Information:** **The safety function remains active when a single error occurs.** **Detection of error buildup reduces the probability of losing safety function (high DC).** **Errors are recognized in time to prevent the safety function from failing.**

Table 55: Safety category overview

The following risk graph (according to EN 13849-1:2006, Appendix A) provides a simplified procedure for risk evaluation:

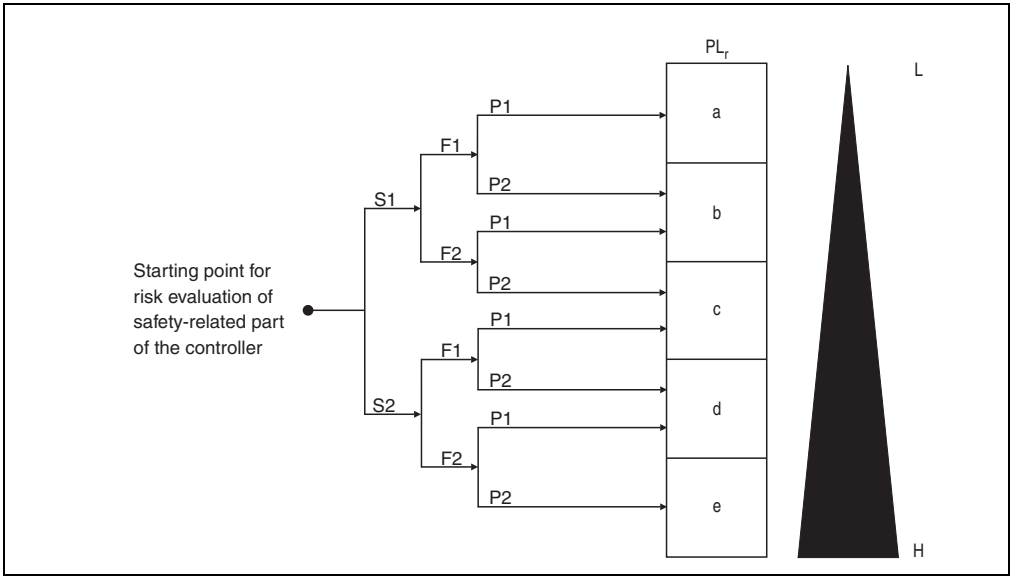

Figure 26: Risk diagram to determine the PL_r for every safety function

Parameter S ... severity of injury	
S1	Light (usually reversible) injury.
S2	Serious (normally irreversible injury or death).
Parameter F ... Frequency and/or duration of the danger exposure	
F1	Seldom-to-less-often and/or exposure time is short.
F2	Frequent-to-continuous and/or exposure time is long.
Parameter P ... possibility to circumvent the danger or limit the damage	
P1	Possible under some conditions.
P2	Nearly impossible.
Miscellaneous	
L	Low impact on risk reduction.
H	High impact on risk reduction.
PL_r	Required performance level.

Table 56: Legend for risk graph

Safety category according to EN 954-1:1996 (safety of machines - safety related parts of control systems, Part 1: general design principles) [1)]

The safety related parts of control systems must meet one or more of the requirements for five defined safety categories. The safety categories define the required behavior of safety related controller parts regarding their resistance to errors.

Safety category (according to EN 954-1:1996)	Safety integrity level - SIL (according to IEC 61508-2)	Short description	System behavior
B	-	Safety related parts must be designed and built so that they can meet the expected operational requirements. (No specific safety measures are implemented.)	**Caution!** **An error can cause the safety function to fail.**
1	1	Safety related parts must be designed and built so that only reliable components and safety principles are used. (e.g. preventing short circuits by using sufficient distances, reducing the probability of errors caused by using oversized components, defining the failure route - closed-circuit current principle, etc.)	**Caution!** **An error can cause the safety function to fail.**
2	1	Safety related parts must be designed so that their safety functions are checked in suitable intervals by the machine controller. (e.g. automatic or manual check during start-up)	**Caution!** **An error between checks can cause the safety function to fail. If the safety function fails, it will be recognized during the check.**
3	2	Safety related parts must be designed so that individual errors do not cause the safety function to fail. Individual errors should - if possible - be recognized the next time (or before) the safety function is required.	**Caution!** **The safety function remains active when an error occurs. Some, but not all errors are recognized. A buildup of errors can cause the safety function to fail.**
4	3	Safety related parts must be designed so that individual errors do not cause the safety function to fail. Individual errors must be recognized the next time (or before) the safety function is required. If this type of recognition is not possible, a buildup of errors is not permitted to cause the safety function to fail.	**Information:** **The safety function remains active when an error occurs. Errors are recognized in time to prevent the safety function from failing.**

Table 57: Safety category overview

These considerations lead to a safety category (B, 1, 2, 3, 4) that specifies how the safety-related parts on a machine must be implemented.

The safety category must be selected based on a risk evaluation. This risk evaluation is a part of the total risk evaluation for the machine.

The following risk graph (according to EN 954-1:1996, Appendix B) provides a simplified procedure for risk evaluation:

1) To prevent confusing EN 954-1:1996 categories with IEC 60204-1 stop categories, the term "safety categories" was used in the text shown above for EN 954-1:1996 categories.

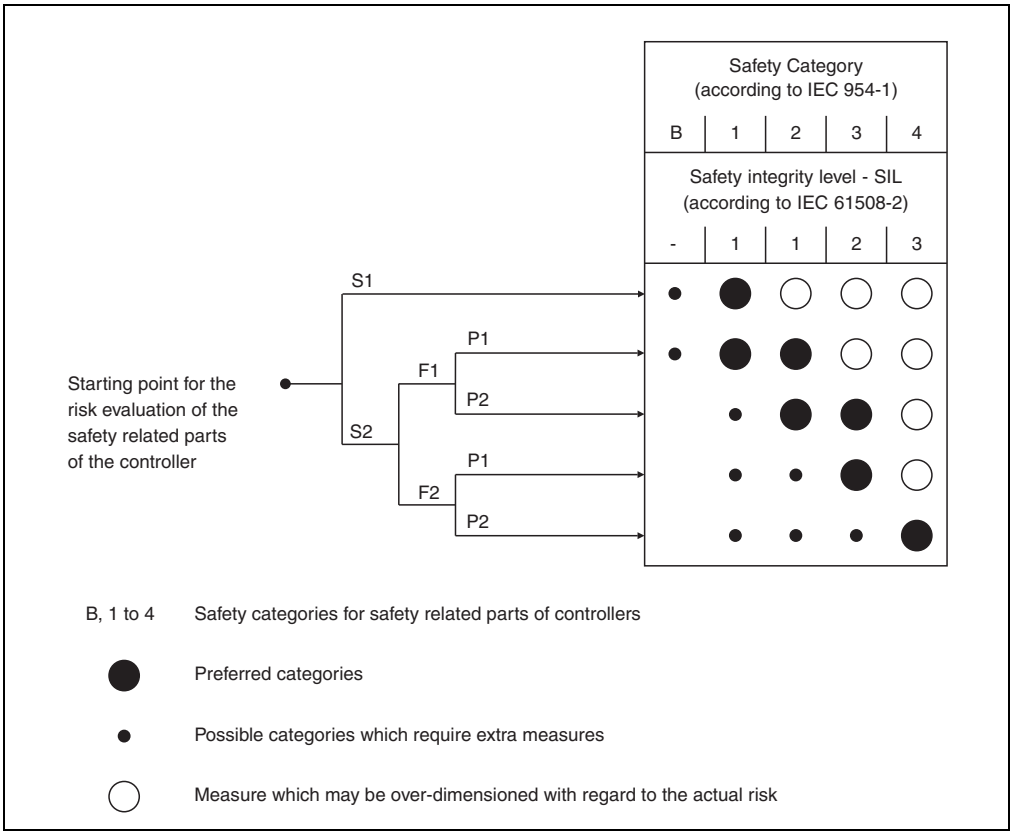

Figure 27: Risk graph according to EN 954-1:1996, Appendix B

Begin at the starting point shown and follow the parameters S, F and P to the safety category to be used.

Parameter S ... severity of injury	
S1	Light (usually reversible) injury.
S2	Serious (usually irreversible) injury.
Parameter F ... Frequency and/or duration of the danger exposure	
F1	Seldom to slightly more frequent and/or short exposure duration.
F2	Frequent to continuous and/or long exposure duration.
Parameter P ... Possibility to prevent danger	
P1	Possible under some conditions.
P2	Nearly impossible.

Table 58: Parameters S, F and P lead you to the safety category to be used

Restart inhibit according to EN 1037/04.96 (Safety of machinery - prevention of unexpected start-up)

Keeping a machine in an idle state when people are working in the danger zone is one of the most important requirements for safe operation of machines.

Starting refers to the transition of a machine or its parts from an idle state to moving state. Any start is unexpected if it is caused by:

- A start command sent because of a controller failure or because of external influences on the controller.
- A start command sent because of incorrect operation of a start element or another part of the machine.
- Restoration of power supply after an interruption.
- External/internal influences on parts of the machine.

To prevent unexpected starting of machines or parts of machines, power should be removed and dissipated. If this is not practical (e. g. frequent, short work in danger zone), other measures must be taken:

- Measures to prevent random start commands.
- Measures to prevent that random start commands cause unexpected starting.
- Measures to automatically stop dangerous parts of the machine before a dangerous situation can be caused by unexpected starting.

Chapter 6 • Accessories

1. Cable gland / screw plug

B&R uses and recommends the following cable glands and screw plugs from the company Jacob GmbH for safely closing a drilled hole that is not being used or connecting the box cable to the connection box. Other metric cable gland / screw plugs can also be used as long as they ensure IP65 protection.

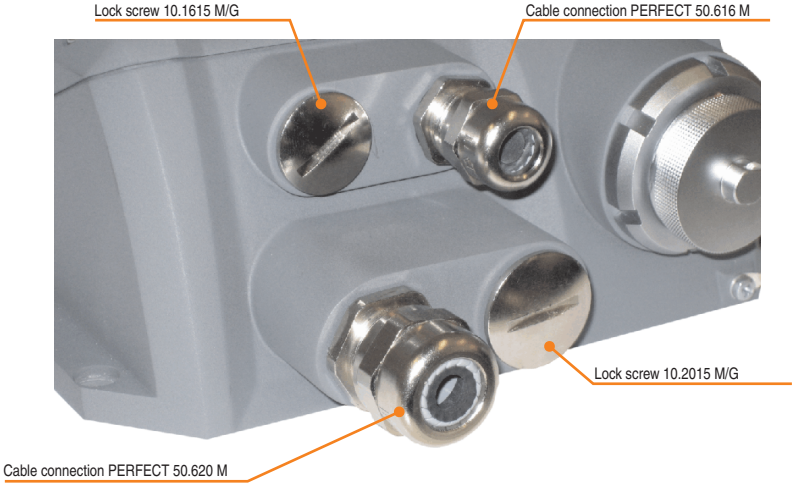

Figure 28: Cable gland / screw plug

1.1 Order data for the company Jacob

Cable gland	Quantity	Manufacturer	Characteristics
PERFECT 50.616 M	M16x1.5	Jacob GmbH	integrated stress relief, anti-twist, large sealed and clamping area, easy mounting, Temperature range -20°C / +100°C IP68 protection
PERFECT 50.620 M	M20x1.5		
Screw plug			
10.1615 M/G	M16x1.5	Jacob GmbH	Temperature range -30°C / +100°C IP65 / IP 68 protection
10.2015 M/G	M20x1.5		

Table 59: Order data for cable gland / screw plug

1.2 Contact

Jacob GmbH
Electro-technical Factory
Gottlieb-Daimler-Str. 11
71394 Kernen
Germany

Telephone: +49 (0)7151 4011-0
Fax: +49 (0)7151 4011-49
e-mail: jacob@jacob-gmbh.de
Web: **www.jacob-gmbh.de**

Appendix A

1. E-stop button

The E-stop unit consists of an E-stop switching element and an E-stop button.

E-stop button

Figure 29: E-stop entry device

1.1 Features

- 2 N.C. (2-channel)
- Positive opening contacts
- Manipulation-proof in accordance to EN 418 and EN 61204
- Protection against blocking
- Removal by 1/4 turning of the tappet
- Housing protection IP65 according to IEC60529
- Function independent of whether the device is connected or not

Information:

The following characteristics, features, and limit values only apply to this individual component and can deviate from those specified for the entire device. For the entire device in which this individual component is used, refer to the data given specifically for the entire device.

Property	E-stop switching element	E-stop button
Manufacturer Type	EAO 22FS switching element E-stop, 2 N.C. contacts	EAO 22FS E-stop, not illuminated
Operating voltage AC/DC	Max. 120 V	-
Operating current AC/DC	Max. 550 mA	-
Contact system	Self-cleaning bridge contact	-
Standards N/C contact Weathering resistance Salt mist Protection (front side) Approbations	 Positive opening contact according to IEC 947-5-1 - - - -	 - According to IEC 68-1-2, 2-2 and 2-30 According to IEC 68-2-11 IP65 IEC 947, 1058; UL 508;CSA 22.2; EU-NSR 73/23; Ulc
Impact resistance	At least 100 N	
Operating force	Approx. 5 N per contact element	-
Lifespan	1 million actuations at 10 mA/24 VDC	50000 actuations
Ambient temperature Operation Storage Transport	 -25 to +70 °C -40 to +80 °C -40 to +80 °C	

Table 60: Technical data - E-stop switching element and E-stop button

2. Hot plug button

The hot-plug button is part of the connection box. It consists of a switching element (2 N.C.) and a cap.

Hot-plug button switching element

Hot-plug button protective cap (operating element)

Figure 30: Hot plug button

2.1 Features

- 2 N.C. (2-channel)
- Positive opening contacts
- Housing protection IP65 according to IEC60529

Information:

The following characteristics, features, and limit values only apply to this individual component and can deviate from those specified for the entire device. For the entire device in which this individual component is used, refer to the data given specifically for the entire device.

Characteristics	Protective cap
Manufacturer Type	idec HE9Z-D5N1
Material Color	NBR/PVC Polyblend Gray
Characteristics	**Hot-plug button switching element**
Manufacturer Type	RAFI X22FS
Operating voltage AC/DC	Max. 250 V
Operating current AC DC	 3 A/120 V; 1.5 A/240 V 550 mA/120V; 270 mA/240 V
Contact system	Self-cleaning bridge contact
Impact resistance	At least 100 N
Operating force	Approx. 5 N per contact element
Lifespan 1 A / 250 V 2 A / 250 V 4 A / 250 V	 1 million, operations 100000 actuations 30000 actuations
Ambient temperature Operation Storage Transport	 -25 to +70°C -40 to +80°C -40 to +80°C
Vibration Operation	 5 g, 0 to 500 Hz
Shock Operation	 15 g at 11 ms amplitude, half-sinusoidal
Standards N/C contact Weathering resistance Alternating climate stability Salt mist Protection type Approbations in accordance to IEC	 Positive opening contact according to IEC 947-5-1 IEC 600 68-2-3 and 2-30 IEC 600 68-2-14 and 2-33 IEC 600 68-2-11 IP65 60947-5-1/-5, 60204, 60073

Table 61: Technical data - Hot plug button

Figure 1: Connection boxes ... 19
Figure 2: Connection box 4MPCBX.0000-00 ... 21
Figure 3: Connection box - 4MPCBX.0000-00 ... 23
Figure 4: Connection box 4MPCBX.0001-00 ... 25
Figure 5: Dimensions - 4MPCBX.0001-00 ... 26
Figure 6: Mobile Panel box cable 5CAMPB.0100-10 ... 27
Figure 7: Cable layout for box cable 5CAMPB.0100-10 ... 29
Figure 8: 4MPCBX.0000-00 - Drilling template ... 31
Figure 9: Mounting - maximum segment length ... 32
Figure 10: 4MPCBX.0001-00 - Drilling template ... 32
Figure 11: Remove screws ... 33
Figure 12: Disconnecting the plug ... 34
Figure 13: Exchanging the box cable ... 34
Figure 14: Connectors ... 35
Figure 15: Connecting / disconnecting a Mobile Panel ... 38
Figure 16: Alternative connections ... 39
Figure 17: E-stop wiring diagram - delivery status ... 42
Figure 18: E-stop wiring diagram - optional E-stop button ... 42
Figure 19: Connection example for MP100/200 E-stop up to Category 3, PL d according to EN ISO 13849-1:2006 (Category 3 according to EN 954-1:1996) ... 43
Figure 20: Connection example for MP100/200 enable switch up to Category 3, PL d according to EN ISO 13849-1:2006 (Category 3 according to EN 954-1:1996) ... 44
Figure 21: Connection example for MP40/50 stop button up to Category 3, PL d according to EN ISO 13849-1:2006 (Category 3 according to EN 954-1:1996) ... 45
Figure 22: Connection example for MP40/50 enable switch up to Category 3, PL d according to EN ISO 13849-1:2006 (Category 3 according to EN 954-1:1996) ... 46
Figure 23: Relay monitoring ... 47
Figure 24: Monitoring contacts ... 47
Figure 25: Additional connection possibilities ... 48
Figure 26: Risk diagram to determine the PL_r for every safety function ... 81
Figure 27: Risk graph according to EN 954-1:1996, Appendix B ... 83
Figure 28: Cable gland / screw plug ... 85
Figure 29: E-stop entry device ... 87
Figure 30: Hot plug button ... 89

Table 1: Manual history ... 11
Table 2: Organization of safety notices ... 16
Table 3: Model numbers ... 17
Table 4: Technical data - 4MPCBX.0000-00 ... 21
Table 5: Safety characteristics - 4MPCBX.0000-00 ... 23
Table 6: Contents of delivery - 4MPCBX.0000-00 ... 24
Table 7: Technical data 4MPCBX.0000-01 ... 25
Table 8: Technical data - Box cable 5CAMPB.0100-10 ... 28
Table 9: Pin assignments for box cable 5CAMPB.0100-10 ... 29
Table 10: Comparison of supported interfaces ... 40
Table 11: Switching states of the E-stop circuit ... 41
Table 12: Current load for additional connection possibilities ... 48
Table 13: Overview of standards ... 55
Table 14: Overview of limits and testing guidelines for emissions ... 57
Table 15: Test requirements - Network-related emissions for residential areas ... 58
Table 16: Test requirements - Network-related emissions for industrial areas ... 59
Table 17: Test requirements - Electromagnetic emissions for residential areas ... 60
Table 18: Test requirements - Electromagnetic emissions for industrial areas ... 61
Table 19: Overview of limits and testing guidelines for immunity ... 61
Table 20: Test requirements - Electrostatic discharge (ESD) ... 63
Table 21: Test requirements - High-frequency electromagnetic fields (HF field) ... 64
Table 22: Test requirements - High-speed transient electrical disturbances (burst) ... 65
Table 23: Test requirements - Surge voltages ... 66
Table 24: Test requirements - Conducted disturbances ... 67
Table 25: Test requirements - Magnetic fields with electrical frequencies ... 68
Table 26: Test requirements - Voltage dips, fluctuations, and short-term interruptions ... 69
Table 27: Test requirements - Damped vibration ... 69
Table 28: Overview of limits and testing guidelines for vibration ... 70
Table 29: Test requirements - Vibration during operation ... 70
Table 30: Test requirements - Vibration during transport ... 70
Table 31: Test requirements - Shock during operation ... 71
Table 32: Test requirements - Shock during transport ... 71
Table 33: Test requirements - Toppling ... 71
Table 34: Test requirements - Toppling ... 71
Table 35: Overview of limits and testing guidelines for temperature and humidity ... 73
Table 36: Test requirements - Worst case during operation ... 73
Table 37: Test requirements - Dry heat ... 73
Table 38: Test requirements - Dry cold ... 73
Table 39: Test requirements - Large temperature fluctuations ... 74
Table 40: Test requirements - Temperature fluctuations in operation ... 74
Table 41: Test requirements - Humid heat, cyclic ... 74
Table 42: Test requirements - Humid heat, constant (storage) ... 74
Table 43: Safety ... 75
Table 44: Test requirements - Ground resistance ... 75
Table 45: Test requirements - Insulation resistance ... 75
Table 46: Test requirements - High voltage ... 76
Table 47: Test requirements - Residual voltage ... 76

Table 48: Test requirements - Leakage current 76
Table 49: Test requirements - Overload 76
Table 50: Test requirements - Defective component 77
Table 51: Test requirements - Voltage range 77
Table 52: Test requirements - Defective component 77
Table 53: International certifications 78
Table 54: Overview of stop function categories 79
Table 55: Safety category overview 80
Table 56: Legend for risk graph 81
Table 57: Safety category overview 82
Table 58: Parameters S, F and P lead you to the safety category to be used 83
Table 59: Order data for cable gland / screw plug 86
Table 60: Technical data - E-stop switching element and E-stop button 88
Table 61: Technical data - Hot plug button 90

0

0AC808.9 27

4

4MPCBX.0000-00 ..... 17, 21
4MPCBX.0001-00 ..... 17, 25

5

5CAMPB.0100-10 ..... 17, 27

A

Accessories 49, 85
Additional connection possibilities 48
Alternative connections 39
Ambient temperature 22
Appendix A 87

B

Box cable 27, 33

C

Cable gland / screw plug 85
Cable specifications 29
Certifications 78
Commissioning 31
Connecting / disconnecting 38
Connecting / exchanging the box cable 33
Connection box 21
Connection examples
  Enable switch 44, 46
  E-stop 43
  Stop button 45
Connection plugs 22
Connection possibilities 48
Connectivity 20, 40
Connectors 35
Contents of delivery 24
Cover gasket 35
Current load 48
  Enable switch 48
  E-stop contacts 48
  Key switch 48
  Monitoring contacts 48
  Power supply 48
  Push buttons 48

D

Delivery status 42
Dimensions 23

E

EN ISO 13849-1
  2006 80
Enable switch 48
ESD 12
  Electrical components with housing 12
  Electrical components without housing ..12
  Individual components 13
  Packaging 12
  Proper handling 12
E-stop 21
  Delivery status 42
E-stop button 87
E-stop contacts 48
E-stop switching element 88
E-stop wiring diagram 41
Exchanging the box cable 33

F

Fastening the connection box 31
Features 20
Flex radius 28

G

General information 11, 19

H

Hot plug button 21
Hot-plug button 38, 89
Hot-plug button switching element 90

K

Key switch 48

L

Loop resistance 41

M

Manual history 11

Model numbers 17
Monitoring contacts 47, 48
Mounting position 32
MP100/200 connection examples 43
MP40/50 connection examples 45

O

Optional E-stop button 42

P

Pin assignments 27
Power supply 48
Protective cap 21
Push buttons 48
Push-pull locking 20

R

Relative humidity 22
Relay monitoring 47
Relay states 35, 47
Risk evaluation 80, 82

S

Safety notices 12
  Dust, humidity, aggressive gases 14
  Installation 14
  Intended use 12
  Operation 14
  Organization 16
  Policy and procedures 13
  Programs 15
  Protection against electrostatic discharges 12
  Touching electrical parts 14
  Transport and storage 13
  Viruses 15
Screw plug 85
segment 32
Segment length 32
Slot ID 20, 47
ST108 terminal block 42
Standards 55
Standards and certifications 55
Switching states 41

T

Technical data 19, 27
  Box cable 27
  Connection box 21, 25
Terminal block 47