8B0P0110HW00.000-1

1 General information

Passive power supply module 8B0P0110 has an integrated line filter and internal braking resistor. It is also possible to connect an optional external braking resistor.

The module has an external 24 VDC input that can be used to supply an ACOPOSmulti drive system with 24 VDC. This enables compact ACOPOSmulti drive systems to be implemented without auxiliary supply module 8B0C.

Requirements

- Voltage is applied to the external 24 VDC input of the module.
- There is no 8B0C auxiliary supply module in the ACOPOSmulti drive system or the 8B0C auxiliary supply module is not enabled (CR_OK signal is not wired).

Information:

The 24 VDC power consumption of the ACOPOSmulti drive system is not permitted to exceed 90 W in this case.

As soon as auxiliary supply module 8B0C is available in the ACOPOSmulti drive system, the 24 VDC supply is always carried out via this auxiliary supply module 8B0C, even if voltage is present at the external 24 VDC input of passive power supply module 8B0P0110. The CR_OK signal must be wired correctly within the ACOPOSmulti drive system for this.

Passive power supply module 8B0P0110 starts up when at least one of the following conditions is met:

- Voltage is applied to the external 24 VDC input of the module.
- Voltage is applied to the mains input of the module.

As soon as the module has started up and the mains voltage is applied to the module, the DC bus capacitors are charged and output CR_OK is set.

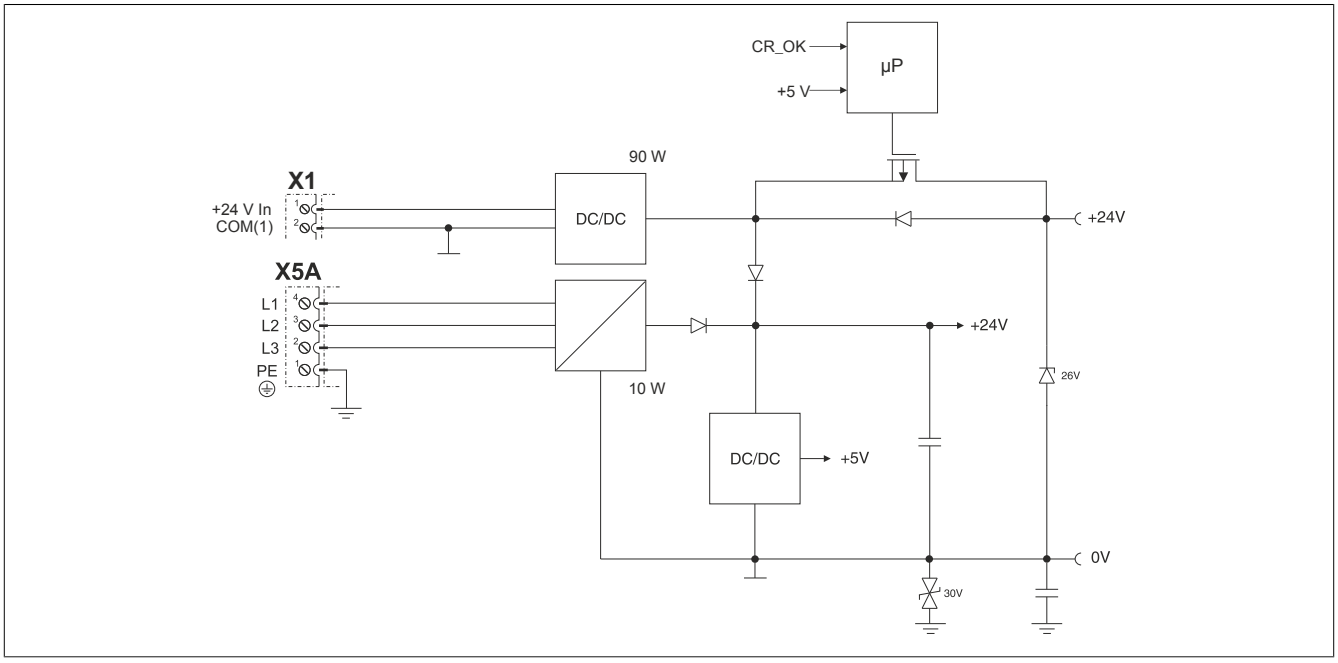

Figure 1: 8B0P0110Hx00.000-1 - 24 VDC power supply diagram

2 Order data

Model number	Short description	Figure
	Wall mounting	
8B0P0110HW00.000-1	ACOPOSmulti power supply module, passive, 11 A, HV, wall mounting, 24 V In 1x, integrated line filter	
	Required accessories	
	Terminal block sets	
8BZ0P011000.000-1A	Screw clamp set for ACOPOSmulti 8B0P0110Hx00.00x-1 modules: 1x 8TB3104.206F-10, 1x 8TB3103.202A-10, 1x 8TB2106.2010-00	
	Optional accessories	
	Braking resistors	
8B0W0045H000.000-1	Braking resistor, 450 W, 50 R, IP20, terminals	
8B0W0045H000.001-1	Braking resistor, 450 W, 50 R, IP65, terminals	
8B0W0079H000.000-1	Braking resistor, 790 W, 33 R, IP20, terminals	
8B0W0079H000.001-1	Braking resistor, 790 W, 33 R, IP65, terminals	
	Fan modules	
8BXF001.0000-00	ACOPOSmulti fan module, replacement fan for ACOPOSmulti modules (8BxP/8B0C/8BVI/8BVE/8B0K)	
	Fuse sets	
8BXS006.0000-00	ACOPOSmulti fuse set: 1x fuse 10x38 mm, 15 A, fast-acting	
	POWERLINK/Ethernet cables	
X20CA0E61.00020	POWERLINK/Ethernet connection cable, RJ45 to RJ45, 0.2 m	
X20CA0E61.00025	POWERLINK/Ethernet connection cable, RJ45 to RJ45, 0.25 m	
X20CA0E61.00030	POWERLINK/Ethernet connection cable, RJ45 to RJ45, 0.3 m	
X20CA0E61.00035	POWERLINK/Ethernet connection cable, RJ45 to RJ45, 0.35 m	
X20CA0E61.00050	POWERLINK/Ethernet connection cable, RJ45 to RJ45, 0.5 m	
X20CA0E61.00100	POWERLINK/Ethernet connection cable, RJ45 to RJ45, 1 m	
	Shield component sets	
8SCS000.0000-00	ACOPOSmulti shield component set: 1 shield plate 1x type 0, 1 hose clamp, B 9 mm, D 12-22 mm	
8SCS002.0000-00	ACOPOSmulti shield component set: 1x clamping plate; 2x clamps D 4-13.5 mm; 4x screws	
8SCS009.0000-00	ACOPOSmulti shield component set: 1x ACOPOSmulti holding plate SK8-14, 1x shield connection clamp SK14	
8SCS010.0000-00	ACOPOSmulti shield component set: 1x ACOPOSmulti holding plate SK14-20, 1x shield connection clamp SK20	
	Terminal blocks	
8TB2106.2010-00	6-pin screw clamp, single row, spacing: 5.08 mm, label 1: numbered serially	
8TB2106.2210-00	Push-in terminal block 6-pin, 1-row, spacing: 5.08 mm, label 1: numbered consecutively	
8TB3103.202A-10	Screw clamp terminal block 3-pin, single-row, pitch: 7.62 mm, labeling 2: PE RB- RB+, coding A: 000	
8TB3104.206F-10	Screw clamp 4-pin, single-row, spacing: 7.62 mm, Label 6: PE L3 L2 L1, Keying: 0101	

Table 1: 8B0P0110HW00.000-1 - Order data

3 Technical data

Model number	8B0P0110HW00.000-1
General information	
B&R ID code	0xDDAD
Cooling and mounting method	Wall mounting
Certifications	
CE	Yes
EAC	Yes
UL	cULus E225616 Power conversion equipment
Mains connection	
Network configurations	TT, TN-S, TN-C-S [1]
Mains input voltage	3x 208 to 3x 480 VAC ±10%
Frequency	50 / 60 Hz ±4%
Installed load	Max. 7.3 kVA
Power dissipation with continuous power	[2.8 * P² + 0.5 * P + 10] W [2]
Inrush current at 400 VAC	2 A
Switch-on interval	>120 s
Max. DC bus capacitance depending on mains voltage	
230 VAC	9 mF
400 VAC	3 mF
480 VAC	2 mF
Integrated line filter per EN 61800-3, category C3 [3]	Yes
Integrated regeneration choke	No
Capable of power regeneration	No
Power factor correction (PFC)	No
Variant	
L1, L2, L3, PE	Connector
PE	M5 threaded bolt
Shield connection [4]	No
Terminal connection cross section	
Flexible and fine-stranded wires	
With wire end sleeves	0.5 to 6 mm²
Approbation data	
UL/C-UL-US	20 to 6 AWG
CSA	20 to 6 AWG
Terminal cable cross section dimension of shield connection	23 to 35 mm
DC bus connection	
Voltage	
Nominal	294 to 679 VDC
Continuous power [5]	4 kW
Reduction of continuous power depending on mains input voltage	
Mains input voltage <3x 400 VAC	10 W/V * (400 V - Mains input voltage)
Reduction of continuous power depending on installation elevation	
Starting at 500 m above sea level	0.4 kW per 1000 m
Reduction of continuous power depending on cooling method	No reduction
Peak power output (supply)	12 kW
Power dissipation with continuous power	In preparation
DC bus capacitance	330 µF
Protective measures	
Overload protection	Yes
Short circuit and ground fault protection	No
Variant	ACOPOSmulti backplane
24 VDC power supply	
Input voltage	25 VDC ±1.6%
Input capacitance	23.5 µF
Max. power consumption	12 W
Variant	ACOPOSmulti backplane
24 VDC In	
Input voltage	
Minimum	18 VDC
Nominal	24 VDC
Maximum	30 VDC
24 VDC internal system power supply	25 VDC ±1.6% (regulated)
Switch-on threshold	16 V
Max. continuous current	4.0 A
Status indicators	24 V LED
Undervoltage detection	Yes

Table 2: 8B0P0110HW00.000-1 - Technical data

Model number	8B0P0110HW00.000-1
Overvoltage detection	Yes
Protective measures	
Open circuit protection	Yes
Overload protection	Yes
Short-circuit proof	Yes
Overtemperature protection	Yes
Variant	
24 VDC In, COM	Connector
Terminal connection cross section of input "24 VDC In"	
Flexible and fine-stranded wires	
With wire end sleeves	0.2 to 2.5 mm²
Approbation data	
UL/C-UL-US	30 to 12 AWG
CSA	22 to 12 AWG
Braking resistor [6]	
Peak power int./ext.	2 kW / 24 kW (max. 1 s)
Continuous power int./ext.	150 W / 8 kW [7]
Min. braking resistance	25 Ω
Rated current of built-in fuse [8]	15 A (fast-acting)
Variant	
RB+, RB-, PE	Connector
Shield connection	Yes
Terminal connection cross section	
Flexible and fine-stranded wires	
With wire end sleeves	0.25 to 6 mm²
Approbation data	
UL/C-UL-US	24 to 8 AWG
CSA	24 to 8 AWG
Terminal cable cross section dimension of shield connection	23 to 35 mm
Protective measures	
Overload protection	Yes
Short circuit and ground fault protection	Yes (with RB+ by externally replaceable melting fuse)
Electrical properties	
Discharge capacitance	0.4 µF
Operating conditions	
Permissible mounting orientations	
Hanging vertically	Yes
Lying horizontally	Yes
Standing horizontally	No
Installation elevation above sea level	
Nominal	0 to 500 m
Maximum [9]	4000 m
Pollution degree per EN 61800-5-1	2 (non-conductive pollution)
Overvoltage category per EN 61800-5-1	III
Degree of protection per EN 60529	IP20
Ambient conditions	
Temperature	
Operation	
Nominal	5 to 40°C
Maximum [10]	55°C
Storage	-25 to 55°C
Transport	-25 to 70°C
Relative humidity	
Operation	5 to 85%
Storage	5 to 95%
Transport	Max. 95% at 40°C
Mechanical properties	
Dimensions [11]	
Width	53.5 mm
Height	317 mm
Depth	
Wall mounting	263 mm
Weight	3.5 kg
Module width	1

Table 2: 8B0P0110HW00.000-1 - Technical data

1) TT and TN power systems are commonly referred to as "Delta/Wye with grounded wye neutral" in the USA.
2) P ... Continuous power [kW]. Applies to drive systems where the 8BVI inverter modules are operated at the nominal switching frequency (5 kHz).
3) Limit values from EN 61800-3 C3 (second environment). The total length of all motor cables on each drive system (and for each 8B0P0110 power supply module) is not permitted to exceed 75 m. In order to conform to EMC limit values, the 8BVI inverter modules in the drive system are permitted to be operated at a maximum switching frequency of 10 kHz (at a switching frequency of 20 kHz, the total length of all motor cables on each drive system is reduced to a maximum length of 45 m). At a maximum switching frequency of 10 kHz, it is possible to conform to the limits specified in EN 61800-3 C2 when using an external line filter. The maximum permissible motor cable length per motor connection must also be taken into account (see 8BVI inverter modules).

4) Cables do not have to be shielded up to a total wiring length of 3 m between the line filter and power supply module. Consult B&R when using cable lengths over 3 m.
5) Valid under the following conditions: 3x 400 VAC mains input voltage, 5 kHz switching frequency, 40°C ambient temperature, installation elevation < 500 m above sea level, no derating due to cooling type.
6) The power calculations are based on a DC bus voltage of 700 VDC.
Danger!
A component malfunction in the 8B0P passive power supply module can lead to continuous power output to the external braking resistor, causing it to overheat. This must be taken into account when selecting (e.g. intrinsic safety), organizing and operating the external braking resistor. Thermal monitoring and external cutoff devices should be implemented if necessary.
If B&R 8B0W braking resistors are used and the 8B0P power supply module is operated with a mains voltage of 3x 360 to 3x 480 VAC ±10%, there is no need for thermal monitoring since B&R 8B0W braking resistors are intrinsically safe under these conditions.
7) Continuous power refers to the maximum braking power the ACOPOSmulti power supply module can exchange continuously. Depending on the application, the actual continuous power provided by the external braking resistor is limited by the rated current of fuse I_B (integrated in the ACOPOSmulti device) and the value of the external braking resistance R_{BR}.
8) A Littelfuse KLK D 015 fuse must be used.
9) Continuous operation at an installation elevation of 500 m to 4,000 m above sea level is possible taking the specified reduction of continuous current into account. Requirements that go beyond this must be arranged with B&R.
10) Continuous operation at an ambient temperature of 40°C to max. 55°C is possible taking the specified reduction of continuous torque into account, but this results in premature aging of components.
11) These dimensions refer to the actual device dimensions including the respective mounting plate. Make sure to leave additional space above and below the devices for mounting, connections and air circulation.

4 Status indicators

Status indicators are located on the black cover of each module.

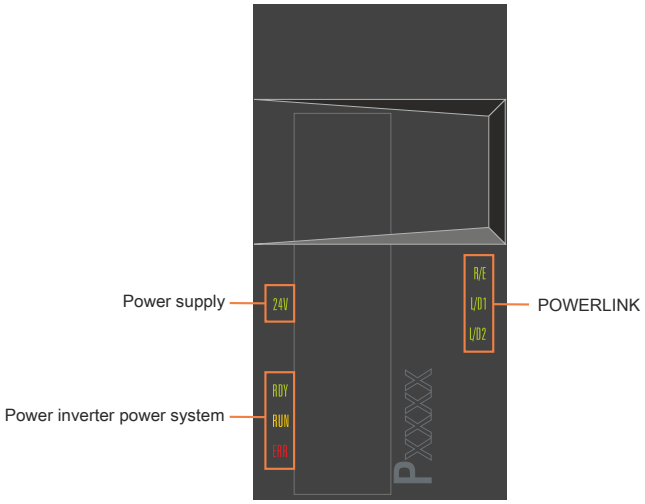

Figure 2: 8B0P power supply modules - Status indicator groups

4.1 LED status indicators

Status indicator group	Label	Color	Function	Description
POWERLINK	R/E	Green/Red	Ready/Error	see "POWERLINK - LED status indicators" on page 8
	L/D1	Green	Link/Data activity on port 1	
	L/D2	Green	Link/Data activity on port 2	
Power inverter power system	RDY	Green	Ready	see "RDY, RUN, ERR (8BVI, 8BVP, 8B0P) - LED status indicators" on page 7
	RUN	Orange	Run	
	ERR	Red	Error	
Power supply	24 V	Green	24 V OK	The 24 V internal system power supply is higher than the minimum permissible value and/or the 24 V internal module voltage supply is within the tolerance range [1)]

Table 3: 8B0P power supply modules - LED status indicators

1) 8B0P power supply modules have an internal power supply that generates 24 VDC directly from the mains input voltage for module-internal purposes. If the 24 VDC generated in the module is properly applied, LED "24 V" is lit.
It is therefore possible that LED "24 V" is lit although the 24 VDC internal system voltage generated by the 24 VDC 8B0C auxiliary supply module is not present via the mounting plate on power supply module 8BxP. This is the case, for example, if the 24 VDC 8B0C auxiliary supply module of the ACOPOSmulti drive system is defective or has no electrical contact to the mounting plate.

4.2 LED status ERROR

The following intervals are used for the LED status indicators:

Block size: 500 ms
Repeats after: 3,000 ms

Status	LED	Display
Charging resistor overtemperature	RDY	
	RUN	
	ERR	

Module not configured in Automation Studio

The following intervals are used for the LED status indicators:

Block size: 50 ms
Repeats after: 3,000 ms

Status	LED	Display
Module not configured in Automation Studio	RDY	
	RUN	
	ERR	

4.3 RDY, RUN, ERR (8BVI, 8BVP, 8B0P) - LED status indicators

Label	Color	Function	Description	
RDY	Green	Ready	Solid green	The module is operational and the power stage can be enabled (operating system present and booted, no permanent or temporary errors).
			Blinking green [1]	The module is not ready for operation. **Examples:** • No signal on one or both enable inputs • DC bus voltage outside the tolerance range • Overtemperature on the motor (temperature sensor) • Motor feedback not connected or defective • Motor temperature sensor not connected or defective • Overtemperature on the module (IGBT junction, heat sink, etc.) • Disturbance on network
RUN	Orange	Run	Solid orange	The module's power stage is enabled.
ERR	Red	Error	Solid red [1]	There is a permanent error on the module. **Examples:** • Permanent overcurrent • Invalid data in EPROM
			Blinking red	• LED status "Status changes when starting up the operating system loader" on page 8

Table 4: RDY, RUN, ERR (8BVI, 8BVP, 8B0P) - LED status indicators

1) Firmware V2.130 and later.

Information:

The ACOPOSmulti drive system has no way of detecting whether the fans in the fan modules of the mounting plate or the module-internal fans are actually rotating.

4.4 POWERLINK - LED status indicators

Label	Color	Function	Description	
R/E	Green/Red	Ready/Error	LED off	The module is not supplied with power or network interface initialization has failed.
			Solid red	The POWERLINK node number of the module is 0.
			Blinking red/green	The client is in an error state (drops out of cyclic operation).
			Blinking green (1x)	The client detects a valid POWERLINK frame on the network.
			Blinking green (2x)	Cyclic operation on the network is taking place, but the client itself is not yet a participant.
			Blinking green (3x)	Cyclic operation of the client is in preparation.
			Solid green	The client is participating in cyclic operation.
			Flickering green	The client is not participating in cyclic operation and also does not detect any other stations on the network participating in cyclic operation.
L/D1	Green	Link/Data activity Port 1	Solid green	A physical connection has been established to another station on the network.
			Blinking green	Activity on port 1
L/D2	Green	Link/Data activity Port 2	Solid green	A physical connection has been established to another station on the network.
			Blinking green	Activity on port 2

Table 5: POWERLINK - LED status indicators

4.5 Backup battery - LED status indicators

Label	Color	Function	Description	
BAT	Green/Red	Ready/Error	LED off	**Possible causes:** • The voltage of the installed backup battery is within the tolerance range, but an EnDat encoder with backup battery is not connected. • An EnDat encoder with backup battery is connected and registering "Battery OK", but the module's firmware version does not support EnDat encoders with battery backup.
			Solid green	An EnDat encoder with battery backup is connected and registering "Battery OK" (voltage of the installed backup battery is within the tolerance range).
			Solid red	An EnDat encoder with battery backup is connected and registering "Battery not OK". **Possible causes:** • Voltage of the installed backup battery outside of tolerance range • No backup battery installed in module

Table 6: Backup battery - LED status indicators

4.6 Status changes when starting up the operating system loader

The following intervals are used for the LED status indicators:

Width of box: 50 ms
Repeats after: 3,000 ms

Status	LED	Display
1. Boot procedure for base hardware active	RDY	
	RUN	
	ERR	
2. Network configuration active	RDY	
	RUN	
	ERR	
3. Waiting for network telegram	RDY	
	RUN	
	ERR	
4. Network communication active	RDY	
	RUN	
	ERR	
5. ACOPOS operating system being transferred/burned [1]	RDY	
	RUN	
	ERR	

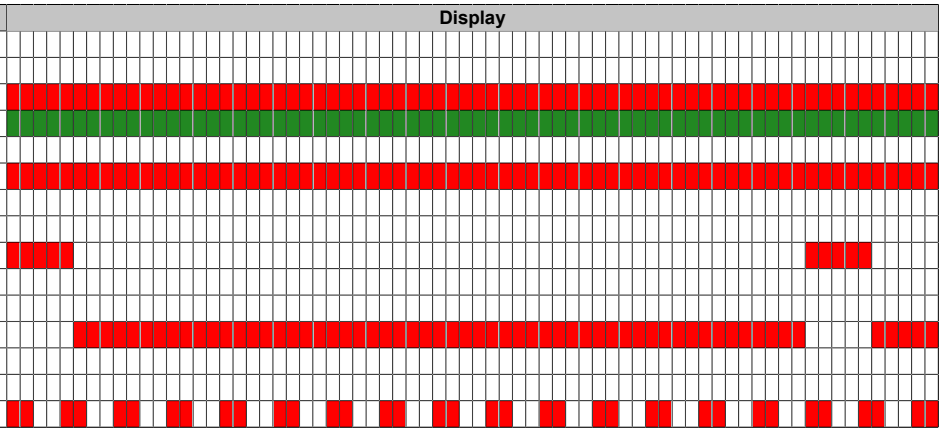

Table 7: Status changes when starting up the operating system loader

1) Firmware V2.140 and later.

5 Wiring

5.1 Pinout overview

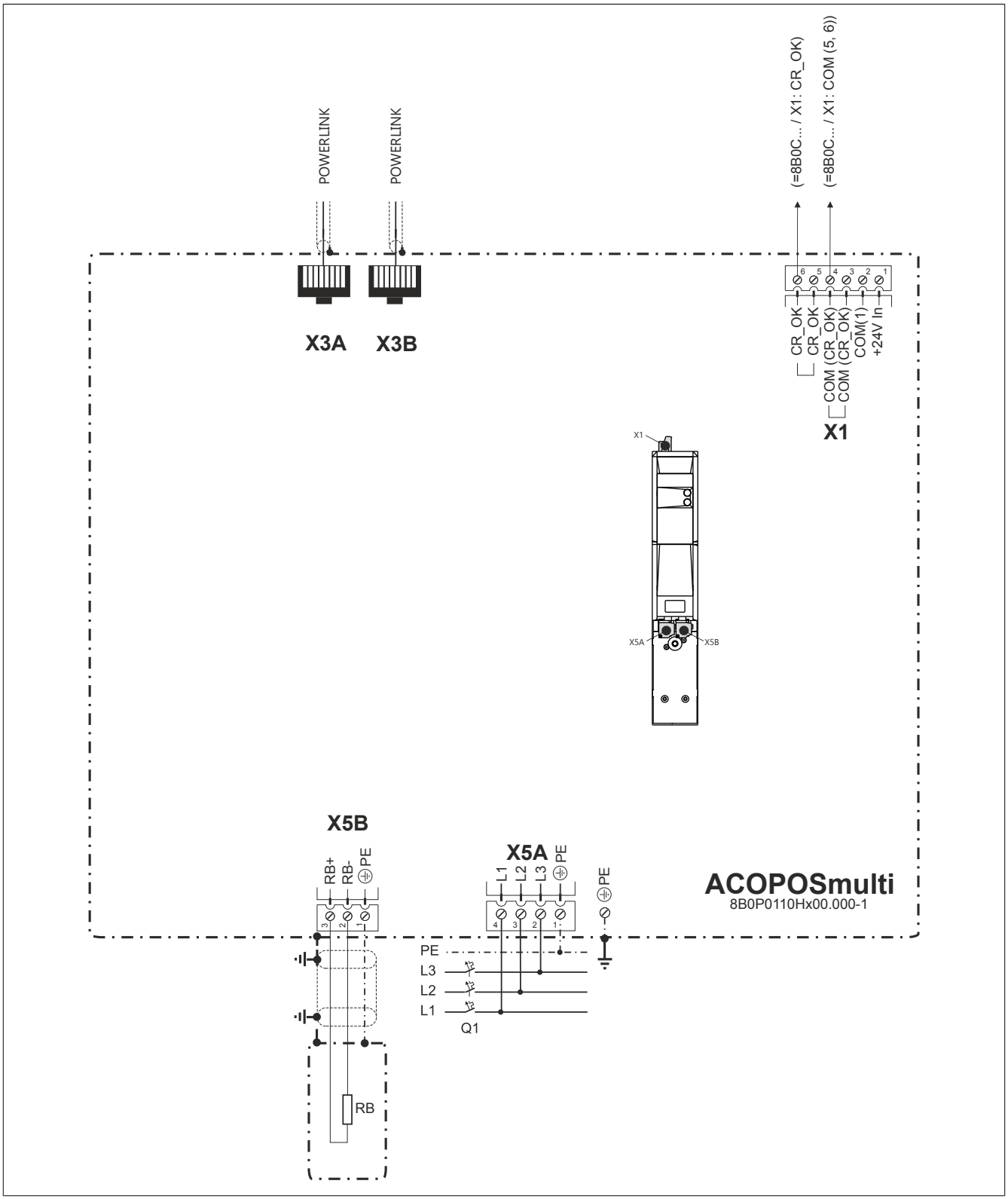

Figure 3: 8B0P0110Hx00.000-1 - Pinout overview

5.2 Connector X1 - Pinout

X1	Pin	Description	Function
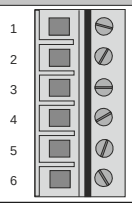	1	+24 V In	+24 V feed
	2	COM(1)	+24 V supply, 0 V
	3	COM CR_OK	Activation/Enable 8B0C/8B0K3630 0 V
	4	COM CR_OK	Activation/Enable 8B0C/8B0K3630 0 V
	5	CR_OK [1)]	Activation/Enable 8B0C/8B0K3630
	6	CR_OK [1)]	Activation/Enable 8B0C/8B0K3630

Table 8: Connector X1 - Pinout

1) Output CR_OK (activation/approval 8B0C/8B0K3630) is set for 1 s as soon as the charging relay is closed and DC bus voltage UDC > 270 VDC.

Auxiliary supply module 8B0C available in the ACOPOSmulti drive system:

- Auxiliary supply module 8B0C is enabled and supplies the ACOPOSmulti drive system with 24 VDC.
- Output CR_OK remains set.
- The 24 VDC power supply of the ACOPOSmulti drive system is not provided via X1/+24 V In and X1/COM(1) connections of passive power supply module 8B0P0110.

No auxiliary supply module 8B0C available in the ACOPOSmulti drive system:

- Output CR_OK is reset.
- The 24 VDC power supply of the ACOPOSmulti drive system is provided via X1/+24 V In and X1/COM(1) connections of passive power supply module 8B0P0110. In this case, using 8B0K3630 capacitor modules in the ACOPOSmulti drive system is not possible.

Danger!

The connections for the 24 V supply are isolated circuits. These connections are therefore only permitted to be connected to devices or components that have sufficient isolation per IEC 60364-4-41 or EN 61800-5-1.

5.3 Connectors X3A, X3B - Pinout

X3A, X3B	Pin	Description	Function
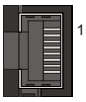	1	RXD	Receive signal
	2	RXD\	Receive signal inverted
	3	TXD	Transmit signal
	4	Shield	Shield
	5	Shield	Shield
	6	TXD\	Transmit signal inverted
	7	Shield	Shield
	8	Shield	Shield

Table 9: X3A, X3B connectors - Pinout

5.4 Connector X5A - Pinout

X5A	Description	Function
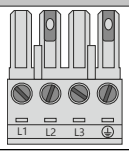	PE	Power system: Protective ground conductor
	L3	Power system: Mains connection L3
	L2	Power system: Mains connection L2
	L1	Power system: Mains connection L1

Table 10: Connector X5A - Pinout

5.5 Connector X5B - Pinout

X5B	Description	Function
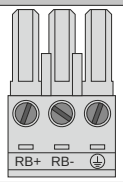	PE	Protective ground conductor
	RB-	Braking resistor -
	RB+	Braking resistor +

Table 11: X5B - Pinout

Danger!

Before switching on the module, it is important to make sure that the housing is properly connected to ground (PE rail). Ground connections must also be established if the module is connected for test purposes or only being operated for a short period of time!

5.6 Additional protective ground connection (PE)

The protective ground conductor is secured to the M5 threaded bolt provided for this purpose using a cable lug.

Figure	Pin	Description	Function
	---	PE	Protective ground conductor
Terminal cross section	**[mm²]**		**AWG**
Cable lug for M5 threaded bolt	0.25 - 16		23 - 5

Table 12: Additional protective ground connection (PE)

5.7 Input/Output circuit diagram

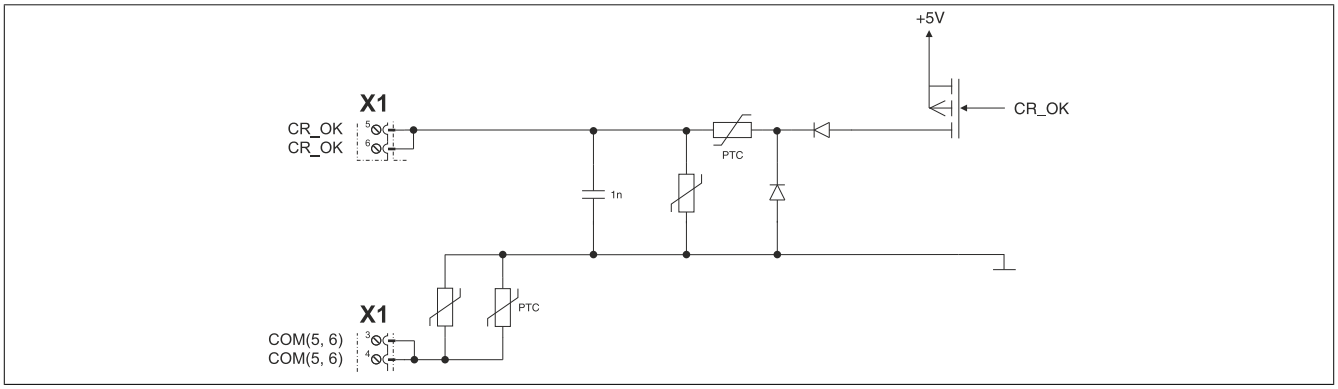

Figure 4: 8B0C - Enable

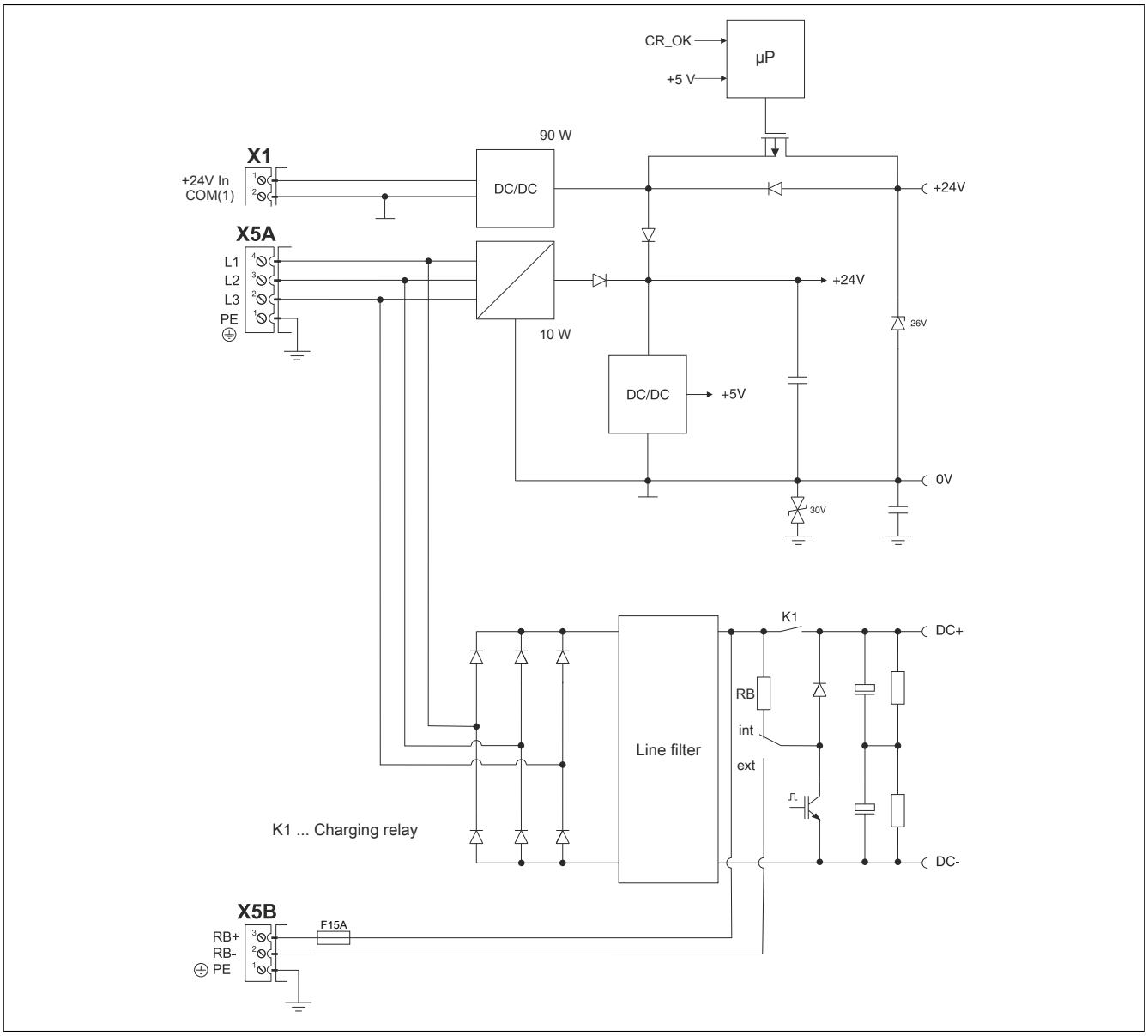

Figure 5: Power unit and external 24 VDC input

6 POWERLINK node number setting

The POWERLINK node number can be set using the two hexadecimal coded rotary switches located behind the module's black cover.

Figure		Coded rotary switches	POWERLINK node number
 Cover closed	 Cover open	1	16s position (high)
		2	1s position (low)
		A change to the POWERLINK node number only takes effect the next time the ACOPOSmulti drive system is switched on. **Information:** **In principle, node numbers between $01 and $FD are permitted.** **However, node numbers between $F0 and $FD are intended for future system expansions. To ensure compatibility, these node numbers should be avoided.** **Node numbers $00, $FE and $FF are reserved and are therefore not permitted to be set.**	

Table 13: Setting the POWERLINK node number