Automation PC 910

User's manual

Version: **1.36 (August 2016)**
Model no.: **MAAPC900-ENG**

The values and specifications listed in this manual are current as of its publication. We reserve the right to change the contents of this manual without notice. Bernecker + Rainer Industrie-Elektronik Ges.m.b.H. is not liable for technical/editorial errors and/or any incomplete information in this manual. In addition, Bernecker + Rainer Industrie-Elektronik Ges.m.b.H. shall not be liable for any incidental or consequential damages in connection with or arising from the furnishing, performance or use of the product(s) in this documentation. Software names, hardware names and trademarks are registered by their respective companies.

Chapter 1 • General information

1 Manual history

Version	Date	Change
0.10 Preliminary	2012-06-12	• First version
1.00	2012-11-26	• Updated chapter 4 "Software" on page 213. • Updated chapter 7 "Maintenance and servicing" on page 376. • Updated "Appendix A" on page 404. • Modified "Organization of safety notices" on page 17. Updated descriptions for cautions and warnings. • Revised terminology in German edition. • Updated the following sections in chapter "Technical data": "Temperature specifications" on page 26, "Block diagrams" on page 41, "Humidity specifications" on page 32. • Updated the following sections in chapter "Installation": "Mounting orientations" on page 193, "Spacing for air circulation" on page 195, "Grounding concept" on page 197. • Updated CPU boards 5PC900.TS77-00, 5PC900.TS77-01, 5PC900.TS77-05, 5PC900.TS77-06, 5PC900.TS77-07 and 5PC900.TS77-08 in sections "QM77 CPU boards " on page 84 and "HM76 CPU boards " on page 86. • Updated the following drives: "5AC901.CSSD-00" on page 103, "5AC901.CSSD-01" on page 105, "5AC901.CSSD-02" on page 107, "5AC901.CCFA-00" on page 135. • Updated the following interface options: "5AC901.ICAN-00" on page 149, "5AC901.IHDA-00" on page 152, "5AC901.ISRM-00" on page 154. • Updated section "Monitor/Panel options" on page 166. • Updated heat sink 5AC901.HS01-00, see "5AC901.HS0x-00" on page 92. • Modified section "System components / Configuration" on page 23. • Updated bus units 5AC901.BX01-01 and 5AC901.BX02-01, see "Bus units" on page 89. • Updated "CFast cards" on page 328. • Updated USB media drive, see "5MD900.USB2-02" on page 342.
1.05	2013-03-19	• Updated the following sections in chapter 2 "Technical data": "Monitor/Panel option" on page 62, "Slide-in slot 1" on page 66, "Uninterruptible power supply (UPS)" on page 174. • Updated the following drives: "5AC901.CHDD-01" on page 98, "5MMHDD.0500-00" on page 100, "5AC901.CHDD-99" on page 136. • Updated the service life of the battery, see "Battery" on page 65. • Updated sections "BIOS options" on page 213 and "Upgrade information" on page 282 in chapter 4 "Software". • Updated sections "Replacing the battery" on page 376, "Installing PCI/PCIe cards" on page 391 and "Connecting an external device to the mainboard" on page 399 in 7 "Maintenance and servicing". • Modified tables "Umgebungstemperatur mit Lüfter" on page and "Umgebungstemperatur ohne Lüfter" on page . • Updated "Internal supply cable" on page 372.
1.10	2013-06-12	• Updated system unit "5PC910.SX05-00" on page 79. • Updated fan kit "5AC901.FA05-00" on page 95. • Updated front covers 5AC901.FF01-01, 5AC901.FF02-01, 5AC901.FF05-00 and 5AC901.FF05-01 on page 190. • Updated slide-in compact drive "5AC901.CSSD-03" on page 109. • Updated replacement SSDs "5MMSSD.0060-00" on page 120, "5MMSSD.0060-01" on page 122 and "5MMSSD.0180-00" on page 128. • Updated slide-in drives "5AC901.SDVW-00" on page 137 and "5AC901.SSCA-00" on page 140. • Updated bus units 5AC901.BX05-00, 5AC901.BX05-01 and 5AC901.BX05-02 on page 89. • Updated PCI RAID system "5ACPCI.RAIC-06" on page 141. • Updated the replacement fan kits on page 373. • Updated section "Slide-in slot 2" on page 67. • Updated chapter 5 "Standards and certifications" on page 320. • Updated section "Configuring a SATA RAID set using the internal RAID controller" on page 207. • Updated sections "Slide-in 1 features" on page 237 and "Slide-in 2 features" on page 239 in BIOS. • Revised section "Installing and connecting the UPS battery unit" on page 394. • Revised section "Power management" on page 33. • Modified Fig. 158 "PCI and PCIe routing with enabled APIC for QM77/HM76 CPU boards" on page 281. • Updated the BIOS version to V1.13, see "BIOS options" on page 213.

Table 1: Manual history

Version	Date	Change
1.05	2013-07-30	• Updated section "Fan control" on page 31. • Updated UPS cable 5CAUPS.0010-01, see "5CAUPS.xxxx-01" on page 188. • Updated B&R USB flash drive 5MMUSB.4096-01, see "USB flash drives" on page 340. • Updated slide-in compact drive "5AC901.CSSD-04" on page 112. • Updated replacement SSD "5MMSSD.0128-01" on page 125. • Updated UPS IF option "5AC901.IUPS-01" on page 178 and UPS battery unit "5AC901.BUPS-01" on page 184. • Updated replacement disk tray "5AC901.FRAM-00" on page 348. • Updated tightening torque of locating screws in section "Cables" on page 349. • Updated bus units 5AC901.BX02-02 and 5AC901.BX05-03 in section "Bus units" on page 89. • Updated sections "B&R Automation Device Interface (ADI) Development Kit" on page 312 and "B&R Automation Device Interface (ADI) .NET SDK" on page 314. • Updated HM76 CPU boards 5PC900.TS77-09 and 5PC900.TS77-10 in section "5PC900.TS77-0x" on page 86.
1.20	2014-04-14	• Revised sections "IF option 1 slot" on page 61 and "IF option 2 slot" on page 61. • Updated following section in "Windows 7": "Installing on the internal RAID controller (QM77)" on page 298. • Updated following section in "Windows XP Professional": "Installing on the internal RAID controller (QM77) or in AHCI mode" on page 303. • Updated information about the discontinuation of support for the operating system "Windows XP Professional" on page 302. • Revised section "Automation Runtime" on page 306. • Updated "GL", "cULus HazLoc Class 1 Division 2" and "GOST-R" certification to the technical data for several individual components. • Updated sections "GOST-R" on page 321 and "DNV GL certification (Det Norske Veritas Germanischer Lloyd)" on page 322 in chapter 5 "Standards and certifications". • Updated the BIOS version to V1.15, see "BIOS options" on page 213. • Updated front covers 5AC901.FF01-02, 5AC901.FF02-02 and 5AC901.FF05-02 on page 190. • Updated monitor/panel option "5AC901.LSD3-00" on page 171. • Updated ready relay IF option "5AC901.IRDY-00" on page 160. • Updated slide-in compact drive "5AC901.CSSD-05" on page 115. • Updated replacement SSD "5MMSSD.0256-00" on page 130. • Corrected technical data for ambient temperature and humidity for the following drives: "5AC901.CSSD-03" on page 109, "5AC901.CSSD-04" on page 112, "5MMSSD.0060-01" on page 122, "5MMSSD.0128-01", "5MMSSD.0256-00" on page 130. • Updated "Line filter" on page 374. • Updated SDL3 cables "5CASD3.xxxx-00" on page 365. • Updated service life diagram for the "5AC901.BUPS-00" and "5AC901.BUPS-01" battery units.
1.21	2014-05-27	• Corrected technical data for bus units with PCI Express slots – PCIe standard and bus speed, see "Technical data" on page 91. • Corrected Fig. 158 "PCI and PCIe routing with enabled APIC for QM77/HM76 CPU boards" on page 281. • Documented new revision of CFast cards, see "CFast cards" on page 328.
1.22	2014-08-25	• Corrected Tab. 9 "1-slot APC variant - Power calculation table" on page 34, Tab. 11 "2-slot APC variant - Power calculation table" on page 36 and Tab. 13 "5-slot APC variant - Power calculation table" on page 38. • Corrected Fig. 5 "Voltage supply for system units" on page 33.
1.25	2015-02-11	• Updated interface option 5AC901.ISIO-00, see "Interface options" on page 144. • Updated "Windows Embedded 8.1 Industry Pro" on page 293. • Updated Fig. X "Revision der Einzelkomponenten mit GL-Zulassung" on page and Fig. X "GL-Zertifikat Nr. 61 601 - 13 HH" on page . • Updated section "Mounting orientation - Floor-mounted" on page 194. • Updated section "Known problems / Issues" on page 212. • Updated the BIOS version to V1.19, see "BIOS options" on page 213. • Updated section "Automation Runtime" on page 306. • Updated 5CFAST.032G-10, 5CFAST.064G-10 and 5CFAST.128G-10 CFast cards, see "CFast cards" on page 328. • Updated section "Fan control" on page 31.

Table 1: Manual history

Version	Date	Change
1.30	2015-09-30	• Updated terminal block 0TB2104.8000 for ready relay, see "0TB2104.8000" on page 326. • Updated SDL cable 5CASDL.0008-00, see "SDL cables" on page 352. • Updated "B&R KCF Editor". • Updated "HMI Service Center" on page 319 (5SWUTI.0001-000). • Documented new revision of bus unit 5AC901.BX02-02, see "Bus units" on page 89. • Updated figure "Grounding concept" on page 197. • Revised section "SDL3 - LED status indicators" on page 173. • Updated section "B&R Automation Device Interface (ADI) - Control Center" on page 310. • Updated "Humidity specifications" on page 32. • Updated MTCX controller, see "Maintenance Controller Extended (MTCX)" on page 404. • Updated section "DNV GL certification (Det Norske Veritas Germanischer Lloyd)" on page 322. • Updated section about Debian 8, see "Debian (GNU/Linux)" on page 308. • Updated POWERLINK IF option "5AC901.IPLK-00" on page 156. • Revised overview of "Windows Embedded 8.1 Industry Pro", "Windows 7" and "Windows Embedded Standard 7".
1.31	2015-11-12	• Updated slide-in compact drive "5AC901.CSSD-06" on page 118. • Updated replacement SSD "5MMSSD.0512-00" on page 133. • Updated Technology Guard (HID) 0TG1000.02, see "Automation Runtime" on page 306. • Updated slide-in compact drive "5AC901.CHDD-99" on page 136.
1.32	2016-01-28	• Updated the BIOS version to V1.23, see "BIOS options" on page 213. • Correct PCI slot assignment n "PCI and PCIe routing with enabled APIC for QM77/HM76 CPU boards" on page 281.
1.35	2016-04-14	• Renamed SO-DIMM 1 and SO-DIMM 2 to CPU board sensor 3 and CPU board sensor 4, see "Temperature sensor locations" on page 30. • Updated "Humidity specifications" on page 32. • Updated drives "5AC901.CHDD-01" on page 98 and "5MMHDD.0500-00" on page 100. • Documented new revisions of drives "5AC901.CSSD-03", "5AC901.CSSD-04", "5AC901.CSSD-05", "5MMSSD.0060-01", "5MMSSD.0128-01" and "5MMSSD.0256-00". • Updated "Windows 10 IoT Enterprise 2015 LTSB" on page 290. • Updated section "General instructions for performing temperature testing" on page 198 in chapter 3 "Installation". • Updated PCI RAID controller "5ACPCI.RAIC-06" on page 141. • Updated SDL3 cable 5CASD3.0030-00, see "SDL3 cables" on page 365. • Updated section "Power supply +24 VDC" on page 53.
1.36	2016-08-02	• Updated "Device interfaces - Overview" on page 51. • Documented new front covers 5AC901.FF01-03, 5AC901.FF02-03 and 5AC901.FF05-03 on page 190. • Updated Ethernet interface option "5AC901.IETH-00" on page 164. • Updated PCIe plug-in card "5ACPCE.ETH1-00". • Updated chapter 5 "Standards and certifications" as well as "EAC" on page 321, "KC" on page 321 and "RCM" on page 322. • Updated section 3.11 "Uninterruptible power supply (UPS)". • Corrected I/O address and IRQ of IF option 1 (COM E) and IF option 2 (COM F) on page 146.

Table 1: Manual history

2 Safety guidelines

2.1 Intended use

Programmable logic controllers (PLCs), operating/monitoring devices (industrial PCs, Power Panels, Mobile Panels, etc.) and B&R uninterruptible power supplies have been designed, developed and manufactured for conventional use in industrial environments. They were not designed, developed and manufactured for any use involving serious risks or hazards that could lead to death, injury, serious physical damage or loss of any kind without the implementation of exceptionally stringent safety precautions. In particular, such risks and hazards include the use of these devices to monitor nuclear reactions in nuclear power plants, their use in flight control or flight safety systems as well as in the control of mass transportation systems, medical life support systems or weapons systems.

2.2 Protection against electrostatic discharge

Electrical components that can be damaged by electrostatic discharge (ESD) must be handled accordingly.

2.2.1 Packaging

- **Electrical components with a housing**
  ...do not require special ESD packaging but must be handled properly (see "Electrical components with a housing").
- **Electrical components without a housing**
  …are protected by ESD-suitable packaging.

2.2.2 Guidelines for proper ESD handling

Electrical components with a housing

- Do not touch the connector contacts on connected cables.
- Do not touch the contact tips on circuit boards.

Electrical components without a housing

The following points apply in addition to the points listed under "Electrical components with a housing":

- Any persons handling electrical components or devices with installed electrical components must be grounded.
- Components are only permitted to be touched on their narrow sides or front plate.
- Components should always be stored in a suitable medium (ESD packaging, conductive foam, etc.). Metallic surfaces are not suitable storage surfaces!
- Components should not be subjected to electrostatic discharge (e.g. through the use of charged plastics).
- Ensure a minimum distance of 10 cm from monitors and TV sets.
- Measuring instruments and equipment must be grounded.
- Probes on potential-free measuring instruments must be discharged on sufficiently grounded surfaces before taking measurements.

Individual components

- ESD protective measures for individual components are thoroughly integrated at B&R (conductive floors, footwear, arm bands, etc.).
- These increased ESD protective measures for individual components are not necessary for customers handling B&R products.

2.3 Policies and procedures

Electronic devices are never completely failsafe. If the programmable control system, operating/monitoring device or uninterruptible power supply fails, the user is responsible for ensuring that other connected devices, e.g. motors, are brought to a secure state.

When using programmable logic controllers or operating/monitoring devices as control systems together with a soft PLC (e.g. B&R Automation Runtime or comparable product) or slot PLC (e.g. B&R LS251 or comparable product), safety precautions relevant to industrial control systems (e.g. the provision of safety devices such as emergency stop circuits, etc.) must be observed in accordance with applicable national and international regulations. The same applies for all other devices connected to the system, such as drives.

All tasks such as the installation, commissioning and servicing of devices are only permitted to be carried out by qualified personnel. Qualified personnel are those familiar with the transport, mounting, installation, commissioning and operation of devices who also have the appropriate qualifications (e.g. IEC 60364). National accident prevention regulations must be observed.
The safety notices, connection descriptions (type plate and documentation) and limit values listed in the technical data are to be read carefully before installation and commissioning and must be observed.

2.4 Transport and storage

During transport and storage, devices must be protected against undue stress (mechanical loads, temperature, moisture, corrosive atmospheres, etc.).

2.5 Installation

- These devices are not ready for use upon delivery and must be installed and wired according to the specifications in this documentation in order for the EMC limit values to apply.
- Installation must be performed according to this documentation using suitable equipment and tools.
- Devices are only permitted to be installed by qualified personnel without voltage applied. Before installation, voltage to the control cabinet must be switched off and prevented from being switched on again.
- General safety guidelines and national accident prevention regulations must be observed.
- Electrical installation must be carried out in accordance with applicable guidelines (e.g. line cross sections, fuses, protective ground connections).

2.6 Operation

2.6.1 Protection against touching electrical parts

To operate programmable logic controllers, operating and monitoring devices, and uninterruptible power supplies, certain components must carry dangerous voltage levels over 42 VDC. Touching one of these parts can result in a life-threatening electric shock. This could lead to death, severe injury or damage to property.

Before turning on the programmable logic controller, operating/monitoring devices or uninterruptible power supply, the housing must be properly grounded (PE rail). Ground connections must be established even when testing or operating operating/monitoring devices or the uninterruptible power supply for a short time!

Before switching on the device, all parts that carry voltage must be securely covered. During operation, all covers must remain closed.

2.6.2 Environmental conditions - Dust, moisture, corrosive gases

The use of operating/monitoring devices (e.g. industrial PCs, Power Panels, Mobile Panels, etc.) and uninterruptible power supplies in very dusty environments should be avoided. Dust collection on the devices can affect functionality and may prevent sufficient cooling, especially in systems with active cooling systems (fans).

The presence of corrosive gases can also lead to malfunctions. When combined with high temperature and humidity, corrosive gases – e.g. with sulfur, nitrogen and chlorine components – can induce chemical reactions that can damage electronic components very quickly. Signs of the presence of corrosive gases are blackened copper surfaces and cable ends on existing equipment.

For operation in dusty or moist conditions, correctly installed (e.g. cutout installations) operating/monitoring devices like the Automation Panel or Power Panel are protected on the front. The back of all devices must be protected from dust and moisture and cleaned at suitable intervals.

2.6.3 Viruses and dangerous programs

This system is subject to potential risk each time data is exchanged or software is installed from a data medium (e.g. diskette, CD-ROM, USB flash drive, etc.), a network connection or the Internet. The user is responsible for assessing these dangers, implementing preventive measures such as virus protection programs, firewalls, etc. and making sure that software is only obtained from trusted sources.

2.7 Environmentally friendly disposal

All B&R programmable controllers, operating/monitoring devices and uninterruptible power supplies are designed to inflict as little harm as possible on the environment.

2.7.1 Separation of materials

It is necessary to separate different materials so the device can undergo an environmentally friendly recycling process.

Component	Disposal
Programmable logic controllers Operating/Monitoring devices Uninterruptible power supply Batteries and rechargeable batteries Cables	Electronics recycling
Cardboard box / Paper packaging	Cardboard box / Paper recycling
Plastic packaging	Plastic recycling

Disposal must comply with applicable legal regulations.

3 Organization of safety notices

Safety notices in this manual are organized as follows:

Safety notice	Description
Danger!	Disregarding these safety guidelines and notices can be life-threatening.
Warning!	Disregarding these safety guidelines and notices can result in severe injury or substantial damage to property.
Caution!	Disregarding these safety guidelines and notices can result in injury or damage to property.
Information:	This information is important for preventing errors.

Table 2: Description of the safety notices used in this documentation

4 Guidelines

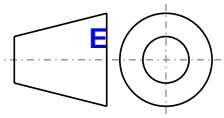

European dimension standards apply to all dimension diagrams in this document.

All dimensions are specified in mm.

Unless otherwise specified, the following general tolerances apply:

Range of nominal sizes	General tolerance according to DIN ISO 2768 (medium)
Up to 6 mm	±0.1 mm
For 6 to 30 mm	±0.2 mm
For 30 to 120 mm	±0.3 mm
For 120 to 400 mm	±0.5 mm
For 400 to 1000 mm	±0.8 mm

Table 3: Range of nominal sizes

5 Overview

Model number	Short description	Page
	Accessories	
0TB103.9	Connector 24 VDC - 3-pin female - Screw clamp terminal block 3.31 mm²	324
0TB103.91	Connector 24 VDC - 3-pin female - Cage clamp terminal block 3.31 mm²	324
5AC804.MFLT-00	Line filter	374
5AC901.FI01-00	APC910 air filter - For 1-slot APC910 - 1 pieces	373
5AC901.FI02-00	APC910 air filter - For 2-slot APC910 - 1 pieces	373
5AC901.FI05-00	APC910 air filter - For 5-slot APC910 - 1 pieces	373
5AC901.FRAM-00	APC910 slide-in compact tray	348
5ACPCE.ETH1-00	PCIe carte - 1x ETH 10/100/1000 - For APC910/PPC900	337
5CAMSC.0001-00	Internal supply cable	372
5SWUTI.0001-000	HMI Service Center USB Flash Drive - Hardware diagnostics software - For APC810/PPC800 - For APC910/PPC900 - For APC2100/PPC2100 - For APC51x/PP500 - For Automation Panel 800/900	319
	Batteries	
0AC201.91	Lithium batteries 4 pcs., 3 V / 950 mAh button cell We hereby state that the lithium cells contained in this shipment qualify as "partly regulated". Handle with care. If the package is damaged, inspect the cells, repack intact cells and protect cells against short circuits. For emergency information, call RENATA SA at + 41 61 319 28 27	327
4A0006.00-000	Lithium battery, 3 V / 950 mAh, button cell	327
	Buseinheiten	
5AC901.BX01-00	APC910 1-slot bus - 1 PCI	90
5AC901.BX01-01	APC910 1-slot bus - 1 PCI Express x8	90
5AC901.BX02-00	APC910 2-slot bus - 2 PCI	90
5AC901.BX02-01	APC910 2-slot bus - 1 PCI - 1 PCI Express x8	90
5AC901.BX02-02	APC910 2-slot bus - 2 PCI Express x4	90
5AC901.BX05-00	APC910 5-slot bus - 5 PCI	90
5AC901.BX05-01	APC910 5-slot bus - 4 PCI - 1 PCI Express x8	90
5AC901.BX05-02	APC910 5-slot bus - 2 PCI - 1 PCI Express x8 - 2 PCI Express x1	90
5AC901.BX05-03	APC910 5-slot bus - 2 PCI Express x4 - 3 PCI Express x1	90
	CFast cards	
5CFAST.016G-00	CFast card, 16 GB SLC	330
5CFAST.032G-00	CFast card, 32 GB SLC	330
5CFAST.032G-10	CFast card, 32 GB MLC	334
5CFAST.064G-10	CFast card, 64 GB MLC	334
5CFAST.128G-10	CFast card, 128 GB MLC	334
5CFAST.2048-00	CFast card, 2 GB SLC	330
5CFAST.4096-00	CFast card, 4 GB SLC	330
5CFAST.8192-00	CFast card, 8 GB SLC	330
	CPU boards	
5PC900.TS77-00	CPU board Intel Core i7 3615QE 2.3 GHz - Quad core - QM77 chipset - For APC910	84
5PC900.TS77-01	CPU board Intel Core i7 3612QE 2.1 GHz - Quad core - QM77 chipset - For APC910	84
5PC900.TS77-02	CPU board Intel Core i7 3555LE 2.5 GHz - Dual core - QM77 chipset - For APC910	84
5PC900.TS77-03	CPU board Intel Core i7 3517UE 1.7 GHz - Dual core - QM77 chipset - For APC910	84
5PC900.TS77-04	CPU board Intel Core i5 3610ME 2.7 GHz - Dual core - QM77 chipset - For APC910	84
5PC900.TS77-05	CPU board Intel Core i3 3120ME 2.4 GHz - Dual core - QM77 chipset - For APC910	84
5PC900.TS77-06	CPU board Intel Core i3 3217UE 1.6 GHz - Dual core - QM77 chipset - For APC910	84
5PC900.TS77-07	CPU board Intel Celeron 847E 1.1 GHz - Dual core - HM76 chipset - For APC910	86
5PC900.TS77-08	CPU board Intel Celeron 827E 1.4 GHz - Single core - HM76 chipset - For APC910	86
5PC900.TS77-09	CPU board Intel Celeron 1020E 2.2 GHz - Dual core - HM76 chipset - For APC910	86
5PC900.TS77-10	CPU board Intel Celeron 1047UE 1.4 GHz - Dual core - HM76 chipset - For APC910	86
	DVI cables	
5CADVI.0018-00	DVI-D cable - 1.8 m	349
5CADVI.0050-00	DVI-D cable - 5 m	349
5CADVI.0100-00	DVI-D cable - 10 m	349
	Debian 8	
5SWLIN.0540-MUL	Debian 8 - 32-bit - Multilingual - APC910 chipset QM77/HM76 - Installation (without Recovery DVD) - Only available with a new device	308
5SWLIN.0640-MUL	Debian 8 - 64-bit - Multilingual - APC910 chipset QM77/HM76 - Installation (without Recovery DVD) - Only available with a new device	308
	Drives	
5AC901.CCFA-00	CFast adapter - For slide-in compact slot	135
5AC901.CHDD-00	250 GB hard disk - Slide-in compact - SATA	96
5AC901.CHDD-01	500 GB hard disk - Slide-in compact - SATA	98
5AC901.CHDD-99	Slide-in compact kit	136
5AC901.CSSD-00	32 GB SSD SLC - Slide-in compact - SATA	103
5AC901.CSSD-01	60 GB SSD MLC - Slide-in compact - SATA	105
5AC901.CSSD-02	180 GB SSD MLC - Slide-in compact - SATA	107
5AC901.CSSD-03	60 GB SSD MLC - Slide-in compact - SATA	109
5AC901.CSSD-04	128 GB SSD MLC - Slide-in compact - SATA	112
5AC901.CSSD-05	256 GB SSD MLC - Slide-in compact - Toshiba - SATA	115
5AC901.CSSD-06	512 GB SSD MLC - Slide-in compact - Toshiba - SATA	118
5AC901.SDVW-00	DVD drive - DVD-R/RW|DVD+R/RW - Slide-in	137
5AC901.SSCA-00	Slide-in compact adapter - For slide-in compact drives	140
5ACPCI.RAIC-06	PCI RAID System 2x 500 GB - SATA	141

Model number	Short description	Page
5MMHDD.0500-00	500 GB hard disk - SATA	100
5MMSSD.0060-00	60 GB SSD MLC - Intel - SATA	120
5MMSSD.0060-01	60 GB SSD MLC - Intel - SATA	122
5MMSSD.0128-01	128 GB SSD MLC - Toshiba - SATA	125
5MMSSD.0180-00	180 GB SSD MLC - Intel - SATA	128
5MMSSD.0256-00	256 GB SSD MLC - Toshiba - SATA	130
5MMSSD.0512-00	512 GB SSD MLC - Toshiba - SATA	133
	Fan kit	
5AC901.FA01-00	APC910 fan kit - For 5PC910.SX01-00	93
5AC901.FA02-00	APC910 fan kit - For 5PC910.SX02-00	94
5AC901.FA05-00	APC910 fan kit - For 5PC910.SX05-00 system unit	95
	Front cover	
5AC901.FF01-00	Front cover for 1-slot APC910 - Orange	190
5AC901.FF01-01	Front cover for 1-slot APC910 - Dark gray	190
5AC901.FF01-02	Front cover for 1-slot APC910 - Dark gray - Without logo	190
5AC901.FF01-03	Front cover for 1-slot APC910 - Orange - Without logo	190
5AC901.FF02-00	Front cover for 2-slot APC910 - Orange	190
5AC901.FF02-01	Front cover for 2-slot APC910 - Dark gray	190
5AC901.FF02-02	Front cover for 2-slot APC910 - Dark gray - Without logo	190
5AC901.FF02-03	Front cover for 2-slot APC910 - Orange - Without logo	190
5AC901.FF05-00	Front cover for 5-slot APC910 - Orange	190
5AC901.FF05-01	Front cover for 5-slot APC910 - Dark gray	190
5AC901.FF05-02	Front cover for 5-slot APC910 - Dark gray - Without logo	190
5AC901.FF05-03	Front cover for 5-slot APC910 - Orange - Without logo	190
	Heat sink	
5AC901.HS00-00	APC910 heat sink, active	92
5AC901.HS01-00	APC910 heat sink, passive	92
	Interface options	
5AC901.I485-00	Interface card - 1x RS232/422/485 interface - For APC910/PPC900	144
5AC901.ICAN-00	Interface card - 1x CAN interface - For APC910/PPC900	149
5AC901.IETH-00	Interface card - 1x ETH 10/100/1000 - For APC910/PPC900	164
5AC901.IHDA-00	Interface card - 1x audio interface (1x MIC/1x Line In/1x OUT) - For APC910/PPC900	152
5AC901.IPLK-00	Interface card - 1x POWERLINK interface - 2 MB SRAM - For APC910/PPC900	156
5AC901.IRDY-00	Interface card - Ready relay - For APC910/PPC900	160
5AC901.ISIO-00	Interface card - System I/O - For APC910/PPC900	162
5AC901.ISRM-00	Interface cards - 2 MB SRAM - For APC910/PPC900	154
	Main memory	
5MMDDR.1024-03	SO-DIMM DDR3, 1024 MB	88
5MMDDR.2048-03	SO-DIMM DDR3, 2048 MB	88
5MMDDR.4096-03	SO-DIMM DDR3, 4096 MB	88
5MMDDR.8192-03	SO-DIMM DDR3, 8192 MB	88
	Monitor/Panel options	
5AC901.LDPO-00	DisplayPort transmitter	166
5AC901.LSD3-00	SDL3 transmitter	171
5AC901.LSDL-00	SDL/DVI transmitter	168
	RS232 cables	
9A0014.02	RS232 extension cable for remote operation of display unit with touch screen, 1.8 m	370
9A0014.05	RS232 extension cable for remote operation of display unit with touch screen, 5 m	370
9A0014.10	RS232 extension cable for remote operation of display unit with touch screen, 10 m	370
	SDL cable 45° connectors	
5CASDL.0018-01	SDL cable - 45 degree connector - 1.8 m	355
5CASDL.0050-01	SDL cable - 45 degree connector - 5 m	355
5CASDL.0100-01	SDL cable - 45 degree connector - 10 m	355
5CASDL.0150-01	SDL cable - 45 degree connector - 15 m	355
	SDL cables	
5CASDL.0008-00	SDL cable - 0.8 m	352
5CASDL.0018-00	SDL cable - 1.8 m	352
5CASDL.0050-00	SDL cable - 5 m	352
5CASDL.0100-00	SDL cable - 10 m	352
5CASDL.0150-00	SDL cable - 15 m	352
5CASDL.0200-00	SDL cable - 20 m	352
5CASDL.0250-00	SDL cable - 25 m	352
5CASDL.0300-00	SDL cable - 30 m	352
	SDL flex cables	
5CASDL.0018-03	SDL flex cable - 1.8 m	358
5CASDL.0050-03	SDL flex cable - 5 m	358
5CASDL.0100-03	SDL flex cable - 10 m	358
5CASDL.0150-03	SDL flex cable - 15 m	358
5CASDL.0200-03	SDL flex cable - 20 m	358
5CASDL.0250-03	SDL flex cable - 25 m	358
5CASDL.0300-03	SDL flex cable - 30 m	358
5CASDL.0300-13	SDL flex cable with extender - 30 m	361
5CASDL.0400-13	SDL flex cable with extender - 40 m	361
5CASDL.0430-13	SDL flex cable with extender - 43 m	361

Model number	Short description	Page
	SDL3 cables	
5CASD3.0030-00	SDL3 cable - 3 m	365
5CASD3.0050-00	SDL3 cable - 5 m	365
5CASD3.0100-00	SDL3 cable - 10 m	365
5CASD3.0150-00	SDL3 cable - 15 m	365
5CASD3.0200-00	SDL3 cable - 20 m	365
5CASD3.0300-00	SDL3 cable - 30 m	365
5CASD3.0500-00	SDL3 cable - 50 m	365
5CASD3.1000-00	SDL3 cable - 100 m	365
	System units	
5PC910.SX01-00	1-slot APC910 system unit	68
5PC910.SX02-00	2-slot APC910 system unit	73
5PC910.SX05-00	5-slot APC910 system unit	79
	Technology Guard	
0TG1000.01	Technology Guard (MSD) is provided in USB device class MSD (mass storage device)	306
0TG1000.02	Technology Guard (HID) is provided in USB device class HID (human interface device). Automation Runtime supports HIDs in version D4.09 and later.	306
1TG4600.10-5	Automation Runtime Windows, TG license	306
1TG4601.06-5	Automation Runtime Embedded, TG license	306
	Terminal blocks	
0TB2104.8000	Connector 24 VDC - 4-pin female - Screw clamps 2.5 mm²	326
	USB accessories	
5A5003.03	Front cover for drives - 5A5003.02 - 5MD900.USB2	346
5MD900.USB2-02	USB 2.0 drive combination - DVD-R/RW, DVD+R/RW - CompactFlash slot	342
5MMUSB.2048-01	USB 2.0 flash drive 2048 MB B&R	340
5MMUSB.4096-01	USB 2.0 flash drive 4096 MB B&R	340
	USB cables	
5CAUSB.0018-00	USB 2.0 connection cable - Type A - Type B connector - 1.8 m	368
5CAUSB.0050-00	USB 2.0 connection cable - Type A - Type B connector - 5 m	368
	Uninterruptible power supplies	
5AC901.BUPS-00	Battery unit 4.5 Ah - For UPS 5AC901.IUPS-00	180
5AC901.BUPS-01	Battery unit 2.2 Ah - For UPS 5AC901.IUPS-01	184
5AC901.IUPS-00	UPS - For 4.5 Ah battery	176
5AC901.IUPS-01	UPS - For 2.2 Ah battery	178
5CAUPS.0005-01	UPS cable - 0.5 m - For 5AC901.IUPS-xx	188
5CAUPS.0010-01	UPS cable - 1 m - For 5AC901.IUPS-xx	188
5CAUPS.0030-01	UPS cable - 3 m - For 5AC901.IUPS-xx	188
	Windows 10 IoT Enterprise	
5SWW10.0240-MUL	Windows 10 IoT Enterprise 2015 LTSB - 64-bit - Multilingual - APC910 QM77/HM76 chipset - License (without Recovery DVD) - Only available with a new device	290
	Windows 7 Professional/Ultimate	
5SWWI7.1100-ENG	Windows 7 Professional SP1 - 32-bit - English - DVD	296
5SWWI7.1100-GER	Windows 7 Professional SP1 - 32-bit - German - DVD	296
5SWWI7.1200-ENG	Windows 7 Professional SP1 - 64-bit - English - DVD	296
5SWWI7.1200-GER	Windows 7 Professional SP1 - 64-bit - German - DVD	296
5SWWI7.1300-MUL	Windows 7 Ultimate SP1 - 32-bit - Multilingual - DVD	296
5SWWI7.1400-MUL	Windows 7 Ultimate SP1 - 64-bit - Multilingual - DVD	296
	Windows Embedded 8.1 Industry Professional	
5SWWI8.0340-MUL	Windows Embedded 8.1 Industry Pro - 32-bit - Multilingual - For APC910 QM77/HM76 - License	293
5SWWI8.0440-MUL	Windows Embedded 8.1 Industry Pro - 64-bit - Multilingual - For APC910 QM77/HM76 - License	293
	Windows Embedded Standard 2009	
5SWWXP.0740-ENG	Windows Embedded Standard 2009 - English - For PPC900 with QM77/HM76 chipset - License	304
	Windows Embedded Standard 7	
5SWWI7.1540-ENG	Windows Embedded Standard 7 SP1 - 32-bit - English - For APC910 with QM77/HM76 chipset - License	299
5SWWI7.1640-ENG	Windows Embedded Standard 7 SP1 - 64-bit - English - For APC910 with QM77/HM76 chipset - License	299
5SWWI7.1740-MUL	Windows Embedded Standard 7 Premium SP1 - 32-bit - Multilingual - For APC910 with QM77/HM76 chipset - License	299
5SWWI7.1840-MUL	Windows Embedded Standard 7 Premium SP1 - 64-bit - Multilingual - For APC910 with QM77/HM76 chipset - License	299
	Windows XP Professional	
5SWWXP.0600-ENG	Windows XP Professional SP3 - English - CD	302
5SWWXP.0600-GER	Windows XP Professional SP3 - German - CD	302
5SWWXP.0600-MUL	Windows XP Professional SP3 - Multilingual - CD	302

Chapter 2 • Technical data

1 Introduction

1.1 Intel Core i-series processors for the most demanding tasks

The APC910 is based on the latest Intel Core i-series technology and offers maximum performance for demanding tasks such as those that involve vision systems. The proven standard design of the Automation PCs has been retained while adding many new details to keep up with the advancements being made on the PC market. Robust design for use in industrial applications around the world and long-term series availability continue to define the Automation PC series, a trend now being continued by the APC910.

1.2 Maximum performance

The APC910 has the latest Intel Core i-series technology at its heart. By further reducing the structural size of the chip and implementing a new microprocessor architecture that now integrates graphics directly into the CPU, Intel has been able to improve performance by leaps and bounds over their first Core i-series generation and Core 2 Duo systems. The rest of the PC infrastructure has also been streamlined for maximum computing performance and optimal data throughput. The APC910 now has a serial ATA-based CFast card to replace the previously used CompactFlash. And just like the APC810, hard disks and solid-state drives are connected to the PC system via the high-speed SATA interface. These devices are also well-equipped when it comes to interface options. Two Gigabit Ethernet ports, USB interfaces and onboard as well as modular serial interfaces round off the extensive capabilities of the APC910.

1.3 Availability and reliability for many productive years

Automation PCs are built for continuous operation over a period of many years. This starts with the robust welded housing that shields the electronics from the external environment, easily withstanding rough conditions. The industrial-grade coating can endure even the most aggressive environments so that even a well-seasoned Automation PC might be mistaken for new. Components have also been selected to provide many years of reliable service. These components have been designed specifically for use in industrial environments, can withstand high ambient temperatures and enjoy guaranteed long-term availability. In addition, Automation PC generations are produced in excess of 10 years – quite the exception in the otherwise fast-paced PC sector and a significant advantage for

the user. The third generation of Automation PCs, represented by the APC910, proves once again that innovation and product continuity are not incompatible goals. From the ease of connecting cables to the interfaces on top of the device to the location of mounting holes, many details have stayed the same. For the many thousands of panels in the field – whether customized or in the standard design – there is always the proven SDL interface for easily connecting the PC to its display.

1.4 Features

- Latest processor technology - Intel Core i-series (Generation 3 - Ivy Bridge)
- Up to 16 GB main memory (dual-channel memory support)
- 1 CFast slot[1)]
- 1, 2 or 5 card slots (for PCI / PCI Express (PCIe) cards)
- SATA drives (slide-in and slide-in compact slots)
- 4x USB 3.0, 1x USB 2.0
- 2x Ethernet 10/100/1000 Mbit interfaces
- 1x RS232 interface, modem-compatible
- Connections for a wide range of display devices to the monitor/panel and DisplayPort interfaces
- 24 VDC supply voltage
- Fanless operation[2)]
- BIOS (AMI)
- Real-time clock (RTC, battery-backed)
- Wide range of interface options
- Wide range of monitor/panel options

[1)] A CFast adapter allows multiple CFast cards to be used.This depends on the respective system unit.

[2)] Depends on the device configuration and ambient temperature.

1.5 System components / Configuration

The APC910 system can be assembled to meet individual requirements and operating conditions. The following components are required for operation:

- System unit
- Bus unit
- CPU board
- Heat sink
- Fan kit[3)]
- Main memory
- Drive (mass storage device such as CFast card or hard disk) for the operating system
- Operating system

1.5.1 Configuration - Base system

System units can be operated with or without a fan kit. This choice plays a role in determining the various types of heat sinks to be used.

Using a fan kit allows for operation at higher ambient temperatures. More information can be found in section "Maximum ambient temperature" on page 27.

Configuration with a fan kit

Configuration - Base system with a fan kit (active)			
System unit	Select 1		
A system unit consists of a housing and mainboard.	 5PC910.SX01-00	 5PC910.SX02-00	 5PC910.SX05-00
Bus unit	Select 1		
	5AC901.BX01-00 5AC901.BX01-01	5AC901.BX02-00 5AC901.BX02-01 5AC901.BX02-02	5AC901.BX05-00 5AC901.BX05-01 5AC901.BX05-02 5AC901.BX05-03
CPU board / Heat sink / Fan kit / Main memory			
CPU board	Select 1		
	**QM77 CPU boards** 5PC900.TS77-00 5PC900.TS77-04 5PC900.TS77-01 5PC900.TS77-05 5PC900.TS77-02 5PC900.TS77-06 5PC900.TS77-03	**HM76 CPU boards** 5PC900.TS77-07 5PC900.TS77-08 5PC900.TS77-09 5PC900.TS77-10	
Heat sink	Select 1		
	5AC901.HS00-00		
Fan kit	Select 1		
	5AC901.FA01-00	5AC901.FA02-00	5AC901.FA05-00
Main memory	Select 1 or 2		
	5MMDDR.1024-03 5MMDDR.4096-03 5MMDDR.2048-03 5MMDDR.8192-03		

Figure 1: Configuration - Base system with a fan kit

[3)] A fan kit is only mandatory when using the 5AC901.HS00-00 heat sink. If a fan kit is not used, it is important to consider the more limited ambient temperature specifications (see "Maximum ambient temperature" on page 27).

Configuration without a fan kit

Configuration - Base system without a fan kit (passive)			
System unit	Select 1		
A system unit consists of a housing and mainboard.	 5PC910.SX01-00	 5PC910.SX02-00	 5PC910.SX05-00
Bus unit	Select 1		
	5AC901.BX01-00 5AC901.BX01-01	5AC901.BX02-00 5AC901.BX02-01 5AC901.BX02-02	5AC901.BX05-00 5AC901.BX05-01 5AC901.BX05-02 5AC901.BX05-03
CPU board / Heat sink / Main memory			
CPU board	Select 1		
	**QM77 CPU boards** 5PC900.TS77-01 5PC900.TS77-04 5PC900.TS77-02 5PC900.TS77-05 5PC900.TS77-03 5PC900.TS77-06	**HM76 CPU boards** 5PC900.TS77-07 5PC900.TS77-08 5PC900.TS77-09 5PC900.TS77-10	
Heat sink	Select 1		
	5AC901.HS01-00		
Main memory [1]	Select 1 or 2		
	5MMDDR.1024-03 5MMDDR.4096-03 5MMDDR.2048-03 5MMDDR.8192-03		

1) Main memory frequency limited to 1067 MHz when operating without a fan kit.

Figure 2: Configuration - Base system without a fan kit

1.5.2 Accessory and software configuration

Accessory and software configuration			
System unit	Select 1		
A system unit consists of a housing and mainboard.	5PC910.SX01-00	5PC910.SX02-00	5PC910.SX05-00
Front covers	Select 1 [1]		
	5AC901.FF01-00 5AC901.FF01-01 5AC901.FF01-02 5AC901.FF01-03	5AC901.FF02-00 5AC901.FF02-01 5AC901.FF02-02 5AC901.FF02-03	5AC901.FF05-00 5AC901.FF05-01 5AC901.FF05-02 5AC901.FF05-03
Slide-in compact drives	Select 1		
	5AC901.CHDD-01 5AC901.CSSD-03 5AC901.CSSD-04	5AC901.CSSD-05 5AC901.CSSD-06 5AC901.CCFA-00	
Slide-in drives		Select max. 1	Select max. 2
		5AC901.SDVW-00 5AC901.SSCA-00	
RAID system	Select 1		
	5ACPCI.RAIC-06 (uses 1 PCI slot) 5MMHDD.0500-00		
IF options	Select max. 2 [2]		
	5AC901.I485-00 5AC901.ICAN-00	5AC901.IHDA-00 5AC901.IRDY-00 5AC901.IPLK-00	5AC901.ISIO-00 5AC901.ISRM-00 5AC901.IETH-00
Monitor/Panel options		Select 1	
		5AC901.LDPO-00 5AC901.LSDL-00 5AC901.LSD3-00	
UPS	Select 1 of each		
	UPS module [3] + **Battery unit** + **UPS cable** 5AC901.IUPS-00 + 5AC901.BUPS-00 5CAUPS.0005-01 5AC901.IUPS-01 + 5AC901.BUPS-01 5CAUPS.0010-01 5CAUPS.0030-01		
CFast cards	Select 1		
	5CFAST.2048-00 5CFAST.4096-00 5CFAST.8192-00	5CFAST.016G-00 5CFAST.032G-00	5CFAST.032G-10 5CFAST.064G-10 5CFAST.128G-10
PCIe-Karten	Select 1 [4]		
	5ACPCE.ETH1-00		
USB accessories	Select 1		
	5MMUSB.2048-01 5MMUSB.4096-01		
Terminal blocks	Select 1		
	Power connectors 0TB103.9 0TB103.91		
Operating systems	Select 1		
	Windows 7 5SWWI7.1100-ENG 5SWWI7.1100-GER 5SWWI7.1300-MUL 5SWWI7.1200-ENG 5SWWI7.1200-GER 5SWWI7.1400-MUL **Windows Embedded 8.1 Industry** 5SWWI8.0340-MUL 5SWWI8.0440-MUL	**Windows Embedded Standard 7** 5SWWI7.1540-ENG 5SWWI7.1640-ENG 5SWWI7.1740-MUL 5SWWI7.1840-MUL **Windows Embedded Standard 2009** 5SWWXP.0740-ENG **Debian 8 (GNU/Linux)** 5SWLIN.0540-MUL 5SWLIN.0640-MUL	**Automation Runtime** 0TG1000.01 0TG1000.02 1TG4600.10-5 1TG4601.06-5 **Windows XP** 5SWWXP.0600-ENG 5SWWXP.0600-GER 5SWWXP.0600-MUL **Windows 10** 5SWW10.0240-MUL

1) The front cover is not included with the system unit and must be ordered separately.
2) Certain limitations must be taken into account when using IF options. For more information, please refer to the section "Device interfaces" in Chapter 2 "Technical data".
3) This UPS module can only be operated in the IF option 1 slot.
4) Required = PCIe bus

Figure 3: Accessory and software configuration

2 Complete system

2.1 Temperature specifications

CPU boards can be combined with various other components such as drives, main memory, additional plug-in cards, etc. depending on the system unit and fan kit. The many different configurations possible result in varying maximum ambient temperatures, which can be seen in the following tables in this section.

> **Information:**
>
> **The maximum specified ambient temperatures for operation with and without a fan kit have been determined under worst-case conditions. Experience has shown that higher ambient temperatures can be reached in typical applications, e.g. those in Microsoft Windows. Testing and evaluation must be performed on-site by the user (temperatures can be read in BIOS or using the B&R Control Center).**

Information regarding worst-case conditions

- Thermal Analysis Tool (TAT V4.3) from Intel for simulating a 100% processor load
- BurnInTest tool (BurnInTest V4.0 Pro from Passmark Software) for simulating a 100% load on the interface via loopback adapters (serial interfaces, slide-in drives, USB interfaces, audio outputs)
- Maximum system expansion and power consumption

2.1.1 Maximum ambient temperature

Operation with a fan kit

Information:

The 5AC901.HS00-00 heat sink must be used when operating the Automation PC 910 with a fan kit.

All specifications apply to non-condensing operation.

	All temperature values are in degrees Celsius (°C) at 500 meters above sea level. The maximum ambient temperature is typically derated by 1°C per 1000 meters (starting at 500 meters above sea level).	Operation with a fan kit and 5AC901.HS00-00 heat sink										
		i7 3615QE 5PC900.TS77-00	i7 3612QE 5PC900.TS77-01	i7 3555LE 5PC900.TS77-02	i7 3517UE 5PC900.TS77-03	i5 3610ME 5PC900.TS77-04	i3 3120ME 5PC900.TS77-05	i3 3217UE 5PC900.TS77-06	CM 847E 5PC900.TS77-07	CM 827E 5PC900.TS77-08	Temperature limits	Location of sensor(s)
	Maximum ambient temperature	**55**	**55**	**55**	**55**	**55**	**55**	**55**	**55**	**55**		
	What else can also be operated at the max. ambient temperature, or are there limits?											
System units	5PC910.SX01-00	✓	✓	✓	✓	✓	✓	✓	✓	✓	-	Power supply
	5PC910.SX02-00	✓	✓	✓	✓	✓	✓	✓	✓	✓	-	
Main memory	5MMDDR.1024-03	✓	✓	✓	✓	✓	✓	✓	✓	✓	-	-
	5MMDDR.2048-03	✓	✓	✓	✓	✓	✓	✓	✓	✓	-	
	5MMDDR.4096-03	✓	✓	✓	✓	✓	✓	✓	✓	✓	-	
	5MMDDR.8192-03	✓	✓	✓	✓	✓	✓	✓	✓	✓	-	
Slide-in compact drive	5AC901.CHDD-00	50	50	50	50	50	50	50	50	50	-	Slide-in compact drive
	5AC901.CHDD-01	50	50	50	50	50	50	50	50	50	-	
	5AC901.CSSD-00	✓	✓	✓	✓	✓	✓	✓	✓	✓	-	
	5AC901.CSSD-01	✓	✓	✓	✓	✓	✓	✓	✓	✓	-	
	5AC901.CSSD-02	✓	✓	✓	✓	✓	✓	✓	✓	✓	-	
	5AC901.CCFA-00	✓	✓	✓	✓	✓	✓	✓	✓	✓	-	
Interface options	5AC901.I485-00	✓	✓	✓	✓	✓	✓	✓	✓	✓	-	Interface option
	5AC901.ICAN-00	✓	✓	✓	✓	✓	✓	✓	✓	✓	-	
	5AC901.IHDA-00	✓	✓	✓	✓	✓	✓	✓	✓	✓	-	
	5AC901.ISRM-00	✓	✓	✓	✓	✓	✓	✓	✓	✓	-	
	5AC901.IUPS-00	✓	✓	✓	✓	✓	✓	✓	✓	✓	-	
Monitor/Panel options	5AC901.LDPO-00	✓	✓	✓	✓	✓	✓	✓	✓	✓	-	Monitor/ Panel option
	5AC901.LSDL-00	✓	✓	✓	✓	✓	✓	✓	✓	✓	-	
CFast cards	5CFAST.2048-00	✓	✓	✓	✓	✓	✓	✓	✓	✓	-	-
	5CFAST.4096-00	✓	✓	✓	✓	✓	✓	✓	✓	✓	-	
	5CFAST.8192-00	✓	✓	✓	✓	✓	✓	✓	✓	✓	-	
	5CFAST.016G-00	✓	✓	✓	✓	✓	✓	✓	✓	✓	-	
	5CFAST.032G-00	✓	✓	✓	✓	✓	✓	✓	✓	✓	-	

Table 4: Ambient temperature with a fan kit

Operation without a fan kit

> **Information:**
>
> **The 5PC900.TS77-00 CPU board cannot be operated without a fan kit.**
>
> **The 5AC901.HS01-00 heat sink must be used when operating the Automation PC 910 without a fan kit.**

All specifications apply to non-condensing operation.

		Operation without a fan kit and with 5AC901.HS01-00 heat sink										
	All temperature values are in degrees Celsius (°C) at 500 meters above sea level. The maximum ambient temperature is typically derated by 1°C per 1000 meters (starting at 500 meters above sea level).	i7 3615QE 5PC900.TS77-00	i7 3612QE 5PC900.TS77-01	i7 3555LE 5PC900.TS77-02	i7 3517UE 5PC900.TS77-03	i5 3610ME 5PC900.TS77-04	i3 3120ME 5PC900.TS77-05	i3 3217UE 5PC900.TS77-06	CM 847E 5PC900.TS77-07	CM 827E 5PC900.TS77-08	Temperature limits	Location of sensor(s)
	Maximum ambient temperature	**-**	**35**	**40**	**50**	**35**	**35**	**50**	**50**	**50**		
	What else can also be operated at the max. ambient temperature, or are there limits?											
System units	5PC910.SX01-00	-	✓	✓	✓	✓	✓	✓	✓	✓	-	Power supply
	5PC910.SX02-00	-	✓	✓	✓	✓	✓	✓	✓	✓	-	
Main memory	5MMDDR.1024-03	-	✓	✓	✓	✓	✓	✓	✓	✓	-	-
	5MMDDR.2048-03	-	✓	✓	✓	✓	✓	✓	✓	✓	-	
	5MMDDR.4096-03	-	✓	✓	✓	✓	✓	✓	✓	✓	-	
	5MMDDR.8192-03	-	✓	✓	✓	✓	✓	✓	✓	✓	-	
Slide-in compact drive	5AC901.CHDD-00	-	✓	✓	45	✓	✓	45	45	45	-	Slide-in compact drive
	5AC901.CHDD-01	-	✓	✓	45	✓	✓	45	45	45	-	
	5AC901.CSSD-00	-	✓	✓	✓	✓	✓	✓	✓	✓	-	
	5AC901.CSSD-01	-	✓	✓	✓	✓	✓	✓	✓	✓	-	
	5AC901.CSSD-02	-	✓	✓	✓	✓	✓	✓	✓	✓	-	
	5AC901.CCFA-00	-	✓	✓	✓	✓	✓	✓	✓	✓	-	
Interface options	5AC901.I485-00	-	✓	✓	✓	✓	✓	✓	✓	✓	-	Interface option
	5AC901.ICAN-00	-	✓	✓	✓	✓	✓	✓	✓	✓	-	
	5AC901.IHDA-00	-	✓	✓	40	✓	✓	40	40	40	-	
	5AC901.ISRM-00	-	✓	✓	✓	✓	✓	✓	✓	✓	-	
	5AC901.IUPS-00	-	✓	✓	✓	✓	✓	✓	✓	✓	-	
Monitor/Panel options	5AC901.LDPO-00	-	✓	✓	✓	✓	✓	✓	✓	✓	-	Monitor/ Panel option
	5AC901.LSDL-00	-	✓	✓	✓	✓	✓	✓	✓	✓	-	
CFast cards	5CFAST.2048-00	-	✓	✓	✓	✓	✓	✓	✓	✓	-	-
	5CFAST.4096-00	-	✓	✓	✓	✓	✓	✓	✓	✓	-	
	5CFAST.8192-00	-	✓	✓	✓	✓	✓	✓	✓	✓	-	
	5CFAST.016G-00	-	✓	✓	✓	✓	✓	✓	✓	✓	-	
	5CFAST.032G-00	-	✓	✓	✓	✓	✓	✓	✓	✓	-	

Table 5: Ambient temperature without a fan kit

2.1.1.1 How to determine the maximum ambient temperature

1. Select the CPU board (operation with or without a fan kit).
2. The "Maximum ambient temperature" row shows the maximum ambient temperature for the complete system, including the respective CPU board.

> **Information:**
>
> **Maximum temperature data is for operation at 500 meters. The maximum ambient temperature is typically derated by 1°C per 1000 meters (starting at 500 meters above sea level).**

3. Incorporating additional drives, main memory, interface options, etc. can change the temperature limits of an APC910 system.

If there is a "✓" next to the component, it can be used at the maximum ambient temperature of the complete system without problems.

If there is a specific temperature next to the component, for example "45", then the ambient temperature of the complete APC910 system is not permitted to exceed this temperature.

2.1.2 Minimum ambient temperature

For systems containing the following components, the minimum ambient temperature for non-condensing operation is +5°C: 5AC901.SDVW-00.

If none of these components are used, then the minimum ambient temperature for non-condensing operation is 0°C.

2.1.3 Temperature monitoring

Sensors monitor temperature values at various locations in the APC910 device. The location of these temperature sensors is illustrated in Fig. 4 " Temperature sensor locations" on page 30. The values listed in Tab. 6 "Temperature sensor locations" on page 30 represent the defined maximum temperature for this measurement point. An alarm is not triggered if this temperature is exceeded. These temperatures can be read in BIOS or approved Microsoft Windows operating systems using the B&R Control Center.

In addition, the hard disks for APC910 systems available from B&R are equipped with S.M.A.R.T, or Self-Monitoring, Analysis and Reporting Technology. This makes it possible to read various parameters such as temperature using software (e.g. HDD Thermometer, a freeware program) on approved Microsoft operating systems.

2.1.4 Temperature sensor positions

Sensors indicate temperature values at various locations in the APC910. These temperatures[4] can be read in BIOS (Advanced - OEM features - System board features / CPU board features - Temperature values) or Microsoft Windows operating systems using the B&R Control Center[5].

For applications that do not run in Windows, temperatures can be evaluated using the B&R implementation guide. In addition to the implementation guide, there are also programs available in MS-DOS.

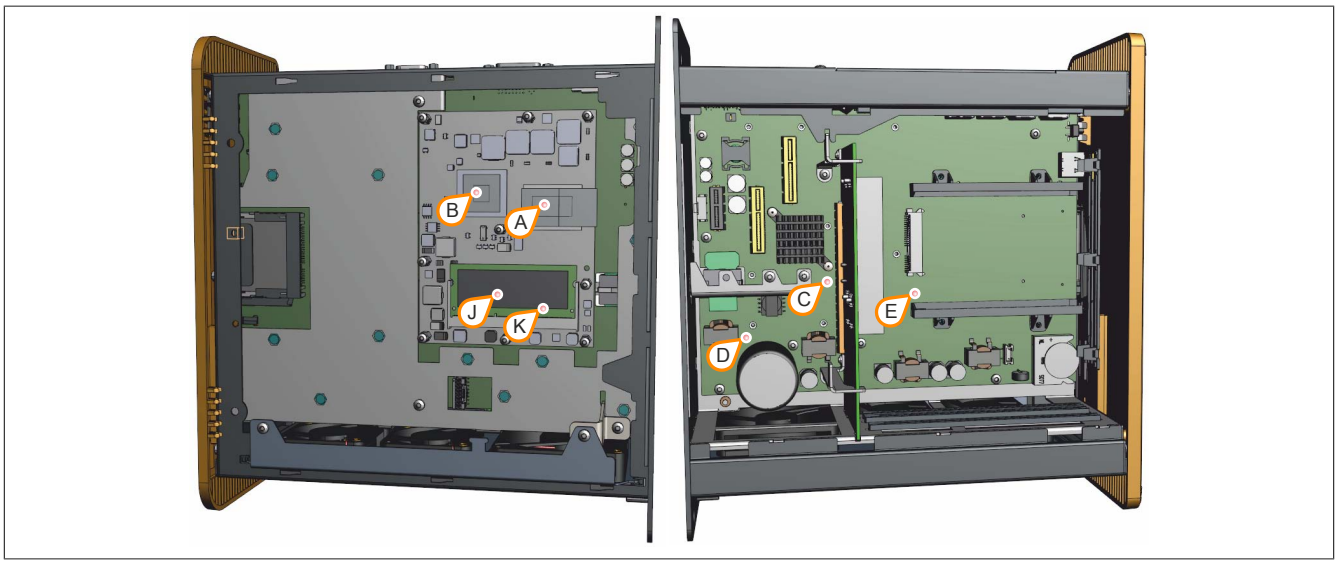

Figure 4: Temperature sensor locations

ADI sensors	Position	Measurement point for	Measurement	Max. specified
CPU board Sensor 2	A	CPU	Temperature of the processor (sensor integrated in the processor)	95°C
CPU board Sensor 1	B	Board controller	Temperature of the board controller (sensor integrated on the CPU board)	95°C
System unit Sensor 3	C	Main memory	Temperature of the main memory area (sensor integrated on the mainboard)	75°C
System unit Sensor 1	D	Board power supply	Temperature of the board power supply (sensor on the mainboard)	90°C
System unit Sensor 2	E	Slide-in compact	Temperature of the slide-in compact drive area (sensor on the mainboard)	Depends on the drive
Slide-in drive 1	F	Slide-in drive 1	Temperature of slide-in drive 1 (sensor integrated in the slide-in slot)	Depends on the drive
Slide-in drive 2	G	Slide-in drive 2	Temperature of slide-in drive 2 (sensor integrated in the slide-in slot)	Depends on the drive
-	H	Interface option[1]	Temperature of the interface option (sensor integrated on the interface option)	Depends on the interface option
Display Link Sensor	I	Monitor/Panel option	Temperature of the monitor/panel option (sensor integrated on the monitor/panel option)	Depends on the monitor/panel option
CPU board Sensor 3	J	SO-DIMM 1[2]	Temperature of main memory 1 (sensor integrated on main memory 1).	85°C
CPU board Sensor 4	K	SO-DIMM 2[2]	Temperature of main memory 2 (sensor integrated on main memory 2).	85°C

Table 6: Temperature sensor locations

1) A temperature sensor is currently not integrated in the interface options.
2) A valid temperature is only provided if the module is connected and equipped with a temperature sensor. Otherwise, the value 0 is output in the ADI Control Center and BIOS; an alarm is also output in the ADI Control Center.

[4] Measured temperatures approximate the immediate ambient temperature but may also be influenced by neighboring components.
[5] The ADI driver that includes the B&R Control Center is available in the Downloads section of the B&R website (www.br-automation.com).

2.1.5 Fan control

The MTCX constantly monitors the temperature using temperature sensors, which directly determines how the fans are controlled. Their speed depends on the measured temperature. Limit values may depend on the MTCX firmware version being used.

Position	Measurement point for	Startup temperature	Max. fan speed at:
A	CPU	65°C	81°C
B	Board controller	65°C	81°C
C	Main memory	60°C	76°C
D	Board power supply	70°C	86°C
E	Slide-in compact	60°C	76°C
F	Slide-in drive 1	5AC901.SDVW-00: 44°C, 5AC901.SSCA-00: 55°C	5AC901.SDVW-00: 60°C, 5AC901.SSCA-00: 71°C
G	Slide-in drive 2	5AC901.SDVW-00: 44°C, 5AC901.SSCA-00: 55°C	5AC901.SDVW-00: 60°C, 5AC901.SSCA-00: 71°C
H	Interface option[1)]	-	-
I	Monitor/Panel option	5AC901.LDPO-00: 60°C, 5AC901.LSDL-00: 60°C, 5AC901.LSD3-00: 60°C	5AC901.LDPO-00: 76°C, 5AC901.LSDL-00: 76°C, 5AC901.LSD3-00: 76°C
J	SO-DIMM 1	60°C	76°C
K	SO-DIMM 2	60°C	76°C

Table 7: Temperature sensor locations

1) A temperature sensor is currently not integrated in the interface options.

Once the startup temperature is reached, the device is started at the minimum fan speed. The maximum fan speed is reached at a startup temperature of 16°C. The fan speed in this area is controlled depending on the temperature.

Example with slide-in drive 5AC901.SDVW-00: 44°C + 16°C = 60°C --> Maximum fan speed

The fans will only be shut off again if the evaluation temperature is more than 6°C below the switch-on temperature for a period of 4 hours (overshoot time).

2.2 Humidity specifications

The following table lists the minimum and maximum relative humidity values (non-condensing) for the individual components that are relevant for the humidity limitations of a complete system. The lowest and highest common values are always used when establishing these limits.

Component		Operation	Storage	Transport
System units (all models)		5 to 90%	5 to 95%	5 to 95%
QM77/HM76 CPU boards		10 to 90%	5 to 95%	5 to 95%
Main memory for CPU boards		10 to 90%	5 to 95%	5 to 95%
Slide-in compact drives	5AC901.CHDD-00	5 to 95%	5 to 95%	5 to 95%
	5AC901.CHDD-01	8 to 90%	5 to 95%	5 to 95%
	5AC901.CSSD-00	5 to 95%	5 to 95%	5 to 95%
	5AC901.CSSD-01	5 to 95%	5 to 95%	5 to 95%
	5AC901.CSSD-02	5 to 95%	5 to 95%	5 to 95%
	5AC901.CSSD-03 ≤ Rev. C0	8 to 90%	8 to 95%	8 to 95%
	5AC901.CSSD-03 ≥ Rev. D0	5 to 90%	5 to 95%	5 to 95%
	5AC901.CSSD-04 ≤ Rev. C0	8 to 90%	8 to 95%	8 to 95%
	5AC901.CSSD-04 ≥ Rev. D0	5 to 90%	5 to 95%	5 to 95%
	5AC901.CSSD-05	5 to 90%	5 to 95%	5 to 95%
	5AC901.CSSD-06	5 to 90%	5 to 95%	5 to 95%
	5AC901.CCFA-00	5 to 90%	5 to 95%	5 to 95%
Slide-in drives	5AC901.SDVW-00	8 to 80%	5 to 95%	5 to 95%
RAID system	5ACPCI.RAIC-06	8 to 90%	5 to 95%	5 to 95%
Interface options	5AC901.I485-00	5 to 90%	5 to 95%	5 to 95%
	5AC901.ICAN-00	5 to 90%	5 to 95%	5 to 95%
	5AC901.IETH-00	5 to 90%	5 to 95%	5 to 95%
	5AC901.IHDA-00	5 to 90%	5 to 95%	5 to 95%
	5AC901.ISRM-00	5 to 90%	5 to 95%	5 to 95%
	5AC901.IPLK-00	5 to 90%	5 to 95%	5 to 95%
	5AC901.IRDY-00	5 to 90%	5 to 95%	5 to 95%
	5AC901.ISIO-00	5 to 90%	5 to 95%	5 to 95%
	5AC901.IUPS-00	5 to 90%	5 to 95%	5 to 95%
	5AC901.IUPS-01	5 to 90%	5 to 95%	5 to 95%
Monitor/Panel options	5AC901.LDPO-00	5 to 90%	5 to 95%	5 to 95%
	5AC901.LSDL-00	5 to 90%	5 to 95%	5 to 95%
	5AC901.LSD3-00	5 to 90%	5 to 95%	5 to 95%
Accessories	5MMUSB.2048-01 USB flash drive	10 to 90%	5 to 90%	5 to 90%
	5MMUSB.4096-01 USB flash drive	10 to 90%	5 to 90%	5 to 90%
	5CFAST.xxxx-00 CFast cards	Max. 85%	Max. 85%	Max. 85%
	5CFAST.xxxx-10 CFast cards	10 to 95%	10 to 95%	10 to 95%
	5MD900.USB2-02 USB media drive	20 to 80%	5 to 90% / 5 to 95%	5 to 90% / 5 to 95%
	PCIe card 5ACPCE.ETH1-00	5 to 90%	5 to 95%	5 to 95%

Table 8: Overview of humidity specifications for individual components

The specifications listed correspond to the relative humidity (non-condensing) at an ambient temperature of 30°C. More detailed information about specific temperature-dependent humidity values can be found in the technical data for the individual components.

2.3 Power management

2.3.1 Power supply - Block diagram

The following block diagram illustrates the simplified structure of the APC910 voltage supply for system units.

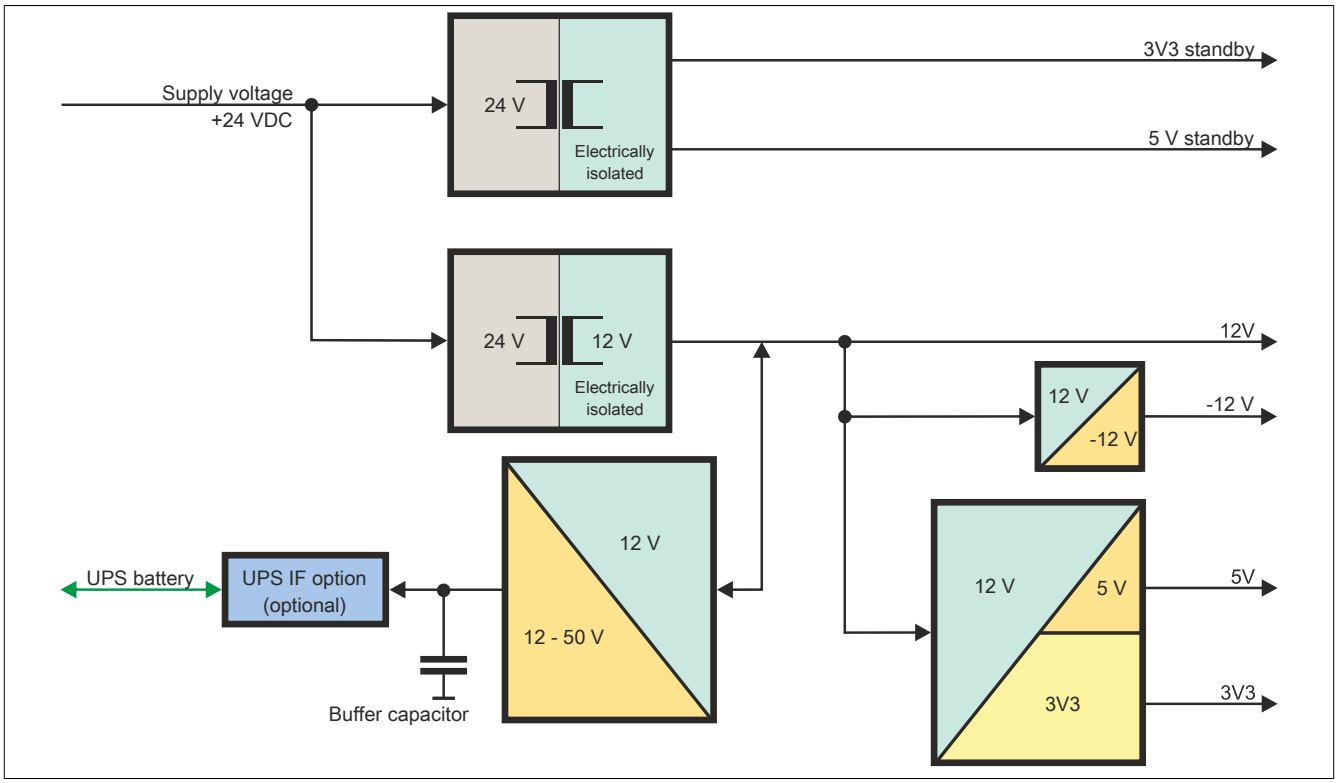

Figure 5: Voltage supply for system units

2.3.2 Power calculation with 5PC910.SX01-00

Information:

The power supply's maximum total power of 130 watts must not be exceeded.

Information: All values in **watts** The values for the **suppliers** are maximum values. The values for the **consumers** are average maximum values but not peak values.	CPU board											Current system
	5PC900.TS77-00	5PC900.TS77-01	5PC900.TS77-02	5PC900.TS77-03	5PC900.TS77-04	5PC900.TS77-05	5PC900.TS77-06	5PC900.TS77-07	5PC900.TS77-08	5PC900.TS77-09	5PC900.TS77-10	Enter values in this column
Total power supply power (maximum)												**130**
Total power supply +12 V — **Maximum possible**												**130**
CPU board, permanent consumers	53	43	33	25	43	43	25	25	25	43	25	
1024 MB RAM, each 2 W, max. 2 pcs.												
2048 MB RAM, each 2.5 W, max. 2 pcs.												
4096 MB RAM, each 3 W, max. 2 pcs.												
8192 MB RAM, each 3.5 W, max. 2 pcs.												
Fan kit, optional	3	3	3	3	3	3	3	3	3	3	3	
UPS IF option 5AC901.IUPS-00 during operation, optional	30	30	30	30	30	30	30	30	30	30	30	
UPS IF option 5AC901.IUPS-01 during operation, optional	25	25	25	25	25	25	25	25	25	25	25	
External consumers, optional	10	10	10	10	10	10	10	10	10	10	10	
PCI card power rating, optional (max. 3 W without fan kit, max. 6 W with fan kit)[1]												
PCIe x8 card power rating, optional (max. 3 W without fan kit, max. 20 W with fan kit)[1]												
-12 V — **Maximum possible at -12 V**												**1.2**
PCI card power rating, optional (max. 1.2 W with or without fan kit)[1]												
Consumers -12 V ∑												
Consumers ∑												
+5 V — **Maximum possible at +5 V**												**45**
Slide-in compact (HDD / SSD)	4	4	4	4	4	4	4	4	4	4	4	
5x USB peripherals, each max. 5 W												
Interface option, optional[2], max. 2 connections												
External consumers, optional	5	5	5	5	5	5	5	5	5	5	5	
PCI card power rating, optional (max. 3 W without fan kit, max. 20 W with fan kit)[1]												
Consumers +5 V ∑												
3V3 — **Maximum possible at 3V3**												**30**
System unit, permanent consumers	5	5	5	5	5	5	5	5	5	5	5	
CFast card	1	1	1	1	1	1	1	1	1	1	1	
Interface option, optional[2]												
PCI card power rating, optional (max. 3 W without fan kit, max. 15 W with fan kit)[1]												
PCIe x8 card power rating, optional (max. 3 W without fan kit, max. 10 W with fan kit)[1]												
Consumers 3V3 ∑												
Total power supply, consumers ∑												

1) The total power of one PCI/PCIe card per slot (= sum of the power consumption for each voltage range) is not permitted to exceed the max. power rating for operation with or without a fan kit.

2) Power ratings for interface options are listed in the table below.

Table 9: 1-slot APC variant - Power calculation table

In order to accurately determine the total power of the complete system, the values in this table must be entered in the power calculation table if one or more of these options are connected to the system unit.

Component	Model number	+5 V	3V3	12 V	Power consumption Total
Interface option					
RS232/RS422/RS485 IF option	5AC901.I485-00	1 W	-	-	1 W
CAN IF option	5AC901.ICAN-00	1 W	-	-	1 W
Audio IF option	5AC901.IHDA-00	0.2 W	0.2 W	-	0.4 W
POWERLINK IF option	5AC901.IPLK-00	-	1.5 W	-	1.5 W
SRAM IF option	5AC901.ISRM-00	-	2 W	-	2 W
Ready relay IF option	5AC901.IRDY-00	0.2 W	-	-	0.2 W
System I/O IF option	5AC901.ISIO-00	-	0.5 W	-	0.5 W

Table 10: Interface and monitor/panel options - Power rating table

Component	Model number	+5 V	3V3	12 V	Power consumption Total
UPS IF option	5AC901.IUPS-00 in standby	-	-	0.1 W	0.1 W
UPS IF option	5AC901.IUPS-01 in standby	-	-	0.1 W	0.1 W
Gigabit Ethernet IF option	5AC901.IETH-00	-	1 W	-	1 W
Monitor/Panel option					
DisplayPort transmitter	5AC901.LDPO-00	-	0.2 W	-	0.2 W
SDL/DVI transmitter	5AC901.LSDL-00	-	1 W	-	1 W
SDL3 transmitter	5AC901.LSD3-00	2.2 W	1.8 W	-	4 W
PCIe cards					
PCIe x1 Ethernet card	5ACPCE.ETH1-00	-	1 W	-	1 W

Table 10: Interface and monitor/panel options - Power rating table

2.3.3 Power calculation with 5PC910.SX02-00

Information:

The power supply's maximum total power of 130 watts must not be exceeded.

Information:	CPU board											Current system
All values in **watts** The values for the **suppliers** are maximum values. The values for the **consumers** are average maximum values but not peak values.	5PC900.TS77-00	5PC900.TS77-01	5PC900.TS77-02	5PC900.TS77-03	5PC900.TS77-04	5PC900.TS77-05	5PC900.TS77-06	5PC900.TS77-07	5PC900.TS77-08	5PC900.TS77-09	5PC900.TS77-10	Enter values in this column
Total power supply power (maximum)												**130**
Total power supply +12 V — **Maximum possible**												**130**
CPU board, permanent consumers	53	43	33	25	43	43	25	25	25	43	25	
1024 MB RAM, each 2 W, max. 2 pcs.												
2048 MB RAM, each 2.5 W, max. 2 pcs.												
4096 MB RAM, each 3 W, max. 2 pcs.												
8192 MB RAM, each 3.5 W, max. 2 pcs.												
Fan kit, optional	3	3	3	3	3	3	3	3	3	3	3	
UPS IF option 5AC901.IUPS-00 during operation, optional	30	30	30	30	30	30	30	30	30	30	30	
UPS IF option 5AC901.IUPS-01 during operation, optional	25	25	25	25	25	25	25	25	25	25	25	
External consumers, optional	10	10	10	10	10	10	10	10	10	10	10	
PCI card power rating, optional (max. 3 W without fan kit, max. 6 W with fan kit)[1]												
PCIe x8 card power rating, optional (max. 3 W without fan kit, max. 20 W with fan kit)[1]												
-12 V — **Maximum possible at -12 V**												**1.2**
PCI card power rating, optional (max. 1.2 W with or without fan kit)[1]												
Consumers -12 V ∑												
Consumers ∑												
+5 V — **Maximum possible at +5 V**												**45**
Slide-in compact (HDD / SSD)	4	4	4	4	4	4	4	4	4	4	4	
Slide-in (DVD / ...)	4	4	4	4	4	4	4	4	4	4	4	
5x USB peripherals, each max. 5 W												
Interface option, optional[2], max. 2 connections												
Monitor/Panel option, optional[2]												
External consumers, optional	5	5	5	5	5	5	5	5	5	5	5	
PCI card power rating, optional (max. 3 W without fan kit, max. 20 W with fan kit)[1]												
Consumers +5 V ∑												
3V3 — **Maximum possible at 3V3**												**30**
System unit, permanent consumers	5	5	5	5	5	5	5	5	5	5	5	
CFast card	1	1	1	1	1	1	1	1	1	1	1	
Interface option, optional[2]												
Monitor/Panel option, optional[2]												
PCI card power rating, optional (max. 3 W without fan kit, max. 15 W with fan kit)[1]												
PCIe x8 card power rating, optional (max. 3 W without fan kit, max. 10 W with fan kit)[1]												
Consumers 3V3 ∑												
Total power supply, consumers ∑												

1) The total power of one PCI/PCIe card per slot (= sum of the power consumption for each voltage range) is not permitted to exceed the max. power rating for operation with or without a fan kit.

2) Power ratings for interface and monitor/panel options are listed in the table below.

Table 11: 2-slot APC variant - Power calculation table

In order to accurately determine the total power of the complete system, the values in this table must be entered in the power calculation table if one or more of these options are connected to the system unit.

Component	Model number	+5 V	3V3	12 V	Power consumption Total
Interface option					
RS232/RS422/RS485 IF option	5AC901.I485-00	1 W	-	-	1 W
CAN IF option	5AC901.ICAN-00	1 W	-	-	1 W
Audio IF option	5AC901.IHDA-00	0.2 W	0.2 W	-	0.4 W
POWERLINK IF option	5AC901.IPLK-00	-	1.5 W	-	1.5 W

Table 12: Interface and monitor/panel options - Power rating table

Component	Model number	+5 V	3V3	12 V	Power consumption Total
SRAM IF option	5AC901.ISRM-00	-	2 W	-	2 W
Ready relay IF option	5AC901.IRDY-00	0.2 W	-	-	0.2 W
System I/O IF option	5AC901.ISIO-00	-	0.5 W	-	0.5 W
UPS IF option	5AC901.IUPS-00 in standby	-	-	0.1 W	0.1 W
UPS IF option	5AC901.IUPS-01 in standby	-	-	0.1 W	0.1 W
Gigabit Ethernet IF option	5AC901.IETH-00	-	1 W	-	1 W
Monitor/Panel option					
DisplayPort transmitter	5AC901.LDPO-00	-	0.2 W	-	0.2 W
SDL/DVI transmitter	5AC901.LSDL-00	-	1 W	-	1 W
SDL3 transmitter	5AC901.LSD3-00	2.2 W	1.8 W	-	4 W
PCIe cards					
PCIe x1 Ethernet card	5ACPCE.ETH1-00	-	1 W	-	1 W

Table 12: Interface and monitor/panel options - Power rating table

2.3.4 Power calculation with 5PC910.SX05-00

Information:

The power supply's maximum total power of 130 watts must not be exceeded.

Information:	CPU board											Current system
All values in **watts** The values for the **suppliers** are maximum values. The values for the **consumers** are average maximum values but not peak values.	5PC900.TS77-00	5PC900.TS77-01	5PC900.TS77-02	5PC900.TS77-03	5PC900.TS77-04	5PC900.TS77-05	5PC900.TS77-06	5PC900.TS77-07	5PC900.TS77-08	5PC900.TS77-09	5PC900.TS77-10	Enter values in this column
Total power supply power (maximum)												**130**
Total power supply +12 V — **Maximum possible**												**130**
CPU board, permanent consumers	53	43	33	25	43	43	25	25	25	43	25	
1024 MB RAM, each 2 W, max. 2 pcs.												
2048 MB RAM, each 2.5 W, max. 2 pcs.												
4096 MB RAM, each 3 W, max. 2 pcs.												
8192 MB RAM, each 3.5 W, max. 2 pcs.												
Fan kit, optional	5	5	5	5	5	5	5	5	5	5	5	
UPS IF option 5AC901.IUPS-00 during operation, optional	30	30	30	30	30	30	30	30	30	30	30	
UPS IF option 5AC901.IUPS-01 during operation, optional	25	25	25	25	25	25	25	25	25	25	25	
External consumers, optional	10	10	10	10	10	10	10	10	10	10	10	
PCI card power rating, optional (max. 3 W without fan kit, max. 6 W with fan kit)[1]												
PCIe x8 card power rating, optional (max. 3 W without fan kit, max. 20 W with fan kit)[1]												
-12 V — **Maximum possible at -12 V**												**1.2**
PCI card power rating, optional (max. 1.2 W with or without fan kit)[1]												
Consumers -12 V ∑												
Consumers ∑												
+5 V — **Maximum possible at +5 V**												**45**
Slide-in compact (HDD / SSD)	4	4	4	4	4	4	4	4	4	4	4	
Slide-in (DVD / ...)	4	4	4	4	4	4	4	4	4	4	4	
5x USB peripherals, each max. 5 W												
Interface option, optional[2], max. 2 connections												
Monitor/Panel option, optional[2]												
External consumers, optional	5	5	5	5	5	5	5	5	5	5	5	
PCI card power rating, optional (max. 3 W without fan kit, max. 20 W with fan kit)[1]												
Consumers +5 V ∑												
3V3 — **Maximum possible at 3V3**												**30**
System unit, permanent consumers	5	5	5	5	5	5	5	5	5	5	5	
CFast card	1	1	1	1	1	1	1	1	1	1	1	
Interface option, optional[2]												
Monitor/Panel option, optional[2]												
PCI card power rating, optional (max. 3 W without fan kit, max. 15 W with fan kit)[1]												
PCIe x8 card power rating, optional (max. 3 W without fan kit, max. 10 W with fan kit)[1]												
Consumers 3V3 ∑												
Total power supply, consumers ∑												

1) The total performance of one PCI/PCIe card per slot (= sum of the power consumption for each voltage range) is not permitted to exceed the limits stated for operation with or without a fan kit.

2) Power ratings for interface and monitor/panel options are listed in the table below.

Table 13: 5-slot APC variant - Power calculation table

In order to accurately determine the total power of the complete system, the values in this table must be entered in the power calculation table if one or more of these options are connected to the system unit.

Component	Model number	+5 V	3V3	12 V	Power consumption Total
Interface option					
RS232/RS422/RS485 IF option	5AC901.I485-00	1 W	-	-	1 W
CAN IF option	5AC901.ICAN-00	1 W	-	-	1 W
Audio IF option	5AC901.IHDA-00	0.2 W	0.2 W	-	0.4 W
POWERLINK IF option	5AC901.IPLK-00	-	1.5 W	-	1.5 W

Table 14: Interface and monitor/panel options - Power rating table

Component	Model number	+5 V	3V3	12 V	Power consumption Total
SRAM IF option	5AC901.ISRM-00	-	2 W	-	2 W
Ready relay IF option	5AC901.IRDY-00	0.2 W	-	-	0.2 W
System I/O IF option	5AC901.ISIO-00	-	0.5 W	-	0.5 W
UPS IF option	5AC901.IUPS-00 in standby	-	-	0.1 W	0.1 W
UPS IF option	5AC901.IUPS-01 in standby	-	-	0.1 W	0.1 W
Gigabit Ethernet IF option	5AC901.IETH-00	-	1 W	-	1 W
Monitor/Panel option					
DisplayPort transmitter	5AC901.LDPO-00	-	0.2 W	-	0.2 W
SDL/DVI transmitter	5AC901.LSDL-00	-	1 W	-	1 W
SDL3 transmitter	5AC901.LSD3-00	2.2 W	1.8 W	-	4 W
PCIe cards					
PCIe x1 Ethernet card	5ACPCE.ETH1-00	-	1 W	-	1 W

Table 14: Interface and monitor/panel options - Power rating table

2.4 Serial number sticker

A unique serial number sticker with a barcode (Code 128) is affixed to each B&R device for identification purposes. This serial number represents all of the individual components built into the system (model number, name, revision, serial number, delivery date and duration of warranty).

A sticker with detailed information about the installed components can also be found on the back of the mounting plate.

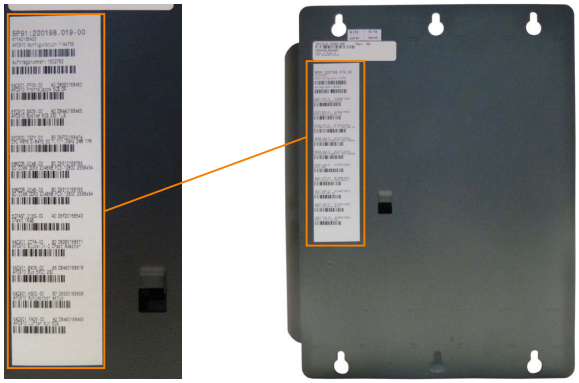

Figure 6: Serial number sticker (back)

The serial number represents all of the individual components built into the system (serial number, model number, revision, delivery date and duration of warranty). This information can also be found on the B&R website by entering the serial number of the complete system in the search field tab (after selecting the "Serial number" option) at the top of the website (www.br-automation.com). The search provides a detailed list of installed components.

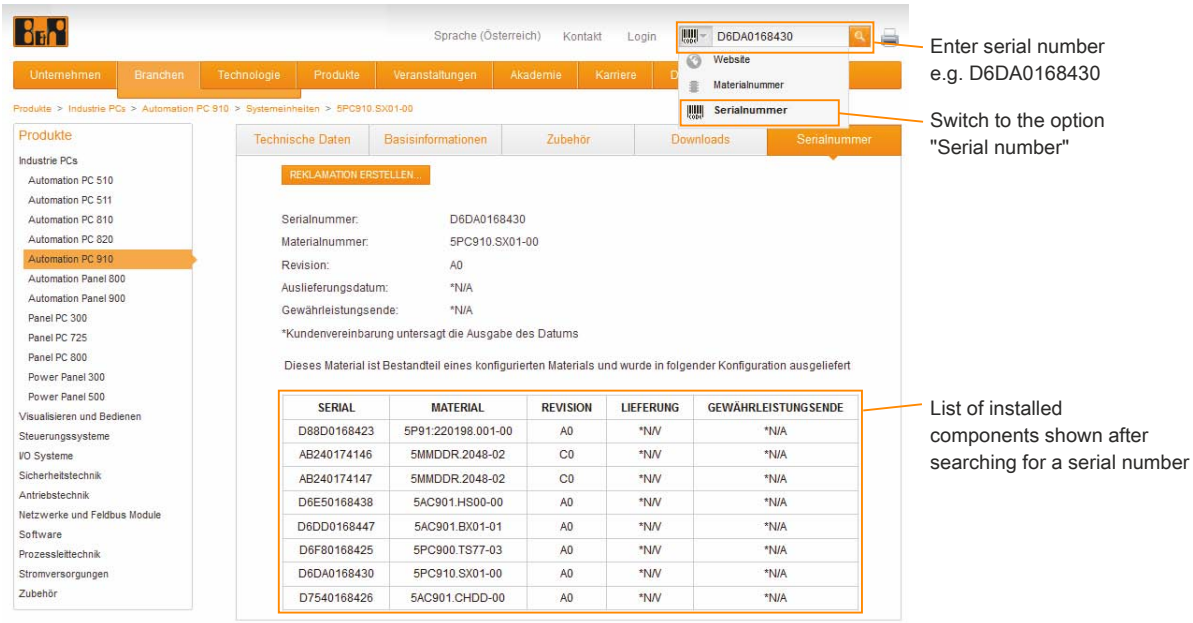

Figure 7: Searching for a serial number on the B&R website

2.5 Block diagrams

The following block diagrams illustrate the simplified structure of system units with a CPU board in relation to the various bus units.

2.5.1 5PC910.SX01-00 system unit + 5AC901.BX01-00 bus unit

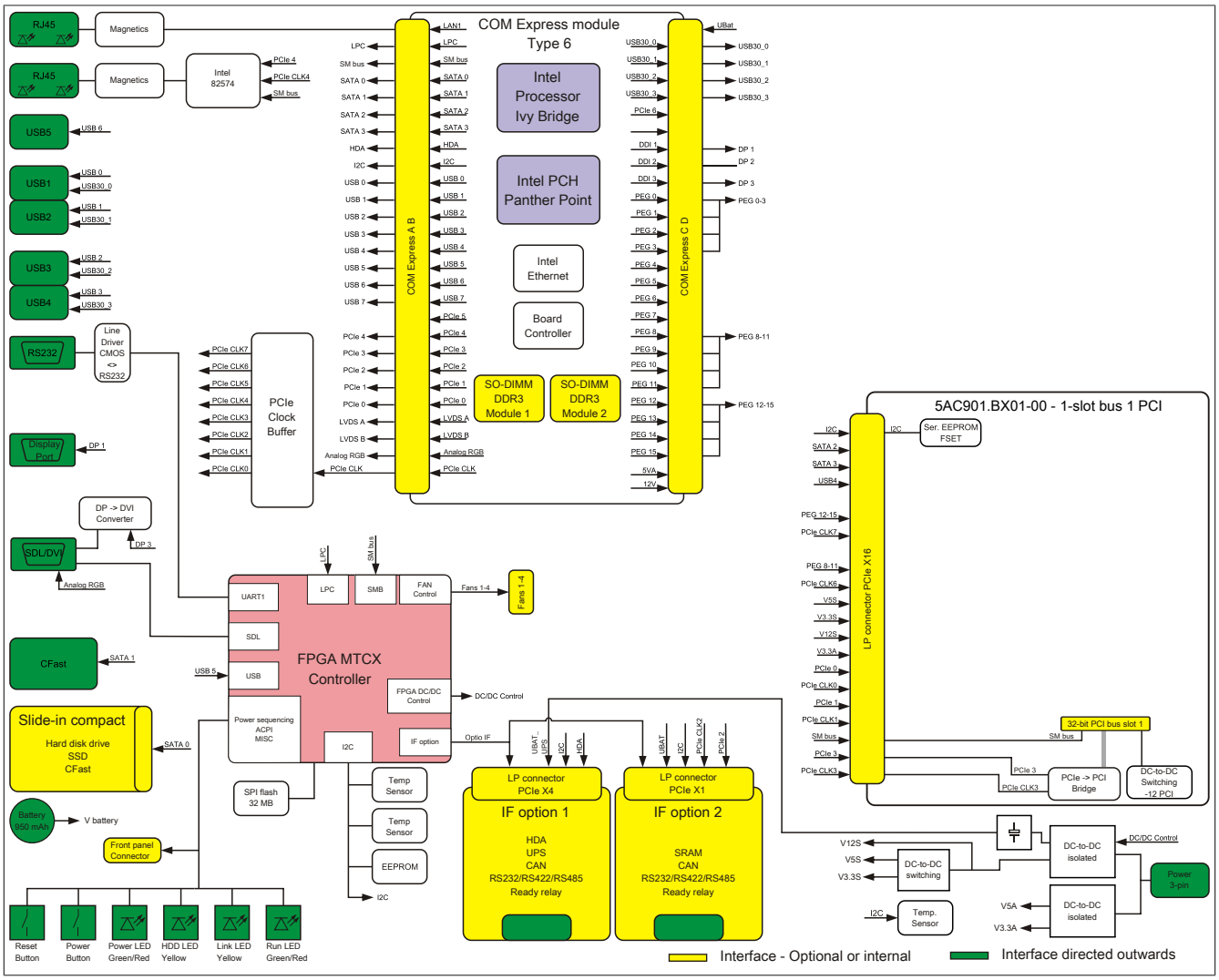

Figure 8: 5PC910.SX01-00 system unit + 5AC901.BX01-00 bus unit - Block diagram

2.5.2 5PC910.SX01-00 system unit + 5AC901.BX01-01 bus unit

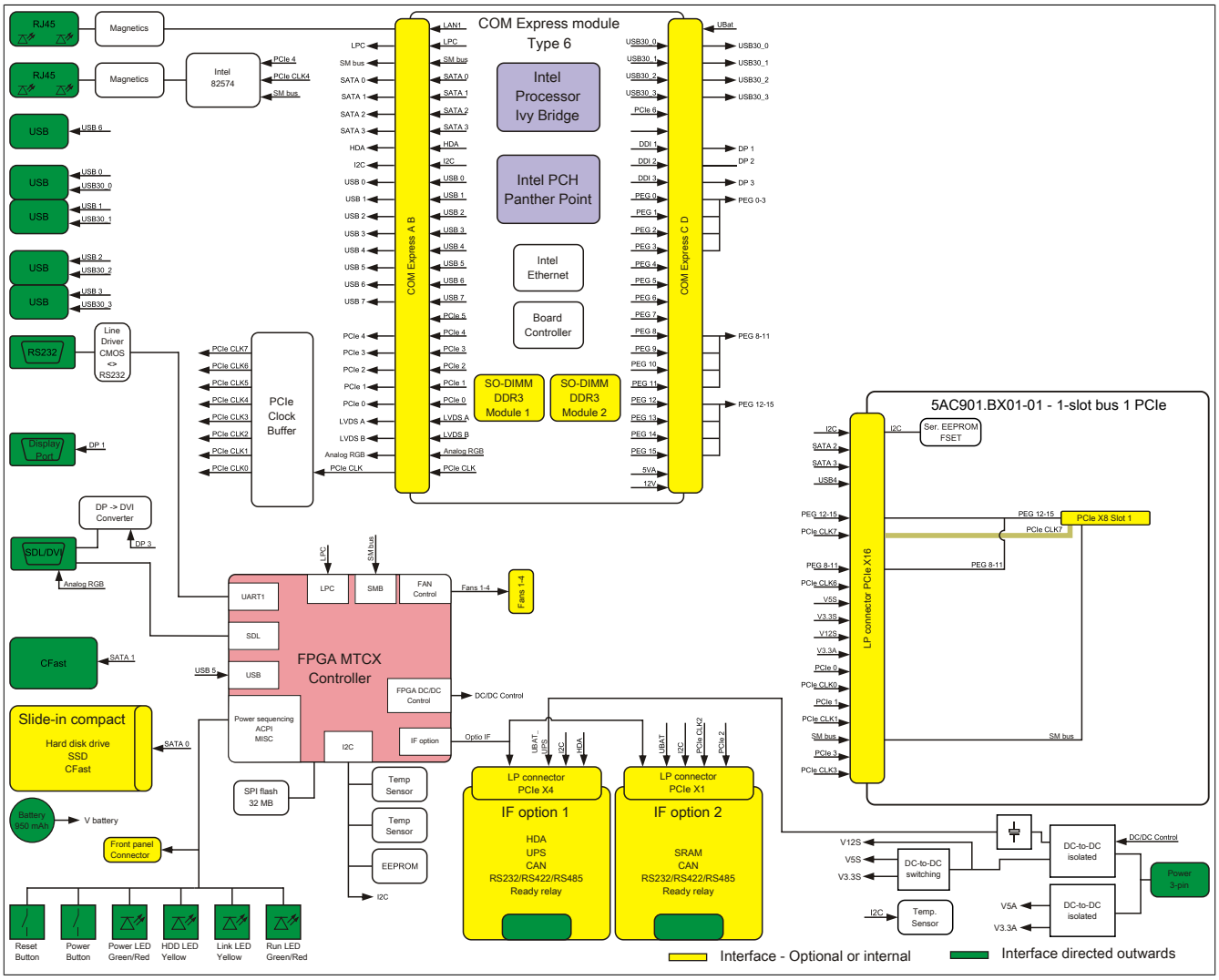

Figure 9: 5PC910.SX01-00 system unit + 5AC901.BX01-01 bus unit - Block diagram

2.5.3 5PC910.SX02-00 system unit + 5AC901.BX02-00 bus unit

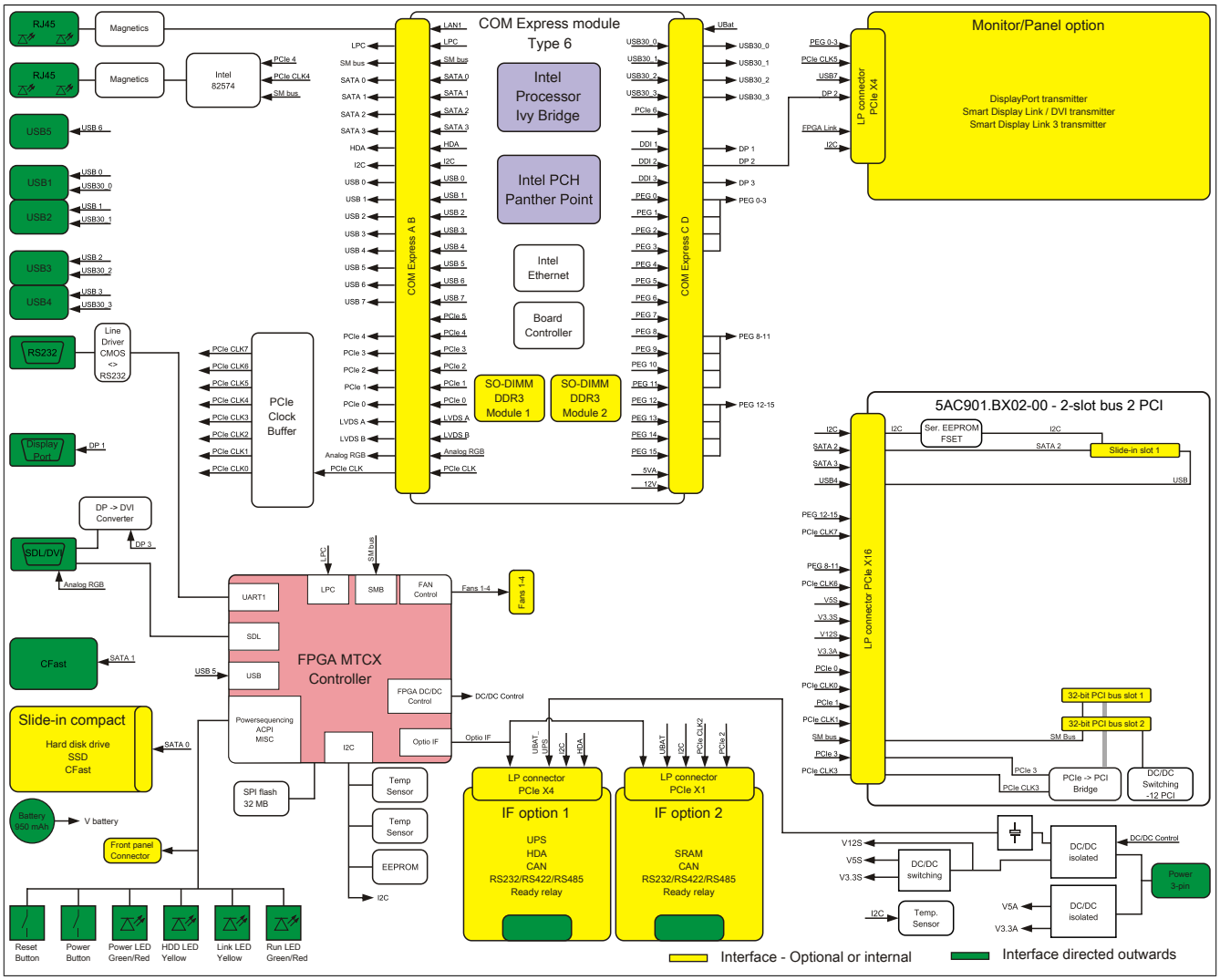

Figure 10: 5PC910.SX02-00 system unit + 5AC901.BX02-00 bus unit - Block diagram

2.5.4 5PC910.SX02-00 system unit + 5AC901.BX02-01 bus unit

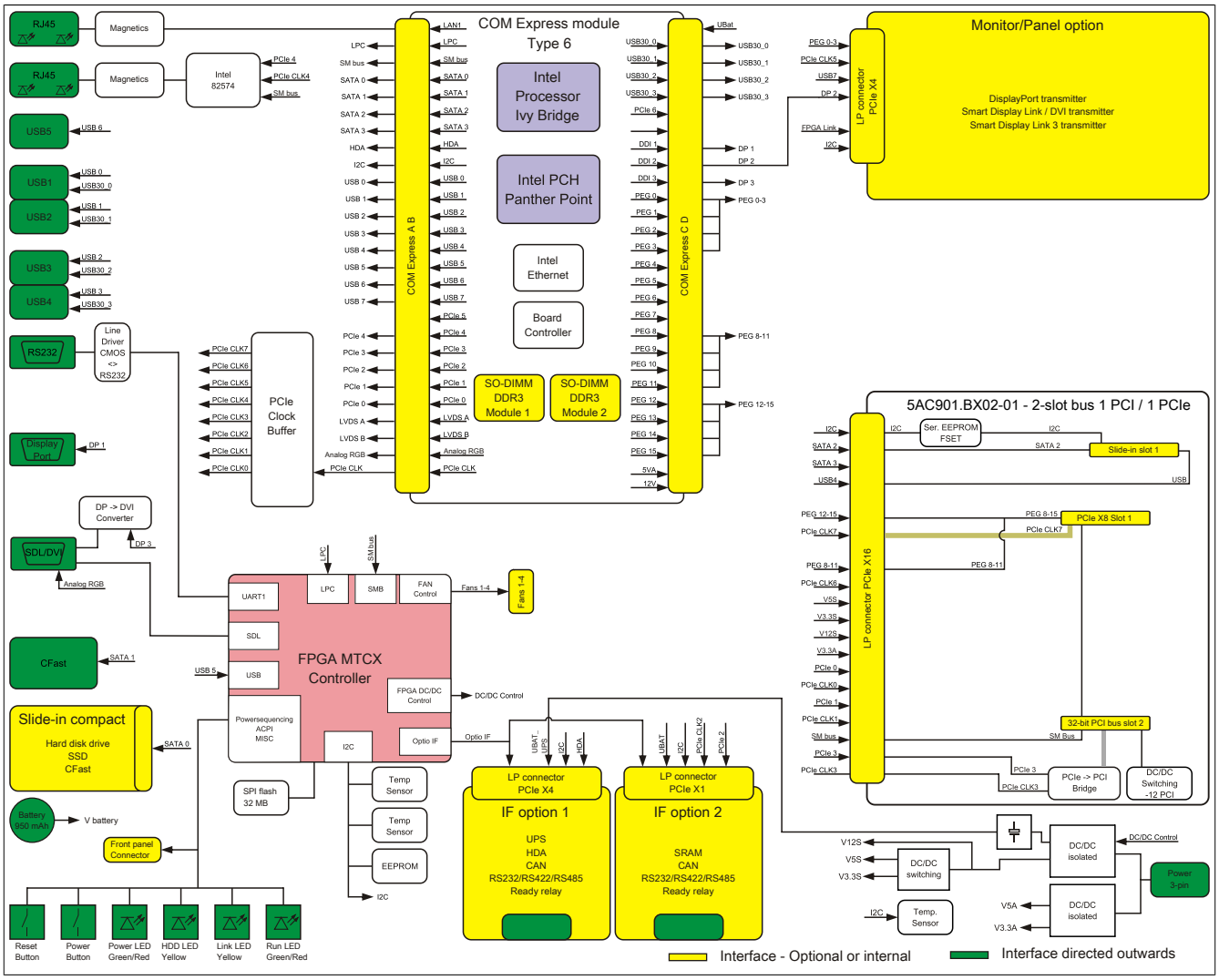

Figure 11: 5PC910.SX02-00 system unit + 5AC901.BX02-01 bus unit - Block diagram

2.5.5 5PC910.SX02-00 system unit + 5AC901.BX02-02 bus unit

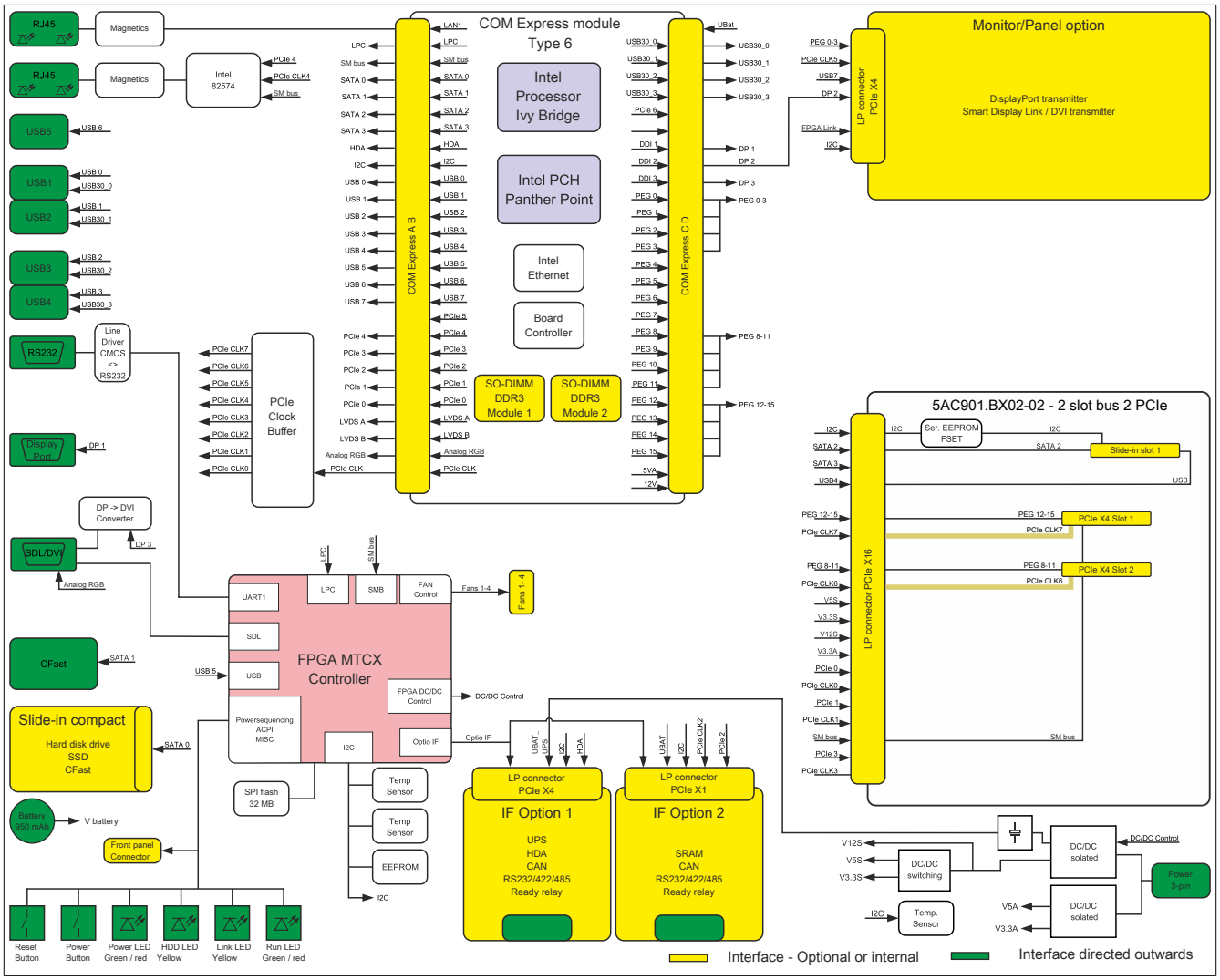

Figure 12: 5PC910.SX02-00 system unit + 5AC901.BX02-02 bus unit - Block diagram

2.5.6 5PC910.SX05-00 system unit + 5AC901.BX05-00 bus unit

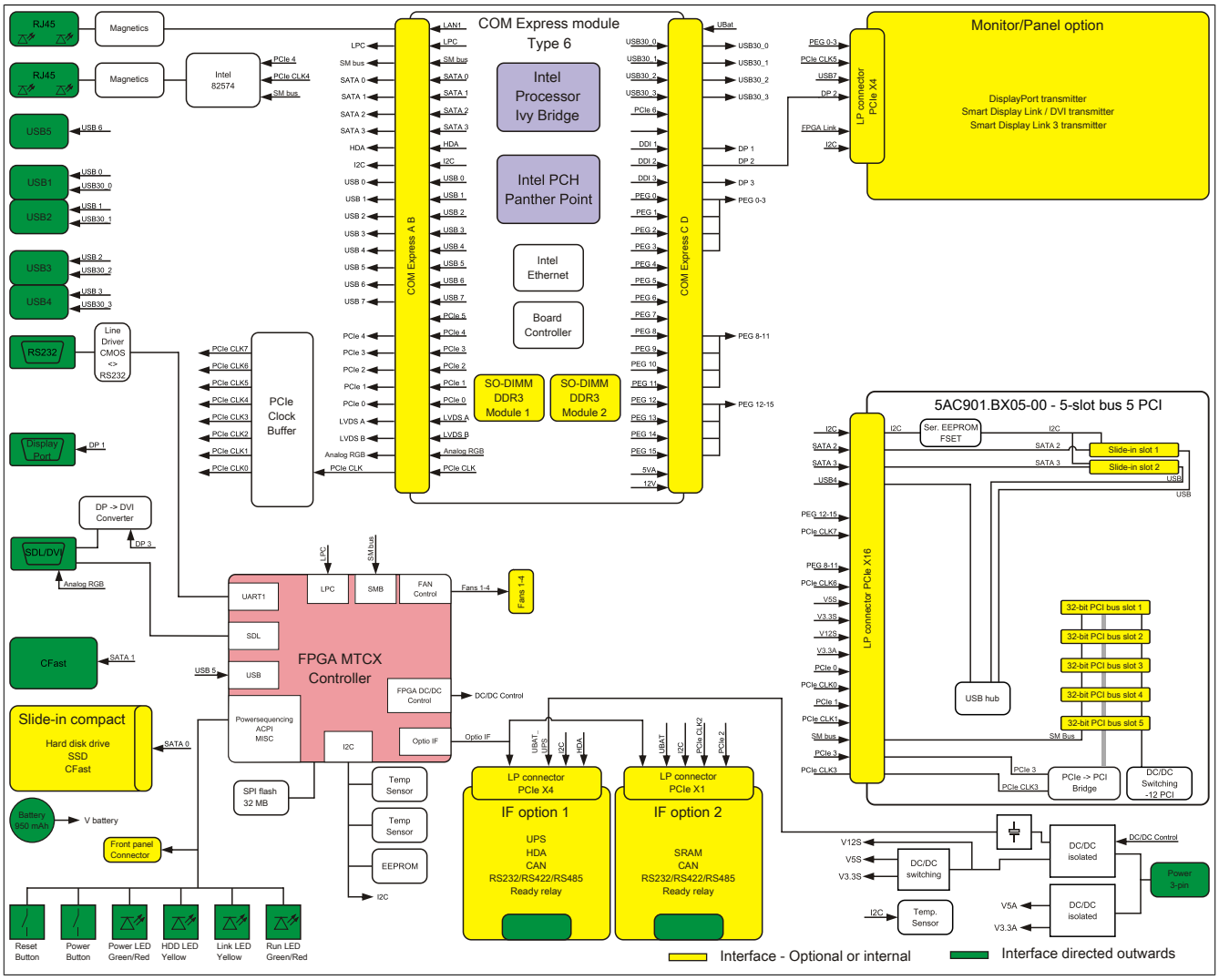

Figure 13: 5PC910.SX05-00 system unit + 5AC901.BX05-00 bus unit - Block diagram

2.5.7 5PC910.SX05-00 system unit + 5AC901.BX05-01 bus unit

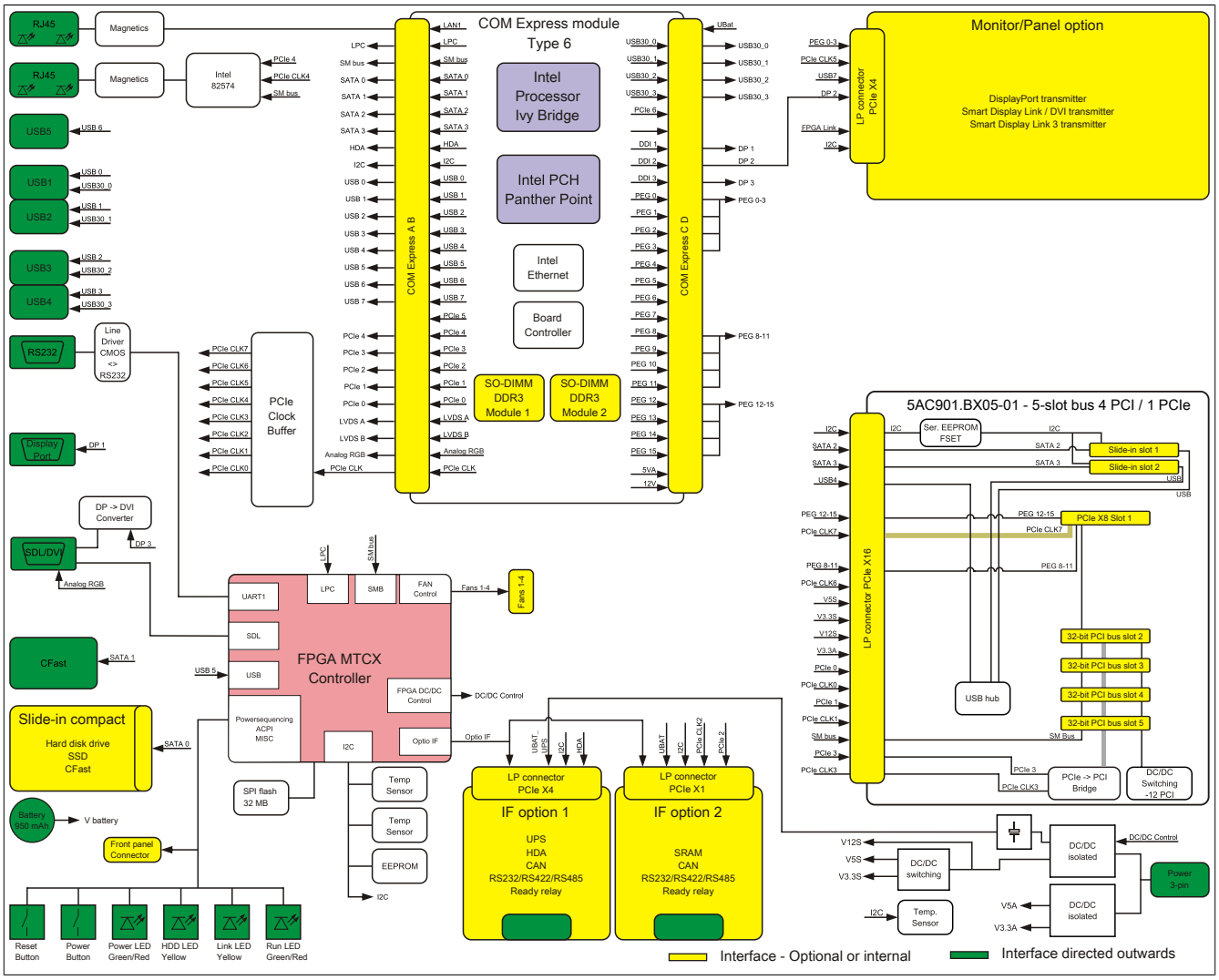

Figure 14: 5PC910.SX05-00 system unit + 5AC901.BX05-01 bus unit - Block diagram

2.5.8 5PC910.SX05-00 system unit + 5AC901.BX05-02 bus unit

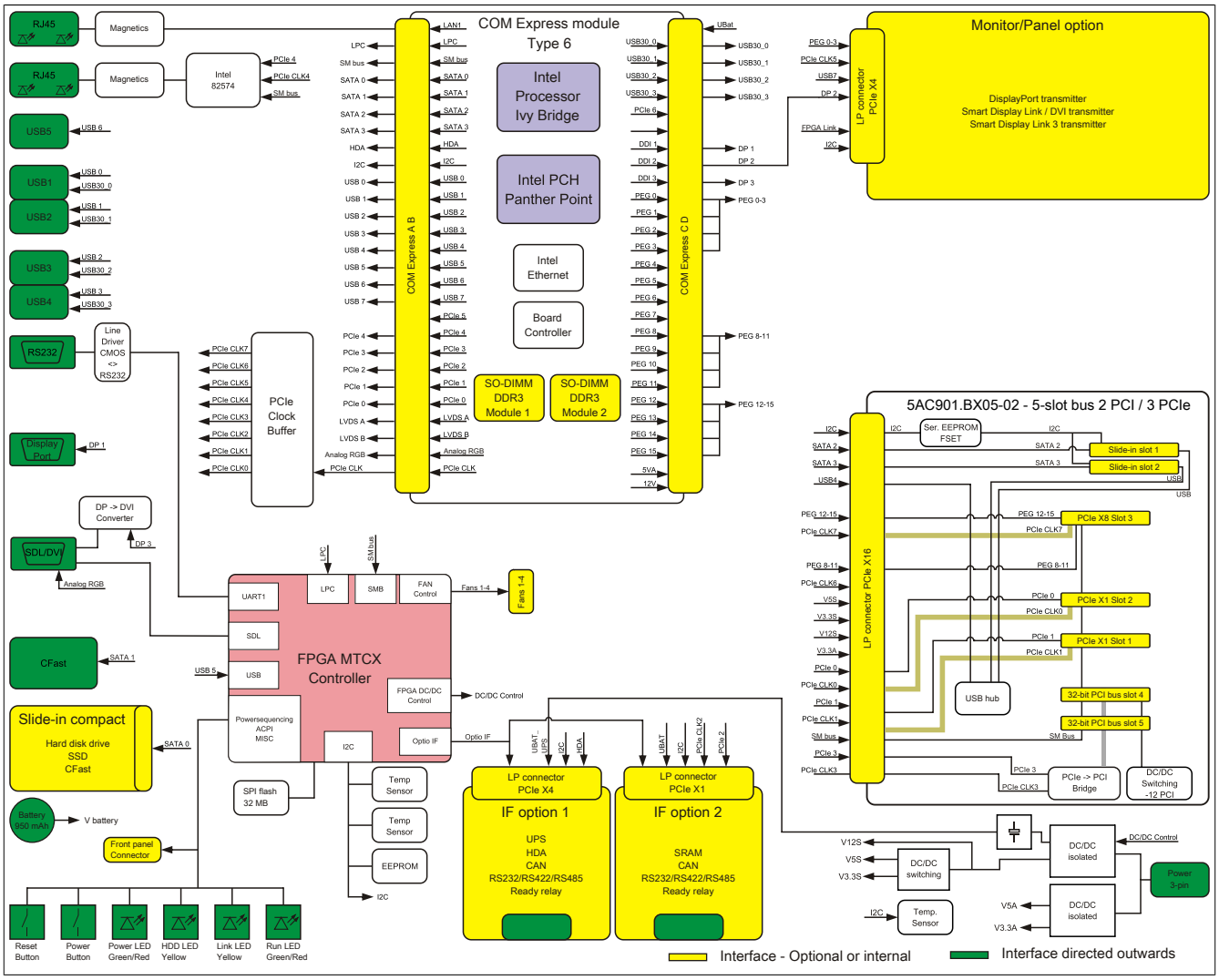

Figure 15: 5PC910.SX05-00 system unit + 5AC901.BX05-02 bus unit - Block diagram

2.5.9 5PC910.SX05-00 system unit + 5AC901.BX05-03 bus unit

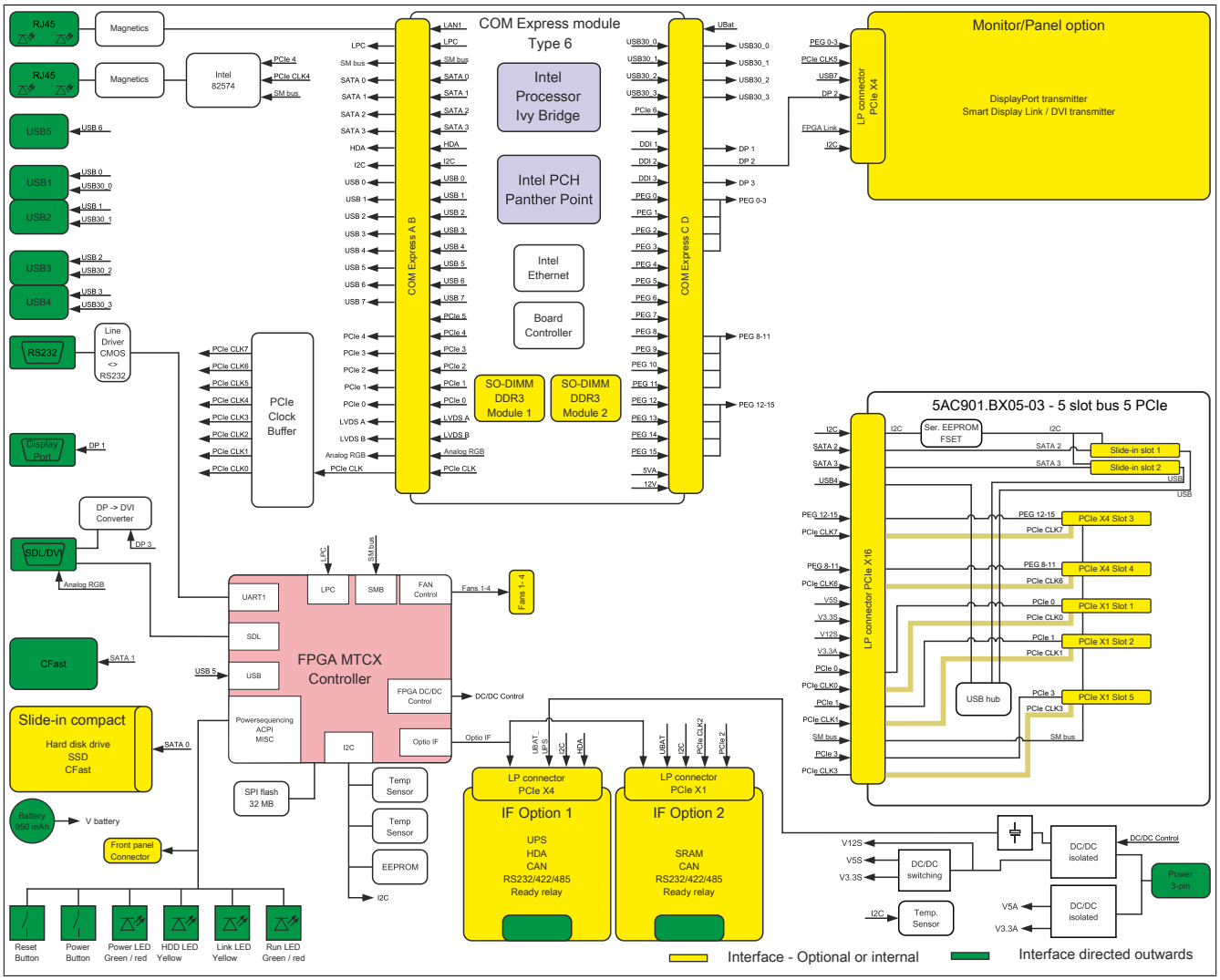

Figure 16: 5PC910.SX05-00 system unit + 5AC901.BX05-03 bus unit - Block diagram

2.5.10 Monitor/Panel options

DisplayPort transmitter

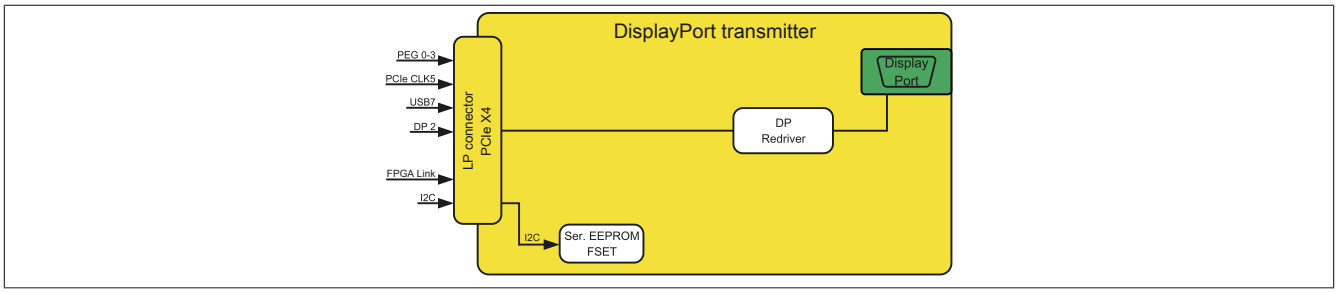

Figure 17: 5AC901.LDPO-00 DisplayPort transmitter - Block diagram

SDL/DVI transmitter

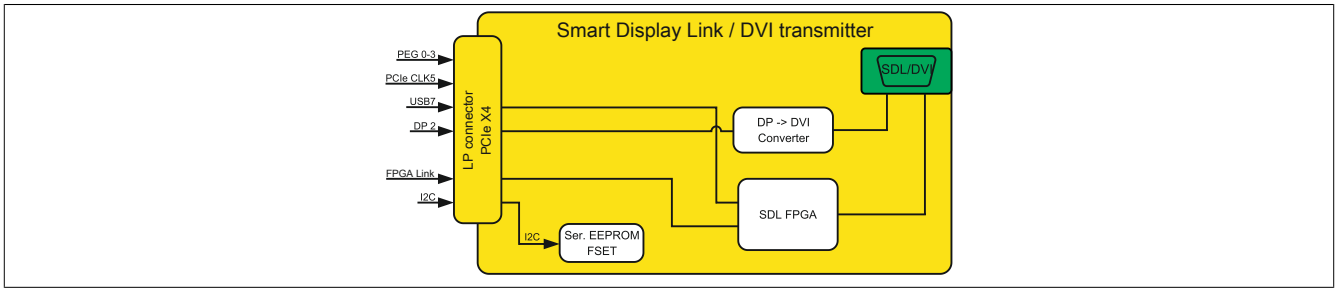

Figure 18: 5AC901.LSDL-00 Smart Display Link / DVI transmitter - Block diagram

SDL3 transmitter

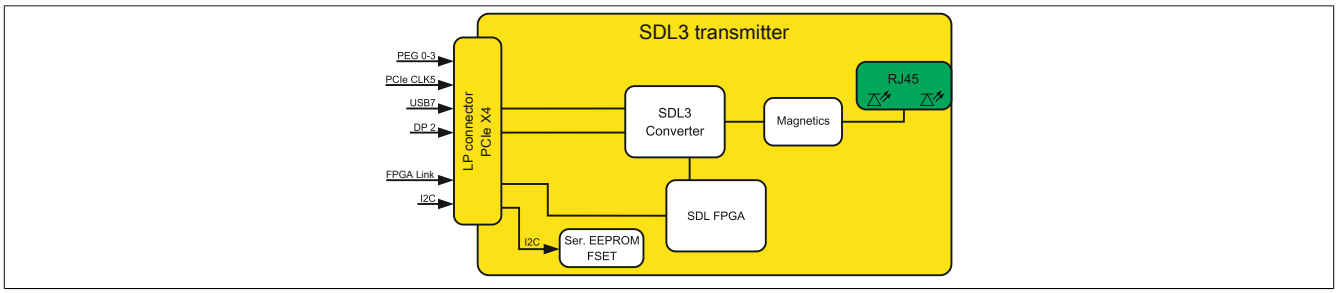

Figure 19: 5AC901.LSD3-00 Smart Display Link 3 transmitter - Block diagram

2.6 Device interfaces and slots

2.6.1 Device interfaces - Overview

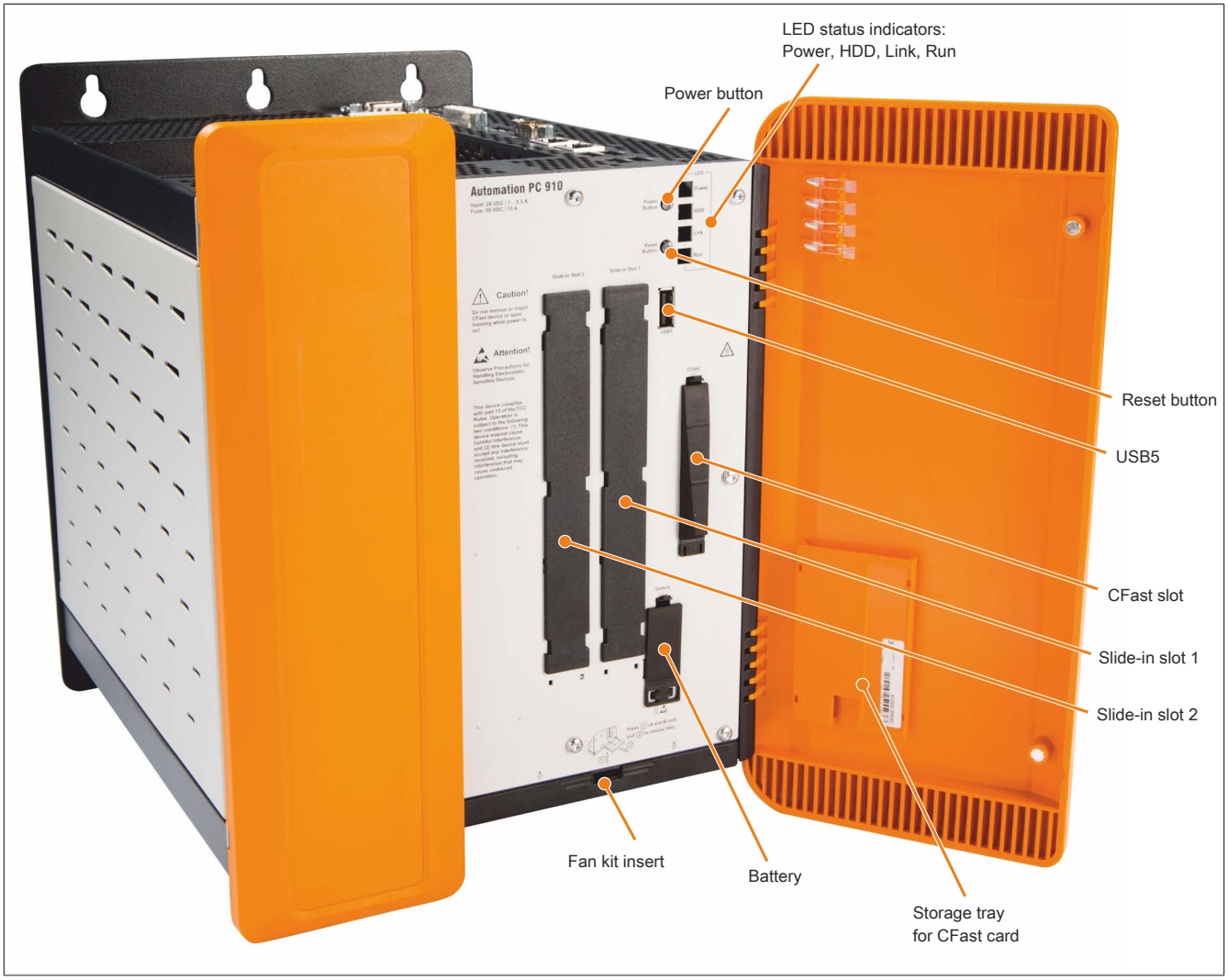

Figure 20: Device interfaces - Overview (front)

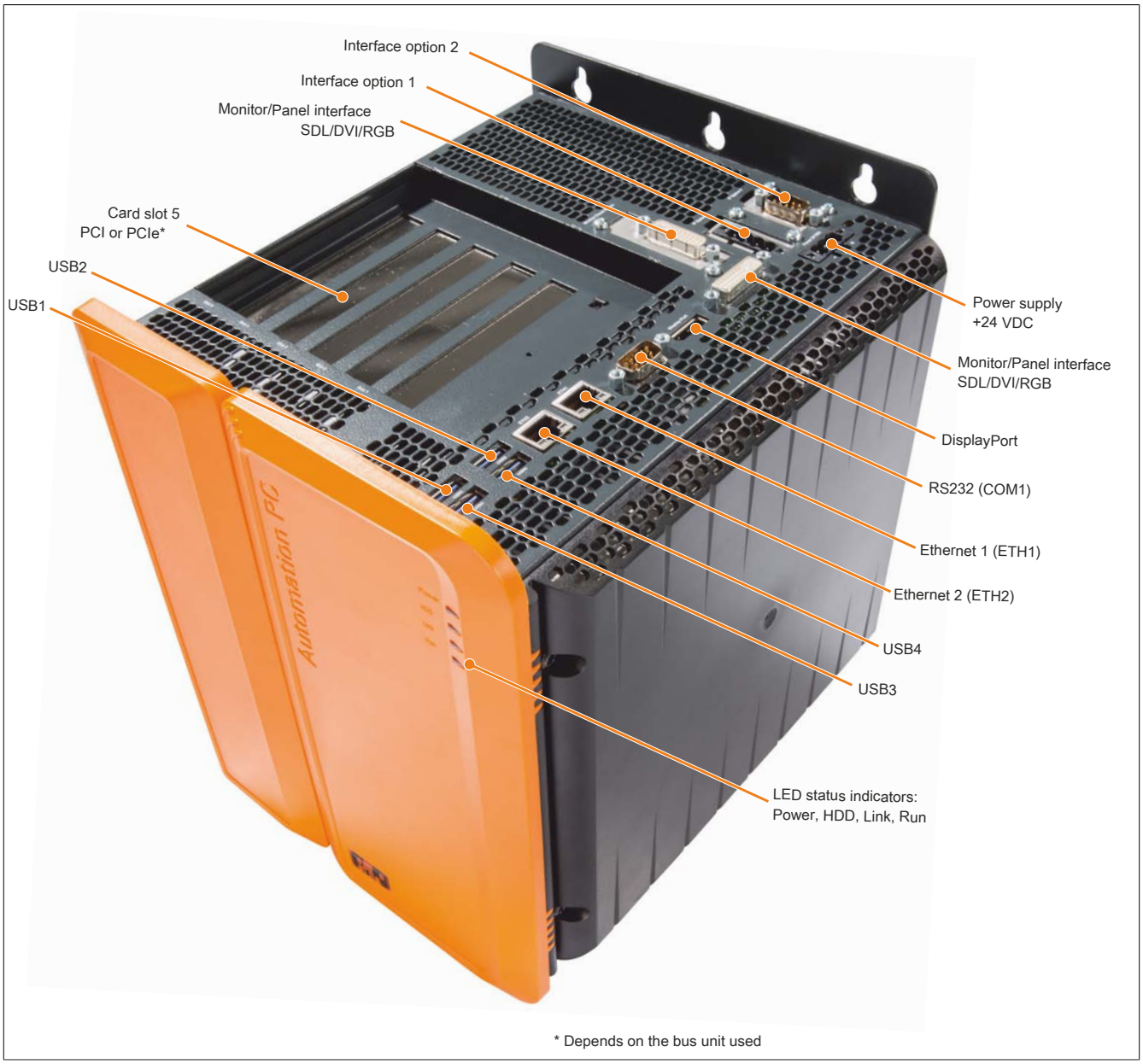

Figure 21: Device interfaces - Overview (top)

2.6.2 Power supply +24 VDC

Danger!

This device is only permitted to by supplied by a SELV / PELV power supply or with safety extra-low voltage (SELV) in accordance with EN 60950.

The 3-pin male connector required for the power supply interface is not included in delivery. It can be ordered from B&R using model number 0TB103.9 (screw clamps) or 0TB103.91 (cage clamp terminal block).

The pinout is listed in the following table and printed on the housing. The supply voltage is protected internally by a soldered fuse (15 A, fast-acting) to prevent damage to the device in the event of an overload (fuse replacement necessary) or if the voltage supply is connected incorrectly (reverse polarity protection -> fuse replacement not necessary). The device must be returned to B&R for repairs if the fuse is blown in the event of an error.

Power supply		
Protected against reverse polarity		3-pin male power supply connector Power supply +24 VDC 
Pin	**Description**	
1	+	
2	Functional ground	
3	-	
Model number	**Short description**	
	Terminal blocks	
0TB103.9	Male connector 24 V 5.08 3-pin screw clamps	
0TB103.91	Male connector 24 V 5.08 3-pin cage clamp terminal block	

Table 15: 24 VDC voltage supply connection

Electrical characteristics	
Nominal voltage	24 VDC ±25%, SELV[1)]
Nominal current	3 A
Overvoltage category in accordance with EN 61131-2	II
Inrush current	Typ. 6 A; max. 10 A for <300 µs
Electrical isolation	Yes
Uninterruptible power supply	No

1) EN 60950 requirements must be observed.

2.6.2.1 Grounding

Caution!

Functional ground (pin 2 of power supply and ground connection) must be kept as short as possible and connected to the largest possible wire cross section at the central grounding point (e.g. the control cabinet or system).

The ground connection is located on the bottom of the APC910 system.

Figure 22: Ground connection

The M4 self-locking nut must be used, for example, to fasten a copper strip to a central grounding point in the control cabinet or system where the APC910 is installed. The largest possible conductor cross section should be used (at least 2.5 mm²).

2.6.3 COM1 serial interface

COM1 serial interface[1]		
	RS232	
Type	RS232, modem-capable, not electrically isolated	
UART	16550-compatible, 16-byte FIFO	
Transfer rate	Max. 115 kbit/s	
Bus length	Max. 15 m	9-pin, male, DSUB connector
Pin	**Assignment**	
1	DCD	
2	RXD	
3	TXD	
4	DTR	
5	GND	
6	DSR	
7	RTS	
8	CTS	
9	RI	

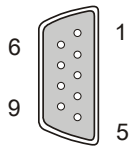

Table 16: COM1 - Pinout

1) The interfaces, etc. available on the device or module have been numbered as such for easy identification. This numbering may differ from that used by the particular operating system.

2.6.4 Panel/Monitor interface

Panel/Monitor interface - SDL (Smart Display Link) / DVI / RGB	
The following overview lists the video signals available on the monitor/panel output. For details, see the technical data for the CPU board being used.	
CPU board	**Video signals with all system unit variants**
5PC900.TS77-00	SDL, DVI, RGB
5PC900.TS77-01	SDL, DVI, RGB
5PC900.TS77-02	SDL, DVI, RGB
5PC900.TS77-03	SDL, DVI, RGB
5PC900.TS77-04	SDL, DVI, RGB
5PC900.TS77-05	SDL, DVI, RGB
5PC900.TS77-06	SDL, DVI, RGB
5PC900.TS77-07	SDL, DVI, RGB
5PC900.TS77-08	SDL, DVI, RGB
5PC900.TS77-09	SDL, DVI, RGB
5PC900.TS77-10	SDL, DVI, RGB

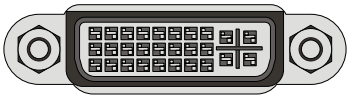

Table 17: Panel/Monitor interface - SDL, DVI, RGB

Information:

The hardware and graphics drivers of approved operating systems support the hot plugging of display devices to the panel/monitor interface for service purposes. The panel/monitor connector is specified for 100 connection cycles.

Information:

If a display device with touch screen is connected to the panel/monitor interface and then disconnected again during operation (hot plugging), it may be necessary to recalibrate the touch screen.

Information:

The RGB interface uses an analog signal; the line length depends on the resolution and prevailing environmental conditions. This interface is therefore only recommended for service purposes.

2.6.4.1 USB communication in SDL and DVI mode

Information:

The USB transfer rate is limited to USB 1.1 in SDL mode.

In DVI mode, the maximum USB transfer rate is determined by the USB interface and USB hub on the display device.

2.6.4.2 Pinout

Pin	Assignment	Description	Pin	Assignment	Description
1	TMDS data 2-	DVI lane 2 (negative)	16	HPD	Hot plug detect
2	TMDS data 2+	DVI lane 2 (positive)	17	TMDS data 0-	DVI lane 0 (negative)
3	TMDS data 2/4 SHIELD	Shield for data pair 2 and 4	18	TMDS data 0+	DVI lane 0 (positive)
4	SDL-	SDL lane (negative)	19	TMDS Data 0/ XUSB1 SHIELD	Shield for data pair 0 and USB1
5	SDL+	SDL lane (positive)	20	XUSB1-	USB lane 1 (negative)
6	DDC clock	DDC-based control signal (clock)	21	XUSB1+	USB lane 1 (positive)
7	DDC data	DDC-based control signal (data)	22	TMDS clock shield	Shield for clock pair
8	ANALOG VERT SYNC	Analog vertical synchronization	23	TMDS clock+	DVI clock (positive)
9	TMDS data 1-	DVI lane 1 (negative)	24	TMDS clock -	DVI clock (negative)
10	TMDS DATA 1+	DVI lane 1 (negative) HDMI clock (positive)	C1	ANALOG RED	Analog red
11	TMDS DATA 1/ XUSB0 SHIELD	Shield for data pair 1 and USB0	C2	ANALOG GREEN	Analog green

DVI, 24-pin, female

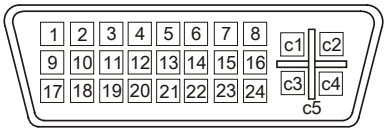

Table 18: DVI interface - Pinout

Pin	Assignment	Description	Pin	Assignment	Description
12	XUSB0-	USB lane 0 (negative)	C3	ANALOG BLUE	Analog blue
13	XUSB0+	USB lane 0 (positive)	C4	ANALOG HORZ SYNC	Analog horizontal synchro-nization
14	+5 V power[1)]	+5 V power supply	C5	ANALOG GND	Analog ground (return for R, G and B signals)
15	Ground (return for +5 V, HSync and VSync)	Ground			

Table 18: DVI interface - Pinout

1) Protected internally by a multifuse.

2.6.4.3 Cable lengths and resolutions for SDL transmission

The following table lists the relationship between segment lengths and maximum resolution depending on the SDL cable being used:

SDL cable	Resolution						
Segment length [m]	VGA 640 x 480	SVGA 800 x 600	XGA 1024 x 768	HD 1366 x 768	SXGA 1280 x 1024	UXGA 1600 x 1200	FHD 1920 x 1080
0.8	5CASDL.0008-00	5CASDL.0008-00	5CASDL.0008-00	5CASDL.0008-00	5CASDL.0008-00	5CASDL.0008-00	5CASDL.0008-00
1.8	5CASDL.0018-00 5CASDL.0018-01 5CASDL.0018-03	5CASDL.0018-00 5CASDL.0018-01 5CASDL.0018-03	5CASDL.0018-00 5CASDL.0018-01 5CASDL.0018-03	5CASDL.0018-00 5CASDL.0018-01 5CASDL.0018-03	5CASDL.0018-00 5CASDL.0018-01 5CASDL.0018-03	5CASDL.0018-01 5CASDL.0018-01 5CASDL.0018-03	5CASDL.0018-00 5CASDL.0018-01 5CASDL.0018-03
5	5CASDL.0050-00 5CASDL.0050-01 5CASDL.0050-03	5CASDL.0050-00 5CASDL.0050-01 5CASDL.0050-03	5CASDL.0050-00 5CASDL.0050-01 5CASDL.0050-03	5CASDL.0050-00 5CASDL.0050-01 5CASDL.0050-03	5CASDL.0050-00 5CASDL.0050-01 5CASDL.0050-03	5CASDL.0050-00 5CASDL.0050-01 5CASDL.0050-03	5CASDL.0050-00 5CASDL.0050-01 5CASDL.0050-03
10	5CASDL.0100-00 5CASDL.0100-01 5CASDL.0100-03	5CASDL.0100-00 5CASDL.0100-01 5CASDL.0100-03	5CASDL.0100-00 5CASDL.0100-01 5CASDL.0100-03	5CASDL.0100-00 5CASDL.0100-01 5CASDL.0100-03	5CASDL.0100-00 5CASDL.0100-01 5CASDL.0100-03	5CASDL.0100-00 5CASDL.0100-01 5CASDL.0100-03	5CASDL.0100-00 5CASDL.0100-01 5CASDL.0100-03
15	5CASDL.0150-00 5CASDL.0150-01 5CASDL.0150-03	5CASDL.0150-00 5CASDL.0150-01 5CASDL.0150-03	5CASDL.0150-00 5CASDL.0150-01 5CASDL.0150-03	5CASDL.0150-00 5CASDL.0150-01 5CASDL.0150-03	5CASDL.0150-00 5CASDL.0150-01 5CASDL.0150-03	- - -	- - 5CASDL.0150-03
20	5CASDL.0200-00 5CASDL.0200-03	5CASDL.0200-00 5CASDL.0200-03	5CASDL.0200-00 5CASDL.0200-03	5CASDL.0200-00 5CASDL.0200-03	5CASDL.0200-00 5CASDL.0200-03	- -	- 5CASDL.0200-03
25	5CASDL.0250-00 5CASDL.0250-03	5CASDL.0250-00 5CASDL.0250-03	5CASDL.0250-00 5CASDL.0250-03	5CASDL.0250-00 5CASDL.0250-03	- -	- -	- -
30	5CASDL.0300-00 5CASDL.0300-03	5CASDL.0300-00 5CASDL.0300-03	- 5CASDL.0300-13	- 5CASDL.0300-13	- 5CASDL.0300-13	- -	- 5CASDL.0300-13
40	5CASDL.0400-13	5CASDL.0400-13	5CASDL.0400-13	5CASDL.0400-13	5CASDL.0400-13	-	5CASDL.0400-13

Table 19: Cable lengths and resolutions for SDL transmission

The following table lists the relationship between segment lengths and maximum resolution depending on the SDL cable being used:

SDL cable	Resolution						
Segment length [m]	VGA 640 x 480	SVGA 800 x 600	XGA 1024 x 768	HD 1366 x 768	SXGA 1280 x 1024	UXGA 1600 x 1200	FHD 1920 x 1080
0.8	5CASDL.0008-00	5CASDL.0008-00	5CASDL.0008-00	5CASDL.0008-00	5CASDL.0008-00	5CASDL.0008-00	5CASDL.0008-00
1.8	5CASDL.0018-00 5CASDL.0018-01 5CASDL.0018-03	5CASDL.0018-00 5CASDL.0018-01 5CASDL.0018-03	5CASDL.0018-00 5CASDL.0018-01 5CASDL.0018-03	5CASDL.0018-00 5CASDL.0018-01 5CASDL.0018-03	5CASDL.0018-00 5CASDL.0018-01 5CASDL.0018-03	5CASDL.0018-00 5CASDL.0018-01 5CASDL.0018-03	5CASDL.0018-00 5CASDL.0018-01 5CASDL.0018-03
5	5CASDL.0050-00 5CASDL.0050-01 5CASDL.0050-03	5CASDL.0050-00 5CASDL.0050-01 5CASDL.0050-03	5CASDL.0050-00 5CASDL.0050-01 5CASDL.0050-03	5CASDL.0050-00 5CASDL.0050-01 5CASDL.0050-03	5CASDL.0050-00 5CASDL.0050-01 5CASDL.0050-03	5CASDL.0050-00 5CASDL.0050-01 5CASDL.0050-03	5CASDL.0050-00 5CASDL.0050-01 5CASDL.0050-03
10	5CASDL.0100-00 5CASDL.0100-01 5CASDL.0100-03	5CASDL.0100-00 5CASDL.0100-01 5CASDL.0100-03	5CASDL.0100-00 5CASDL.0100-01 5CASDL.0100-03	5CASDL.0100-00 5CASDL.0100-01 5CASDL.0100-03	5CASDL.0100-00 5CASDL.0100-01 5CASDL.0100-03	5CASDL.0100-00 5CASDL.0100-01 5CASDL.0100-03	5CASDL.0100-00 5CASDL.0100-01 5CASDL.0100-03
15	5CASDL.0150-00 5CASDL.0150-01 5CASDL.0150-03	5CASDL.0150-00 5CASDL.0150-01 5CASDL.0150-03	5CASDL.0150-00 5CASDL.0150-01 5CASDL.0150-03	5CASDL.0150-00 5CASDL.0150-01 5CASDL.0150-03	5CASDL.0150-00 5CASDL.0150-01 5CASDL.0150-03	- - -	- - 5CASDL.0150-03
20	5CASDL.0200-00 5CASDL.0200-03	5CASDL.0200-00 5CASDL.0200-03	5CASDL.0200-00 5CASDL.0200-03	5CASDL.0200-00 5CASDL.0200-03	5CASDL.0200-00 5CASDL.0200-03	- -	- 5CASDL.0200-03
25	5CASDL.0250-00 5CASDL.0250-03	5CASDL.0250-00 5CASDL.0250-03	5CASDL.0250-00 5CASDL.0250-03	5CASDL.0250-00 5CASDL.0250-03	- -	- -	- -
30	5CASDL.0300-00 5CASDL.0300-03	5CASDL.0300-00 5CASDL.0300-03	- -	- -	- -	- -	- -

Table 20: Cable lengths and resolutions for SDL transmission

5CASDL.0xxx-01 SDL cables are routed through the swing arm shaft with the straight connector; the 45° connector is used on the industrial PC side.

2.6.4.4 Cable lengths and resolutions for DVI transmission

The following table lists the relationship between segment lengths and maximum resolution depending on the DVI cable being used:

DVI cable	Resolution						
Segment length [m]	VGA 640 x 480	SVGA 800 x 600	XGA 1024 x 768	HD 1366 x 768	SXGA 1280 x 1024	UXGA 1600 x 1200	FHD 1920 x 1080
1.8	5CADVI.0018-00	5CADVI.0018-00	5CADVI.0018-00	5CADVI.0018-00	5CADVI.0018-00	5CADVI.0018-00	5CADVI.0018-00
5	5CADVI.0050-00	5CADVI.0050-00	5CADVI.0050-00	5CADVI.0050-00	5CADVI.0050-00	5CADVI.0050-00	5CADVI.0050-00

Table 21: Cable lengths and resolutions for DVI transmission

The maximum cable length for DVI transfer is limited to 5 m due to the USB specification.

2.6.5 DisplayPort interface

DisplayPort 1.1	
The following overview lists the video signals available on the DisplayPort 1.1 output. For details, see the technical data for the CPU board being used.	
CPU board	**Video signals with all system unit variants**
5PC900.TS77-00	DisplayPort, DVI, HDMI
5PC900.TS77-01	DisplayPort, DVI, HDMI
5PC900.TS77-02	DisplayPort, DVI, HDMI
5PC900.TS77-03	DisplayPort, DVI, HDMI
5PC900.TS77-04	DisplayPort, DVI, HDMI
5PC900.TS77-05	DisplayPort, DVI, HDMI
5PC900.TS77-06	DisplayPort, DVI, HDMI
5PC900.TS77-07	DisplayPort, DVI, HDMI
5PC900.TS77-08	DisplayPort, DVI, HDMI
5PC900.TS77-09	DisplayPort, DVI, HDMI
5PC900.TS77-10	DisplayPort, DVI, HDMI

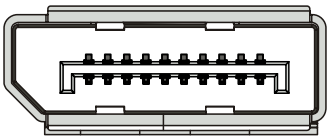

Table 22: DisplayPort 1.1

Information:

The hardware and graphics drivers of approved operating systems support the hot plugging of display devices to the DisplayPort interface for service purposes. The DisplayPort connector is specified for 10,000 connection cycles.

2.6.5.1 DisplayPort - Pinout

Pin	Signal	Description	Pin	Signal	Description
1	DP_LANE0+	DisplayPort lane 0 (positive)	11	GND	Ground
2	GND	Ground	12	DP_LANE3-	DisplayPort lane 3 (negative)
3	DP_LANE0-	DisplayPort lane 0 (negative)	13	CONFIG1	Configuration pin 1 (connected to ground)
4	DP_LANE1+	DisplayPort lane 1 (positive)	14	CONFIG2	Configuration pin 2 (connected to ground)
5	GND	Ground	15	DP_AUX+	Auxiliary channel (positive)
6	DP_LANE1-	DisplayPort lane 1 (negative)	16	GND	Ground
7	DP_LANE2+	DisplayPort lane 2 (positive)	17	DP_AUX-	Auxiliary channel (negative)
8	GND	Ground	18	DP_HPD#	Hot plug detect
9	DP_LANE2-	DisplayPort lane 2 (negative)	19	RETURN	Return for power
10	DP_LANE3+	DisplayPort lane 3 (positive)	20	DP_PWR	Power for connector

DisplayPort, 20-pin, female

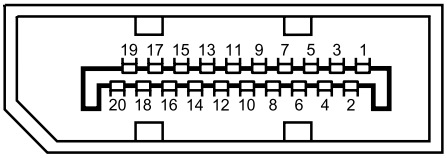

Table 23: DisplayPort - Pinout

2.6.6 Ethernet 1 interface (ETH1)

This Ethernet controller is integrated in the CPU board and connected to external devices via the system unit.

Ethernet 1 interface (ETH1[1])			
Controller	Intel® 82579		RJ45, female
Cabling	S/STP (Cat 5e)		
Transfer rate	10/100/1000 Mbit/s[2]		
Cable length	Max. 100 m (min. Cat5e)		
Speed LED	**On**	**Off**	
Green	100 Mbit/s	10 Mbit/s[3]	
Orange	1000 Mbit/s	-	
Link LED	**On**	**Off**	
Orange	Link (Ethernet network connection available)	Activity (blinking - data transfer in progress)	

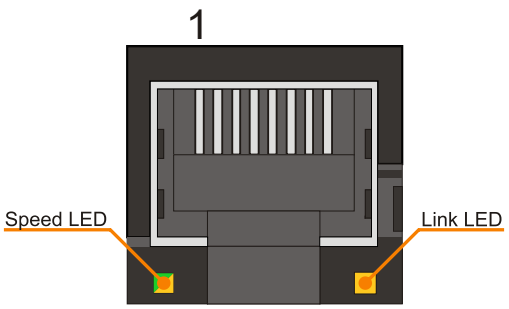

Table 24: Ethernet interface (ETH1)

1) The interfaces, etc. available on the device or module have been numbered as such for easy identification. This numbering may differ from that used by the particular operating system.
2) Switching takes place automatically.
3) The 10 Mbit/s transfer speed / connection only exists if the Link LED is also lit at the same time.

Driver support

A special driver is required to operate the Ethernet controller. Drivers for approved operating systems are available in the Downloads section of the B&R website (www.br-automation.com).

> **Information:**
>
> **Required drivers must be downloaded from the B&R website only, not from manufacturer websites.**

2.6.7 Ethernet 2 interface (ETH2)

This Ethernet controller is integrated in the mainboard and connected to external devices via the system unit.

Ethernet 2 interface (ETH2[1])			
Controller	Intel® 82574L		RJ45, female
Cabling	S/STP (Cat 5e)		
Transfer rate	10/100/1000 Mbit/s[2]		
Cable length	Max. 100 m (min. Cat5e)		
Speed LED	**On**	**Off**	
Green	100 Mbit/s	10 Mbit/s[3]	
Orange	1000 Mbit/s	-	
Link LED	**On**	**Off**	
Orange	Link (Ethernet network connection available)	Activity (blinking - data transfer in progress)	

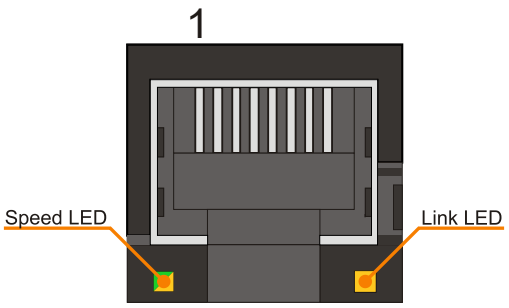

Table 25: Ethernet interface (ETH2)

1) The interfaces, etc. available on the device or module have been numbered as such for easy identification. This numbering may differ from that used by the particular operating system.
2) Switching takes place automatically.
3) The 10 Mbit/s transfer speed / connection only exists if the Link LED is also lit at the same time.

Driver support

A special driver is required to operate the Ethernet controller. Drivers for approved operating systems are available in the Downloads section of the B&R website (www.br-automation.com).

> **Information:**
>
> **Required drivers must be downloaded from the B&R website only, not from manufacturer websites.**

2.6.8 USB interfaces

The APC910 comes equipped with a USB 3.0 (Universal Serial Bus) host controller with multiple USB interfaces, 5 of which are accessible externally for the user. The 4 USB interfaces (USB1-4) on the top are USB 3.0 ports. The USB interface on the front (USB5) is a USB 2.0 interface.

Warning!

Peripheral USB devices can be connected to the USB interfaces on this device. Due to the large number of USB devices available on the market, B&R cannot guarantee their performance. All USB devices provided by B&R are guaranteed to function properly.

Caution!

Because this interface is designed according to general PC specifications, extreme care should be exercised with regard to EMC, cable routing, etc.

USB1, USB2, USB3, USB4

4 USB 3.0 interfaces are provided on the top of the APC910.

Universal Serial Bus (USB1, USB2, USB3, USB4)[1]		
Type	USB 2.0 / 3.0	4x USB type A, female 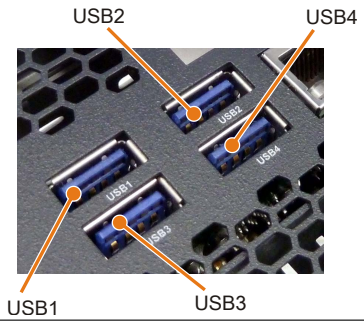
Design	Type A	
Transfer rate	Low speed (1.5 Mbit/s), full speed (12 Mbit/s), high speed (480 Mbit/s), SuperSpeed (5 Gbit/s)	
Current load[2] USB1, USB2 USB3, USB4	 Max. 1 A Max. 1 A	
Cable length USB 2.0 USB 3.0	 Max. 5 m (without hub) Max. 3 m (without hub)	

Table 26: USB1, USB2, USB3, USB4 interface

1) The interfaces, etc. available on the device or module have been numbered as such for easy identification. This numbering may differ from that used by the particular operating system.
2) Each USB interface is protected by a maintenance-free "USB current-limiting circuit breaker" (max. 1 A).

USB5

A USB 2.0 interface is provided on the APC910 behind the front cover.

Universal Serial Bus (USB5)[1]		
Type	USB 2.0	1x USB type A, female 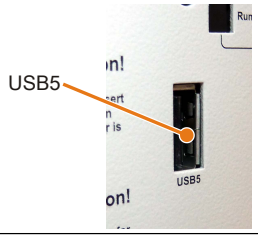
Design	Type A	
Transfer rate	Low speed (1.5 Mbit/s), full speed (12 Mbit/s), high speed (480 Mbit/s)	
Current load[2] USB5	 Max. 1 A	
Cable length	Max. 5 m (without hub)	

Table 27: USB5 interface

1) The interfaces, etc. available on the device or module have been numbered as such for easy identification. This numbering may differ from that used by the particular operating system.
2) The USB interface is protected by a maintenance-free "USB current-limiting circuit breaker" (max. 1 A).

2.6.9 IF option 1 slot

Automation PC 910 system units include 2 slots for interface options.

The following table lists the interface options that can be used in the IF option 1 slot.

IF option 1 slot	
Model number	**Short description**
	Interface option
5AC901.I485-00[1)]	Interface card - 1x RS232/422/458 interface - For APC910/PPC900
5AC901.ICAN-00[1)2)]	Interface card - 1x CAN interface - For APC910/PPC900
5AC901.IHDA-00	Interface card - 1x audio interface (1x MIC/1x Line In/1x OUT) - For APC910/PPC900
5AC901.IRDY-00	Interface card - Ready relay - For APC910/PPC900
5AC901.IUPS-00[3)]	UPS - For 4.5 Ah battery
5AC901.IUPS-01[4)]	UPS - For 2.2 Ah battery
5AC901.ISIO-00	Interface card - System I/O - For APC910/PPC900

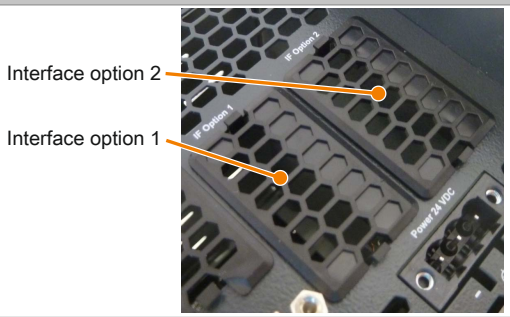

Table 28: IF option 1 slot

1) If IF options 5AC901.I485-00 and 5AC901.ICAN-00 are used simultaneously, the 5AC901.ICAN-00 should be installed in the IF option 1 slot and the 5AC901.I485-00 should be installed in the IF option 2 slot.
2) It is not possible to operate two 5AC901.ICAN interface options (in the IF option 1 and IF option 2 slots) at the same time.
3) The 5AC901.IUPS-00 UPS IF option is only permitted to be operated with the 5AC901.BUPS-00 battery unit!
4) The 5AC901.IUPS-01 UPS IF option is only permitted to be operated with the 5AC901.BUPS-01 battery unit!

Information:

For information about installing or replacing an interface option, please refer to section "Installing interface options" on page 379.

2.6.10 IF option 2 slot

Automation PC 910 system units include 2 slots for interface options.

The following table lists the interface options that can be used in the IF option 2 slot.

IF option 2 slot	
Model number	**Short description**
	Interface option
5AC901.I485-00[1)]	Interface card - 1x RS232/422/458 interface - For APC910/PPC900
5AC901.ICAN-00[1)2)]	Interface card - 1x CAN interface - For APC910/PPC900
5AC901.IETH-00	Interface card - Ethernet 10/100/1000 - For APC910/PPC900
5AC901.IPLK-00	Interface card - 1x POWERLINK interface - 2 MB SRAM - For APC910/PPC900
5AC901.ISRM-00	Interface cards - 2 MB SRAM - For APC910/PPC900
5AC901.IRDY-00	Interface card - Ready relay - For APC910/PPC900
5AC901.ISIO-00	Interface card - System I/O - For APC910/PPC900

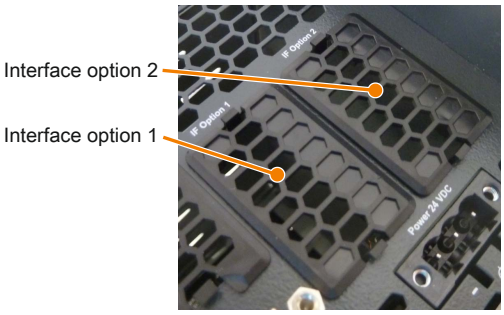

Table 29: IF option 2 slot

1) If IF options 5AC901.I485-00 and 5AC901.ICAN-00 are used simultaneously, the 5AC901.ICAN-00 should be installed in the IF option 1 slot and the 5AC901.I485-00 should be installed in the IF option 2 slot.
2) It is not possible to operate two 5AC901.ICAN interface options (in the IF option 1 and IF option 2 slots) at the same time.

Information:

For information about installing or replacing an interface option, please refer to section "Installing interface options" on page 379.

2.6.11 Monitor/Panel option

2-slot (5PC910.SX02-00) and 5-slot (5PC910.SX05-00) APC910 variants allow a third graphics line to be set up. There are a variety of monitor/panel options available for this.

Monitor/Panel option	
Model number	**Short description**
	Monitor/Panel options
5AC901.LDPO-00	DisplayPort transmitter
5AC901.LSDL-00	Smart Display Link / DVI transmitter
5AC901.LSD3-00	SDL3 transmitter

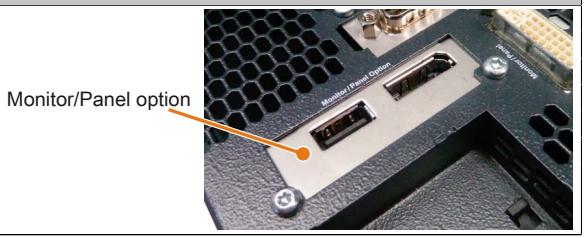

Table 30: Monitor/Panel option

Information:

For information about installing or replacing a monitor/panel option, please refer to the section "Installing monitor/panel options" on page 382.

2.6.12 Card slot (PCI/PCIe)

Standard PCI 2.2 half-size cards or PCI Express (PCIe) half-size cards can be installed depending on the type of bus unit. They must not exceed the following dimensions.

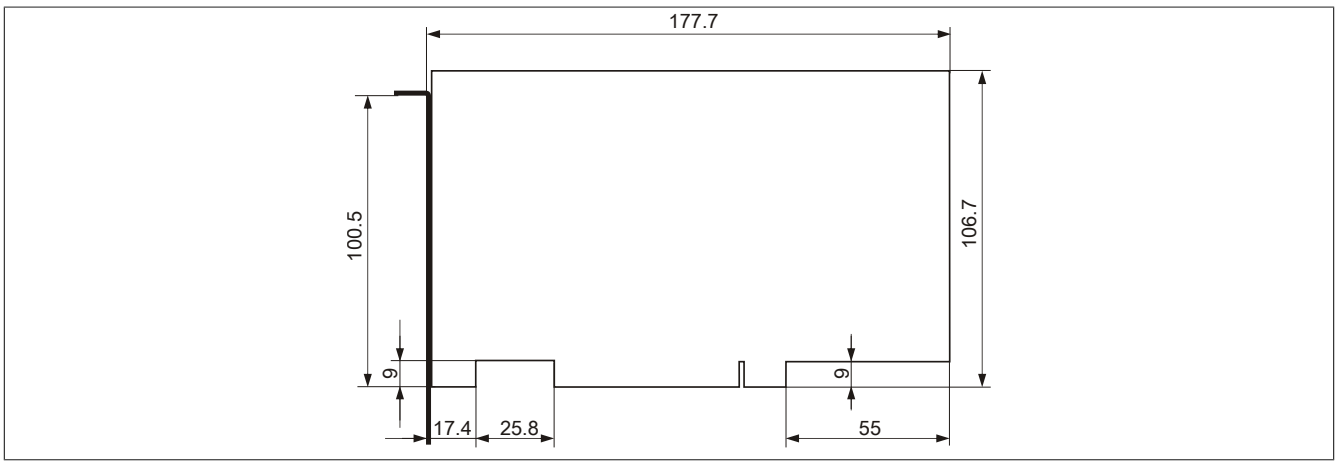

Figure 23: Standard half-size 32-bit PCI card - Dimensions

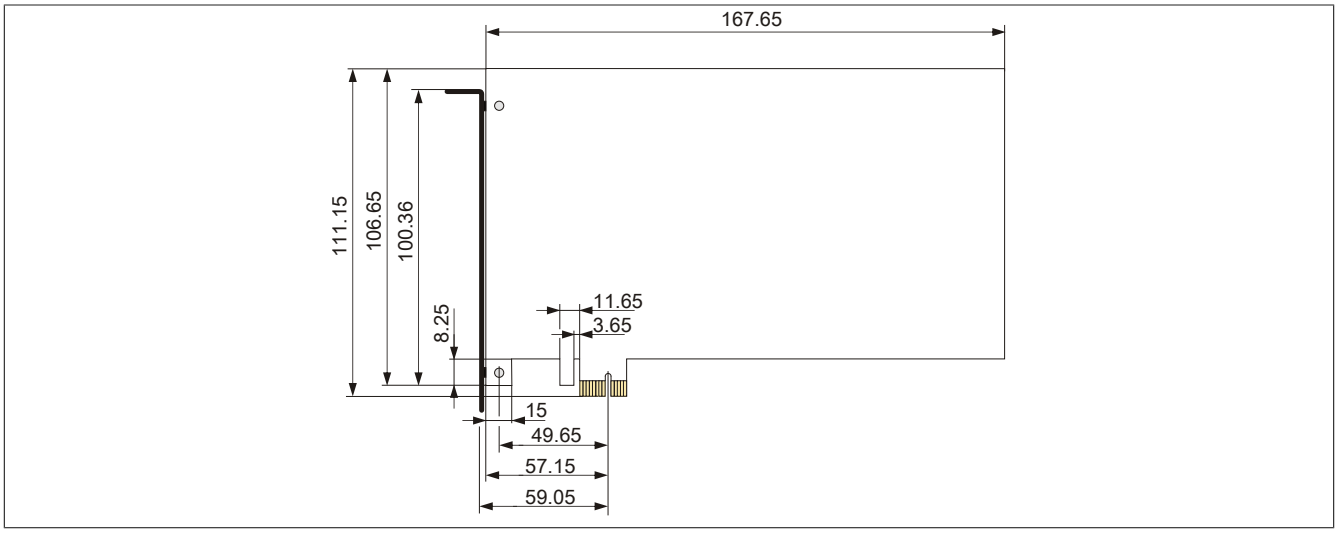

Figure 24: Standard half-size PCIe card - Dimensions

Information:

For information about installing or replacing a PCI/PCIe card, please refer to section "Installing PCI/PCIe cards" on page 391.

2.6.13 LED status indicators

LED status indicators are located on the front of the system unit.

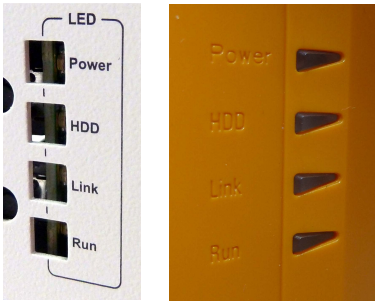

The following timing is used for the LED status indicators:
Block size: 250 ms
Repeat interval: 500 ms, 2 boxes thus represent one interval

LED	Color	Status	Function	LED status indicators
Power	Green	On	Voltage supply OK	
		Blinking	Device booted, battery status "BAD"	
			Information: **For more information, see "Battery" on page 65.**	
	Red	On	System in standby mode (S5: Soft-off mode or S4: Hibernation mode suspend-to-disk)	
		Blinking	MTCX running, battery status "BAD". System in standby mode (S5: Soft-off mode or S4: Hibernation mode suspend-to-disk)	
	Red/Green	Blinking	Faulty or incomplete BIOS, MTCX or I/O FPGA update, battery status OK, voltage supply OK	
			Faulty or incomplete BIOS, MTCX or I/O FPGA update, battery status OK, standby mode (S5: Soft-off mode or S4: Hibernation mode suspend-to-disk)	
			Faulty or incomplete BIOS, MTCX or I/O FPGA update, battery status BAD, voltage supply OK	
			Faulty or incomplete BIOS, MTCX or I/O FPGA update, battery status BAD, standby mode (S5: Soft-off mode or S4: Hibernation mode suspend-to-disk)	
			Information: **An update must be performed again.**	
	Yellow	On	Voltage supply not OK, system operating from UPS	
HDD	Yellow	On	Indicates drive access (HDD, CFast)	
Link	Yellow	On	Indicates an active SDL connection on the male panel connector	
		Blinking	Indicates that an active SDL connection has been interrupted by a loss of power to the display unit	
			Information: **Check the voltage supply / power connector of the connected display unit.**	
Run	Green	Blinking	Automation Runtime booting Controlled by Automation Runtime (ARemb and ARwin)	
	Green	On	Application running Controlled by Automation Runtime (ARemb and ARwin)	
	Red	On	Application in service mode Controlled by Automation Runtime (ARemb and ARwin)	
		Blinking	Indicates a licensing violation	

Table 31: LED status indicators - Data

2.6.14 Power button

The power button provides a wide range of ATX power supply functions.

Power button	
The power button can be pressed with a pointed object (e.g. paper clip or tip of a pen). The power button acts like the on/off switch on a normal desktop PC with an ATX power supply: **Press and release** ... Switches on the APC910 or shuts down the operating system and switches off the APC910 **Press and hold** ... Switches off the ATX power supply without shutting down the APC910 (**data could be lost!**) Pressing the power button does not reset the MTCX processor.	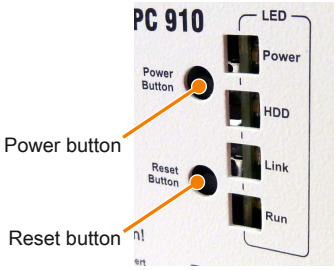

Table 32: Power button

2.6.15 Reset button

Reset button	
The reset button can be pressed with a pointed object (e.g. paper clip or tip of a pen). Pushing the reset button triggers a hardware and PCI reset. The APC910 is restarted (cold restart). Pressing the reset button does not reset the MTCX processor.	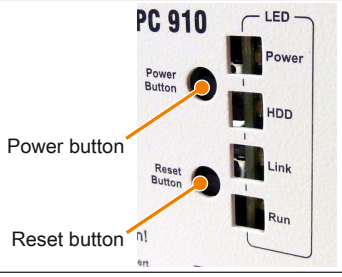

Table 33: Reset button

Warning!

A system reset can result in lost data!

2.6.16 Battery

The lithium battery (3 V, 950 mAh) buffers the internal real-time clock (RTC). It is located behind the black cover on the front of the device. The battery's buffer time is at least 4 years (at 50°C, 8.5 µA for the components being supplied and a self-discharge of 40%). If an SRAM interface option has been installed, this lifespan is reduced to 2½ years. The battery has a limited service life and should be replaced regularly (after the specified service life at the latest).

Battery		
Battery Type Removable Service life	 Renata 950 mAh Yes, accessible from the outside 4 years[1]	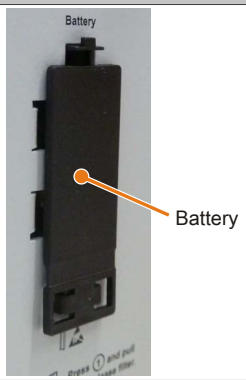
Model number	**Short description**	
	Batteries	
0AC201.91	Lithium batteries, 4 pcs., 3 V / 950 mAh, button cell	
4A0006.00-000	Lithium battery, 1 pc., 3 V / 950 mAh, button cell	

Table 34: Battery

1) At 50°C, 8.5 µA of the supplied components and a self-discharge of 40%. If an SRAM interface option has been installed, the service life is 2½ years.

The status of the battery is determined immediately after the device is started and subsequently checked by the system every 24 hours. During this measurement, the battery is subjected to a brief load (approximately 1 second) and then evaluated. Once determined, the battery status is displayed in BIOS (Advanced - OEM features - System board features - Voltage values) and in the B&R Control Center (ADI driver); it can also be read in a customer application using the ADI library.

Battery status	Function
N/A	The hardware or firmware being used is too old and does not support reading the battery status.
GOOD	Data buffering is intact.
BAD	From the point when battery capacity is recognized as insufficient (BAD), data buffering is intact for approximately another 500 hours.

Table 35: Battery status

From the point when battery capacity is recognized as insufficient, data buffering is intact for approximately another 500 hours. When replacing the battery, data is buffered for approximately 10 minutes by a gold leaf capacitor.

2.6.17 CFast slot

The APC910 offers an easy-to-access CFast slot behind its front cover so that a CFast card can be used as removable media for transferring data or performing upgrades.

This CFast slot is connected to the chipset internally via SATA 1 with SATA III design (SATA 6 Gbit/s).

CFast slot		
Connection	SATA 1	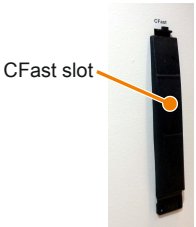
Model number	**Short description**	
	CFast cards	
5CFAST.2048-00	CFast card, 2 GB SLC	
5CFAST.4096-00	CFast card, 4 GB SLC	
5CFAST.8192-00	CFast card, 8 GB SLC	
5CFAST.016G-00	CFast card, 16 GB SLC	
5CFAST.032G-00	CFast card, 32 GB SLC	
5CFAST.032G-10	CFast card, 32 GB MLC	
5CFAST.064G-10	CFast card, 64 GB MLC	
5CFAST.128G-10	CFast card, 128 GB MLC	

Table 36: CFast slot

Warning!

Power must be disconnected before inserting or removing the CFast card.

2.6.18 Slide-in compact slot

The slide-in compact slot is connected to the chipset internally via SATA 0 with SATA III design (SATA 6 Gbit/s).

Slide-in compact slot		
Connection	SATA 0	
Model number	**Short description**	
	Drives	
5AC901.CHDD-00	250 GB hard disk - Slide-in compact - SATA	
5AC901.CHDD-01	500 GB hard disk - Slide-in compact - SATA	
5AC901.CSSD-00	32 GB SSD (SLC) - Slide-in compact - SATA	
5AC901.CSSD-01	60 GB SSD (MLC) - Slide-in compact - SATA	
5AC901.CSSD-02	180 GB SSD (MLC) - Slide-in compact - SATA	
5AC901.CSSD-03	60 GB SSD (MLC) - Slide-in compact - SATA	
5AC901.CSSD-04	128 GB SSD (MLC) - Slide-in compact - SATA	
5AC901.CSSD-05	256 GB SSD (MLC) - Slide-in compact - SATA	
5AC901.CSSD-06	512 GB SSD (MLC) - Slide-in compact - SATA	
5AC901.CCFA-00	CFast adapter - For slide-in compact slot	

Table 37: Slide-in compact slot

Information:

The slide-in compact slot cannot be accessed from the outside. The side panel must be removed in order to replace a drive. For information about installing or replacing a slide-in compact drive, please refer to the section "Installing and exchanging slide-in compact drives" on page 385.

2.6.19 Slide-in slot 1

Slide-in slot 1 is available on the 2-slot system unit (5PC910.SX02-00) and 5-slot system unit (5PC910.SX05-00). It is connected to the chipset internally via SATA 2 and USB 0 with SATA II design (SATA 3 Gbit/s).

Slide-in slot 1		
Connection	SATA 2 and USB	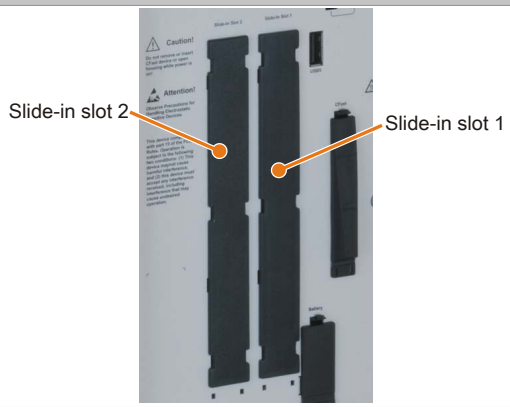
Model number	**Short description**	
	Drives	
5AC901.SDVW-00	DVD drive - DVD-R/RW|DVD+R/RW - Slide-in	
5AC901.SSCA-00	Slide-in compact adapter - For slide-in compact drives	

Table 38: Slide-in slot 1

Information:

The slide-in slot cannot be accessed from the outside. The side panel must be removed in order to replace a drive. For information about installing or replacing a slide-in drive, please refer to the section "Installing and exchanging slide-in drives" on page 388.

2.6.20 Slide-in slot 2

Slide-in slot 2 is only available on the 5-slot system unit (5PC910.SX05-00). It is connected to the chipset internally via SATA 3 and USB 0 with SATA II design (SATA 3 Gbit/s).

Slide-in slot 2		
Connection	SATA 3 and USB	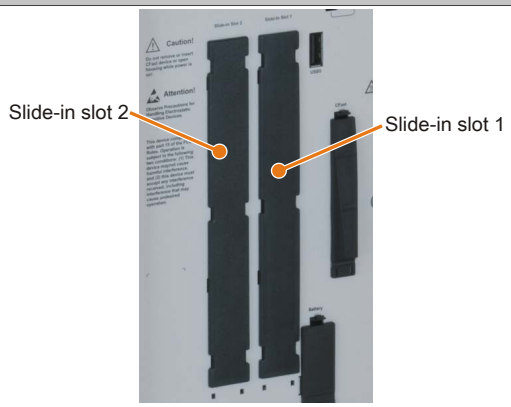
Model number	**Short description**	
	Drives	
5AC901.SDVW-00	DVD drive - DVD-R/RW|DVD+R/RW - Slide-in	
5AC901.SSCA-00	Slide-in compact adapter - For slide-in compact drives	

Table 39: Slide-in slot 2

Information:

The slide-in slot cannot be accessed from the outside. The side panel must be removed in order to replace a drive. For information about installing or replacing a slide-in drive, please refer to the section "Installing and exchanging slide-in drives" on page 388.

3 Individual components

3.1 System units

The system unit unites all of the individual components into one compact device. It consists of a housing and an integrated mainboard. Interfaces are easily accessible either on top of the device or behind the orange cover on the front. System units have either 1, 2 or 5 card slots.

The front cover is not included with the system unit and must be ordered separately, see "Front covers" on page 190.

3.1.1 5PC910.SX01-00

3.1.1.1 General information

- Slot for a bus unit with 1 PCI or 1 PCIe slot
- Insert for 1 slide-in compact drive
- Insert for 2 interface options
- SDL/DVI/Monitor and DisplayPort interfaces
- CFast slot

3.1.1.2 Order data

Model number	Short description	Figure
	System units	
5PC910.SX01-00	1-slot APC910 system unit	
	Required accessories	
	Accessories	
0TB103.9	Connector 24 VDC - 3-pin female - Screw clamp terminal block 3.31 mm²	
0TB103.91	Connector 24 VDC - 3-pin female - Cage clamp terminal block 3.31 mm²	
	Bus units	
5AC901.BX01-00	APC910 1-slot bus - 1 PCI	
5AC901.BX01-01	APC910 1-slot bus - 1 PCI Express x8	
	CPU boards	
5PC900.TS77-00	CPU board Intel Core i7 3615QE 2.3 GHz - Quad core - QM77 chipset - For APC910	
5PC900.TS77-01	CPU board Intel Core i7 3612QE 2.1 GHz - Quad core - QM77 chipset - For APC910	
5PC900.TS77-02	CPU board Intel Core i7 3555LE 2.5 GHz - Dual core - QM77 chipset - For APC910	
5PC900.TS77-03	CPU board Intel Core i7 3517UE 1.7 GHz - Dual core - QM77 chipset - For APC910	
5PC900.TS77-04	CPU board Intel Core i5 3610ME 2.7 GHz - Dual core - QM77 chipset - For APC910	
5PC900.TS77-05	CPU board Intel Core i3 3120ME 2.4 GHz - Dual core - QM77 chipset - For APC910	
5PC900.TS77-06	CPU board Intel Core i3 3217UE 1.6 GHz - Dual core - QM77 chipset - For APC910	
5PC900.TS77-07	CPU board Intel Celeron 847E 1.1 GHz - Dual core - HM76 chipset - For APC910	
5PC900.TS77-08	CPU board Intel Celeron 827E 1.4 GHz - Single core - HM76 chipset - For APC910	
5PC900.TS77-09	CPU board Intel Celeron 1020E 2.2 GHz - Dual core - HM76 chipset - For APC910	
5PC900.TS77-10	CPU board Intel Celeron 1047UE 1.4 GHz - Dual core - HM76 chipset - For APC910	
	Heat sink	
5AC901.HS00-00	APC910 heat sink, active	
5AC901.HS01-00	APC910 heat sink, passive	
	Main memory	
5MMDDR.1024-03	SO-DIMM DDR3, 1024 MB	
5MMDDR.2048-03	SO-DIMM DDR3, 2048 MB	
5MMDDR.4096-03	SO-DIMM DDR3, 4096 MB	
5MMDDR.8192-03	SO-DIMM DDR3, 8192 MB	
	Optional accessories	
	Drives	
5AC901.CCFA-00	CFast adapter - For slide-in compact slot	
5AC901.CHDD-01	500 GB hard disk - Slide-in compact - SATA	
5AC901.CSSD-04	128 GB SSD MLC - Slide-in compact - SATA	

Table 40: 5PC910.SX01-00 - Order data

Model number	Short description	Figure
5AC901.CSSD-05	256 GB SSD MLC - Slide-in compact - Toshiba - SATA	
5AC901.CSSD-06	512 GB SSD MLC - Slide-in compact - Toshiba - SATA	
	Fan kit	
5AC901.FA01-00	APC910 fan kit - For 5PC910.SX01-00	
	Front cover	
5AC901.FF01-00	Front cover for 1-slot APC910 - Orange	
5AC901.FF01-01	Front cover for 1-slot APC910 - Dark gray	
5AC901.FF01-02	Front cover for 1-slot APC910 - Dark gray - Without logo	
5AC901.FF01-03	Front cover for 1-slot APC910 - Orange - Without logo	
	Interface options	
5AC901.I485-00	Interface card - 1x RS232/422/485 interface - For APC910/PPC900	
5AC901.ICAN-00	Interface card - 1x CAN interface - For APC910/PPC900	
5AC901.IETH-00	Interface card - 1x ETH 10/100/1000 - For APC910/PPC900	
5AC901.IHDA-00	Interface card - 1x audio interface (1x MIC/1x Line In/1x OUT) - For APC910/PPC900	
5AC901.IPLK-00	Interface card - 1x POWERLINK interface - 2 MB SRAM - For APC910/PPC900	
5AC901.IRDY-00	Interface card - Ready relay - For APC910/PPC900	
5AC901.ISIO-00	Interface card - System I/O - For APC910/PPC900	
5AC901.ISRM-00	Interface cards - 2 MB SRAM - For APC910/PPC900	
	Uninterruptible power supplies	
5AC901.IUPS-00	UPS - For 4.5 Ah battery	
5AC901.IUPS-01	UPS - For 2.2 Ah battery	

Table 40: 5PC910.SX01-00 - Order data

3.1.1.3 Technical data

Model number	5PC910.SX01-00
General information	
Cooling	Passive via heat sink and optionally supported with an active fan kit
LED status indicators	Power, HDD, Link, Run
B&R ID code	0xD6DA
Battery	
Type	Renata 950 mAh
Service life	4 years [1]
Removable	Yes, accessible behind the front cover
Design	Lithium ion
Power button	Yes
Reset button	Yes
Buzzer	Yes
Certification	
CE	Yes
UL	cULus E115267 Industrial Control Equipment
DNV GL	Temperature: **B** (0 - 55°C) Humidity: **B** (up to 100%) Vibration: **A** (0.7g) EMC: **B** (Bridge and open deck)[2]
GOST-R	Yes
Controller	
Boot loader	BIOS
Real-time clock	
Battery-backed	Yes
Power failure logic	
Controller	MTCX [3]
Buffer time	10 ms
Graphics	
Controller	Depends on the CPU board being used
Memory	
Type	SO-DIMM DDR3 SDRAM
Memory size	Max. 16 GB
Interfaces	
COM1	
Type	RS232, modem-capable, not electrically isolated
Design	9-pin, male, DSUB connector
UART	16550-compatible, 16-byte FIFO
Max. baud rate	115 kbit/s
CFast slot	
Quantity	1
Type	SATA III (SATA 60 Gbit/s)

Table 41: 5PC910.SX01-00 - Technical data

Model number	5PC910.SX01-00
USB	
Quantity	5
Type	4x USB 3.0 (top) 1x USB 2.0 (front)
Design	Type A
Transfer rate	Low speed (1.5 Mbit/s), full speed (12 Mbit/s), high speed (480 Mbit/s), SuperSpeed (5 Gbit/s) [4]
Current-carrying capacity	Max. 1 A per connection
Ethernet	
Quantity	2
Design	Shielded RJ45
Transfer rate	10/100/1000 Mbit/s
Max. baud rate	1 Gbit/s
DisplayPort	
Quantity	1
Version	1.1
Monitor/Panel interface	
Design	DVI-I
Type	SDL/DVI/Monitor
Inserts	
PCI/PCIe slots	
Quantity	1 PCI slot or 1 PCIe slot [5]
Slide-in drives	
Quantity	-
Slide-in compact drives	
Quantity	1
Type	SATA III (SATA 60 Gbit/s)
Interface option	2
Monitor/Panel option	No
Add-on UPS slot	Yes [6]
Insert for fan kit	Yes
Electrical characteristics	
Nominal voltage	24 VDC ±25%, SELV [7]
Nominal current	Max. 5.5 A [8]
Starting current	Max. 60 A for <300 µs
Overvoltage category in accordance with EN 61131-2	II
Electrical isolation	Yes
Operating conditions	
EN 60529 protection	IP20 [9]
Environmental conditions	
Temperature	
Operation	Component-dependent [10]
Storage	-20 to 60°C
Transport	-20 to 60°C
Relative humidity	
Operation	Component-dependent
Storage	Component-dependent
Transport	Component-dependent
Vibration [11]	
Operation (continuous)	2 to 9 Hz: 1.75 mm amplitude / 9 to 200 Hz: 0.5 g
Operation (occasional)	2 to 9 Hz: 3.5 mm amplitude / 9 to 200 Hz: 1 g
Storage	2 to 8 Hz: 7.5 mm amplitude / 8 to 200 Hz: 2 g / 200 to 500 Hz: 4 g
Transport	2 to 8 Hz: 7.5 mm amplitude / 8 to 200 Hz: 2 g / 200 to 500 Hz: 4 g
Shock [11]	
Operation	15 g, 11 ms
Storage	30 g, 6 ms
Transport	30 g, 6 ms
Elevation	
Operation	-300 to 3000 m above sea level [12]
Mechanical characteristics	
Housing [13]	
Material	Galvanized plate, plastic
Coating	Anthracite gray
Dimensions	
Width	91 mm
Height	270 mm
Depth	254.75 mm
Weight	2050 g

Table 41: 5PC910.SX01-00 - Technical data

1) At 50°C, 8.5 µA of the supplied components and a self-discharge of 40%. If an interface option with SRAM or POWERLINK has been installed, the service life is 2½ years.
2) Yes, although applies only if all components installed within the complete system have this certification.
3) Maintenance Controller Extended.
4) The SuperSpeed transfer rate (5 Gbit/s) is only possible with USB 3.0.

5) The PCI and PCIe slots available depend on the 5AC901.BX01-00 and 5AC901.BX01-01 bus unit being used.
6) This UPS module can only be operated in the IF option 1 slot.
7) EN 60950 requirements must be observed, see section "+24 VDC power supply" in the user's manual.
8) Maximum current consumption (24 V / 130 W). This can vary depending on the configuration (see "Power calculation" section). The inrush current must also be taken into consideration when selecting the power supply.
9) Only when all interface covers and the front cover are closed.
10) Detailed information can be found in the temperature tables in the user's manual.
11) Maximum values unless specified otherwise by another individual component. Vibration testing is performed in accordance with EN 60068-2-6. Shock testing is performed in accordance with EN 60068-2-27.
12) The maximum ambient temperature is typically derated by 1°C per 1000 meters (starting at 500 meters above sea level).
13) There may be visible deviations in the color and surface appearance depending on the process or batch.

3.1.1.4 Dimensions

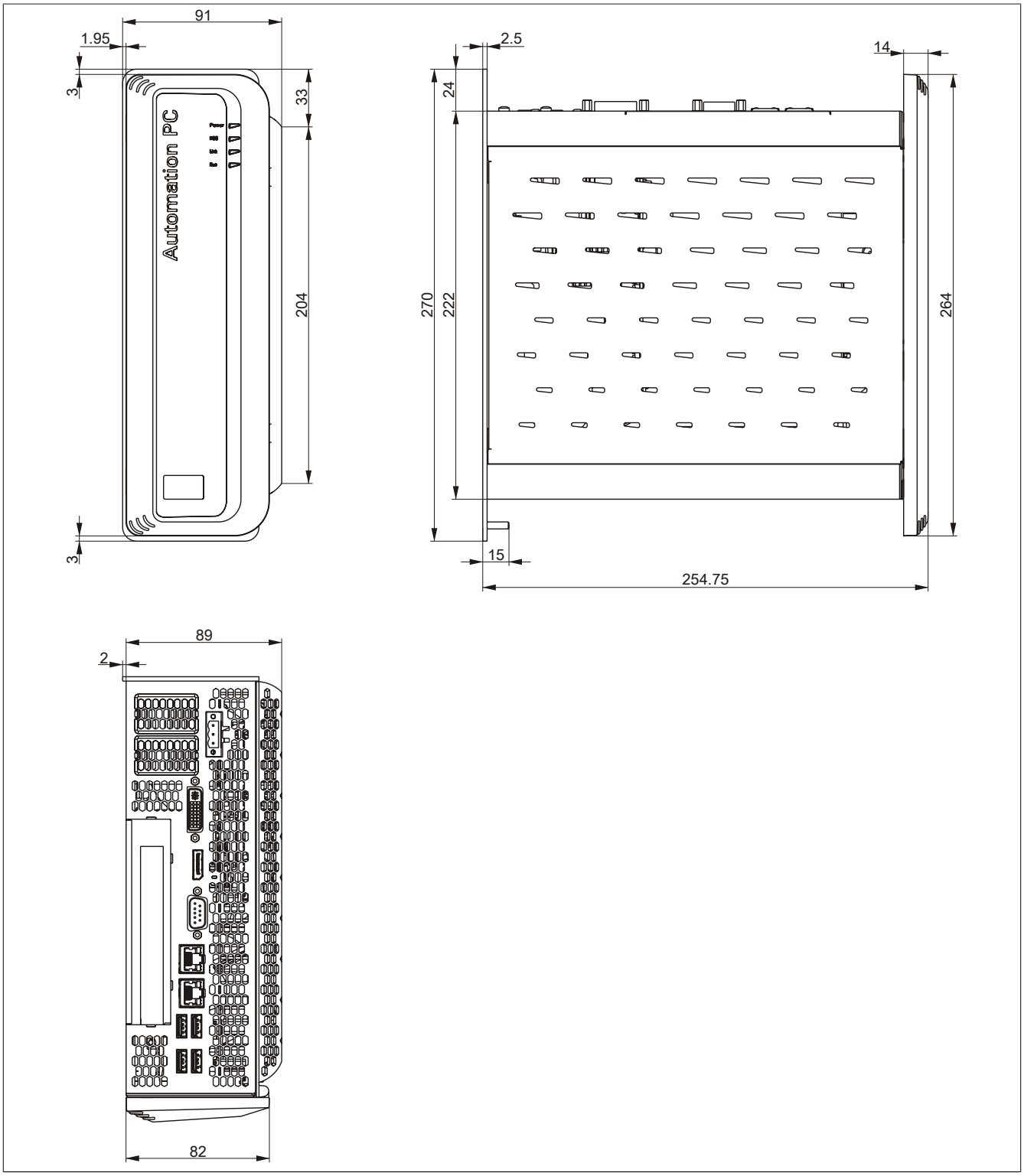

Figure 25: 5PC910.SX01-00 - Dimensions

3.1.1.5 Drilling template

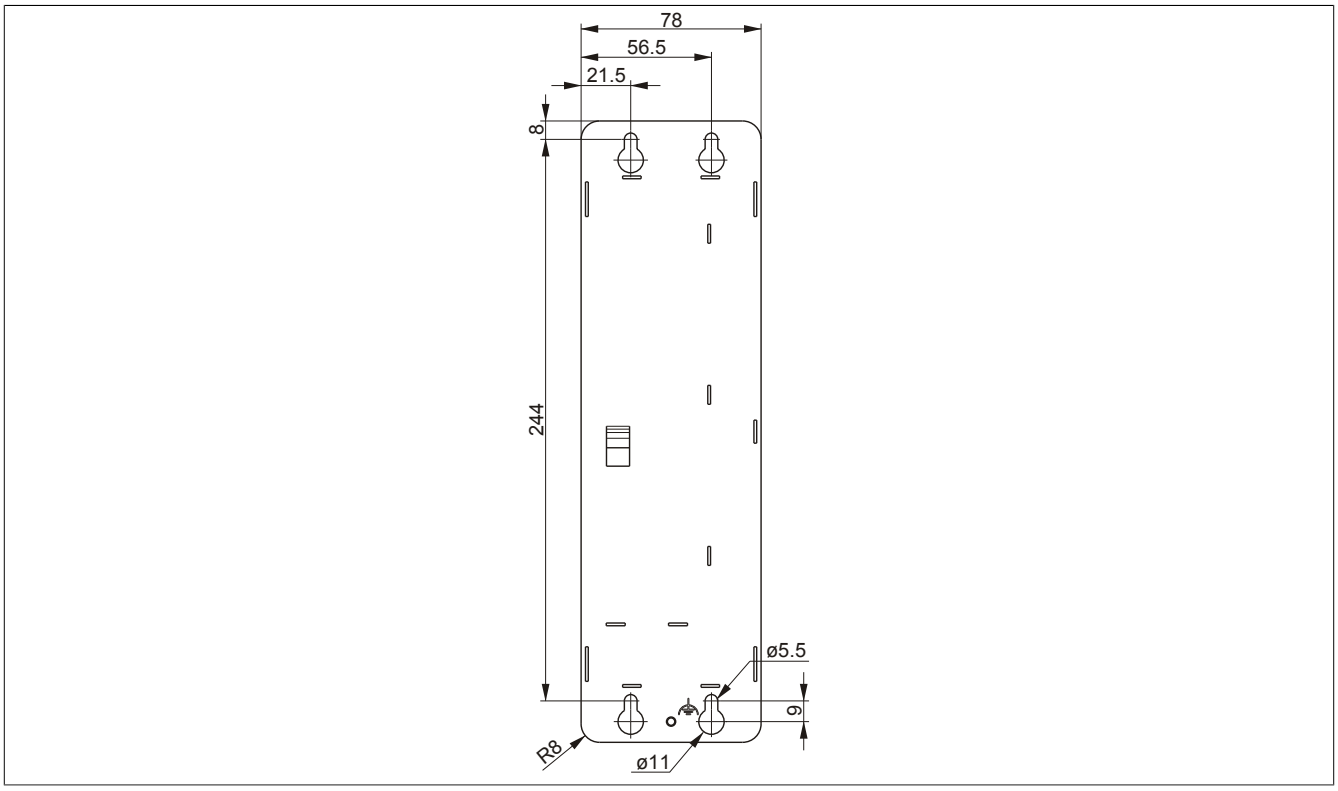

Figure 26: 5PC910.SX01-00 - Drilling template

3.1.2 5PC910.SX02-00

3.1.2.1 General information

- Slot for a bus unit with 2 PCI slots or 1 PCI and 1 PCIe slots
- Insert for 1 slide-in compact drive and 1 slide-in drive
- Insert for 2 interface options
- SDL/DVI/Monitor and DisplayPort interfaces
- Insert for monitor/panel option
- CFast slot

3.1.2.2 Order data

Model number	Short description	Figure
	System units	
5PC910.SX02-00	2-slot APC910 system unit	
	Required accessories	
	Accessories	
0TB103.9	Connector 24 VDC - 3-pin female - Screw clamp terminal block 3.31 mm²	
0TB103.91	Connector 24 VDC - 3-pin female - Cage clamp terminal block 3.31 mm²	
	Bus units	
5AC901.BX02-00	APC910 2-slot bus - 2 PCI	
5AC901.BX02-01	APC910 2-slot bus - 1 PCI - 1 PCI Express x8	
5AC901.BX02-02	APC910 2-slot bus - 2 PCI Express x4	
	CPU boards	
5PC900.TS77-00	CPU board Intel Core i7 3615QE 2.3 GHz - Quad core - QM77 chipset - For APC910	
5PC900.TS77-01	CPU board Intel Core i7 3612QE 2.1 GHz - Quad core - QM77 chipset - For APC910	
5PC900.TS77-02	CPU board Intel Core i7 3555LE 2.5 GHz - Dual core - QM77 chipset - For APC910	
5PC900.TS77-03	CPU board Intel Core i7 3517UE 1.7 GHz - Dual core - QM77 chipset - For APC910	
5PC900.TS77-04	CPU board Intel Core i5 3610ME 2.7 GHz - Dual core - QM77 chipset - For APC910	
5PC900.TS77-05	CPU board Intel Core i3 3120ME 2.4 GHz - Dual core - QM77 chipset - For APC910	
5PC900.TS77-06	CPU board Intel Core i3 3217UE 1.6 GHz - Dual core - QM77 chipset - For APC910	
5PC900.TS77-07	CPU board Intel Celeron 847E 1.1 GHz - Dual core - HM76 chipset - For APC910	
5PC900.TS77-08	CPU board Intel Celeron 827E 1.4 GHz - Single core - HM76 chipset - For APC910	
5PC900.TS77-09	CPU board Intel Celeron 1020E 2.2 GHz - Dual core - HM76 chipset - For APC910	
5PC900.TS77-10	CPU board Intel Celeron 1047UE 1.4 GHz - Dual core - HM76 chipset - For APC910	
	Heat sink	
5AC901.HS00-00	APC910 heat sink, active	
5AC901.HS01-00	APC910 heat sink, passive	
	Main memory	
5MMDDR.1024-03	SO-DIMM DDR3, 1024 MB	
5MMDDR.2048-03	SO-DIMM DDR3, 2048 MB	
5MMDDR.4096-03	SO-DIMM DDR3, 4096 MB	
5MMDDR.8192-03	SO-DIMM DDR3, 8192 MB	
	Optional accessories	
	Drives	
5AC901.CCFA-00	CFast adapter - For slide-in compact slot	
5AC901.CHDD-01	500 GB hard disk - Slide-in compact - SATA	
5AC901.CSSD-04	128 GB SSD MLC - Slide-in compact - SATA	
5AC901.CSSD-05	256 GB SSD MLC - Slide-in compact - Toshiba - SATA	
5AC901.CSSD-06	512 GB SSD MLC - Slide-in compact - Toshiba - SATA	
5AC901.SDVW-00	DVD drive - DVD-R/RW|DVD+R/RW - Slide-in	
5AC901.SSCA-00	Slide-in compact adapter - For slide-in compact drives	
	Fan kit	
5AC901.FA02-00	APC910 fan kit - For 5PC910.SX02-00	
	Front cover	
5AC901.FF02-00	Front cover for 2-slot APC910 - Orange	
5AC901.FF02-01	Front cover for 2-slot APC910 - Dark gray	
5AC901.FF02-02	Front cover for 2-slot APC910 - Dark gray - Without logo	

Table 42: 5PC910.SX02-00 - Order data

Model number	Short description	Figure
5AC901.FF02-03	Front cover for 2-slot APC910 - Orange - Without logo	
	Interface options	
5AC901.I485-00	Interface card - 1x RS232/422/485 interface - For APC910/PPC900	
5AC901.ICAN-00	Interface card - 1x CAN interface - For APC910/PPC900	
5AC901.IETH-00	Interface card - 1x ETH 10/100/1000 - For APC910/PPC900	
5AC901.IHDA-00	Interface card - 1x audio interface (1x MIC/1x Line In/1x OUT) - For APC910/PPC900	
5AC901.IPLK-00	Interface card - 1x POWERLINK interface - 2 MB SRAM - For APC910/PPC900	
5AC901.IRDY-00	Interface card - Ready relay - For APC910/PPC900	
5AC901.ISIO-00	Interface card - System I/O - For APC910/PPC900	
5AC901.ISRM-00	Interface cards - 2 MB SRAM - For APC910/PPC900	
	Monitor/Panel options	
5AC901.LDPO-00	DisplayPort transmitter	
5AC901.LSD3-00	SDL3 transmitter	
5AC901.LSDL-00	SDL/DVI transmitter	
	Uninterruptible power supplies	
5AC901.IUPS-00	UPS - For 4.5 Ah battery	
5AC901.IUPS-01	UPS - For 2.2 Ah battery	

Table 42: 5PC910.SX02-00 - Order data

3.1.2.3 Technical data

Model number	5PC910.SX02-00
General information	
Cooling	Passive via heat sink and optionally supported with an active fan kit
LED status indicators	Power, HDD, Link, Run
B&R ID code	0xD6DB
Battery	
Type	Renata 950 mAh
Service life	4 years [1]
Removable	Yes, accessible behind the front cover
Design	Lithium ion
Power button	Yes
Reset button	Yes
Buzzer	Yes
Certification	
CE	Yes
UL	cULus E115267 Industrial Control Equipment
DNV GL	Temperature: **B** (0 - 55°C) Humidity: **B** (up to 100%) Vibration: **A** (0.7g) EMC: **B** (Bridge and open deck)[2]
GOST-R	Yes
Controller	
Boot loader	BIOS
Real-time clock	
Battery-backed	Yes
Power failure logic	
Controller	MTCX [3]
Buffer time	10 ms
Graphics	
Controller	Depends on the CPU board being used
Memory	
Type	SO-DIMM DDR3 SDRAM
Memory size	Max. 16 GB
Interfaces	
COM1	
Type	RS232, modem-capable, not electrically isolated
Design	9-pin, male, DSUB connector
UART	16550-compatible, 16-byte FIFO
Max. baud rate	115 kbit/s
CFast slot	
Quantity	1
Type	SATA III (SATA 60 Gbit/s)

Table 43: 5PC910.SX02-00 - Technical data

Model number	5PC910.SX02-00
USB	
Quantity	5
Type	4x USB 3.0 (top) 1x USB 2.0 (front)
Design	Type A
Transfer rate	Low speed (1.5 Mbit/s), full speed (12 Mbit/s), high speed (480 Mbit/s), SuperSpeed (5 Gbit/s) [4]
Current-carrying capacity	Max. 1 A per connection
Ethernet	
Quantity	2
Design	Shielded RJ45
Transfer rate	10/100/1000 Mbit/s
Max. baud rate	1 Gbit/s
DisplayPort	
Quantity	1
Version	1.1
Monitor/Panel interface	
Design	DVI-I
Type	SDL/DVI/Monitor
Inserts	
PCI/PCIe slots	
Quantity	2 PCI slots or 1 PCI slots and 1 PCIe slot or 2 PCIe slots [5]
Slide-in drives	
Quantity	1
Type	SATA II (SATA 30 Gbit/s)
Slide-in compact drives	
Quantity	1
Type	SATA III (SATA 60 Gbit/s)
Interface option	2
Monitor/Panel option	1
Add-on UPS slot	Yes [6]
Insert for fan kit	Yes
Electrical characteristics	
Nominal voltage	24 VDC ±25%, SELV [7]
Nominal current	Max. 5.5 A [8]
Starting current	Max. 60 A for <300 µs
Overvoltage category in accordance with EN 61131-2	II
Electrical isolation	Yes
Operating conditions	
EN 60529 protection	IP20 [9]
Environmental conditions	
Temperature	
Operation	Component-dependent [10]
Storage	-20 to 60°C
Transport	-20 to 60°C
Relative humidity	
Operation	Component-dependent
Storage	Component-dependent
Transport	Component-dependent
Vibration [11]	
Operation (continuous)	2 to 9 Hz: 1.75 mm amplitude / 9 to 200 Hz: 0.5 g
Operation (occasional)	2 to 9 Hz: 3.5 mm amplitude / 9 to 200 Hz: 1 g
Storage	2 to 8 Hz: 7.5 mm amplitude / 8 to 200 Hz: 2 g / 200 to 500 Hz: 4 g
Transport	2 to 8 Hz: 7.5 mm amplitude / 8 to 200 Hz: 2 g / 200 to 500 Hz: 4 g
Shock [11]	
Operation	15 g, 11 ms
Storage	30 g, 6 ms
Transport	30 g, 6 ms
Elevation	
Operation	-300 to 3000 m above sea level [12]
Mechanical characteristics	
Housing [13]	
Material	Galvanized plate, plastic
Coating	Anthracite gray

Table 43: 5PC910.SX02-00 - Technical data

Model number	5PC910.SX02-00
Dimensions	
Width	130 mm
Height	270 mm
Depth	254.75 mm
Weight	2550 g

Table 43: 5PC910.SX02-00 - Technical data

1) At 50°C, 8.5 µA of the supplied components and a self-discharge of 40%. If an interface option with SRAM or POWERLINK has been installed, the service life is 2½ years.
2) Yes, although applies only if all components installed within the complete system have this certification.
3) Maintenance Controller Extended.
4) The SuperSpeed transfer rate (5 Gbit/s) is only possible with USB 3.0.
5) The PCI and PCIe slots available depend on the bus unit being used (5AC901.BX02-00, 5AC901.BX02-01 or 5AC901.BX02-02).
6) This UPS module can only be operated in the IF option 1 slot.
7) EN 60950 requirements must be observed, see section "+24 VDC power supply" in the user's manual.
8) Maximum current consumption (24 V / 130 W). This can vary depending on the configuration (see "Power calculation" section). The inrush current must also be taken into consideration when selecting the power supply.
9) Only when all interface covers and the front cover are closed.
10) Detailed information can be found in the temperature tables in the user's manual.
11) Maximum values unless specified otherwise by another individual component. Vibration testing is performed in accordance with EN 60068-2-6. Shock testing is performed in accordance with EN 60068-2-27.
12) The maximum ambient temperature is typically derated by 1°C per 1000 meters (starting at 500 meters above sea level).
13) There may be visible deviations in the color and surface appearance depending on the process or batch.

3.1.2.4 Dimensions

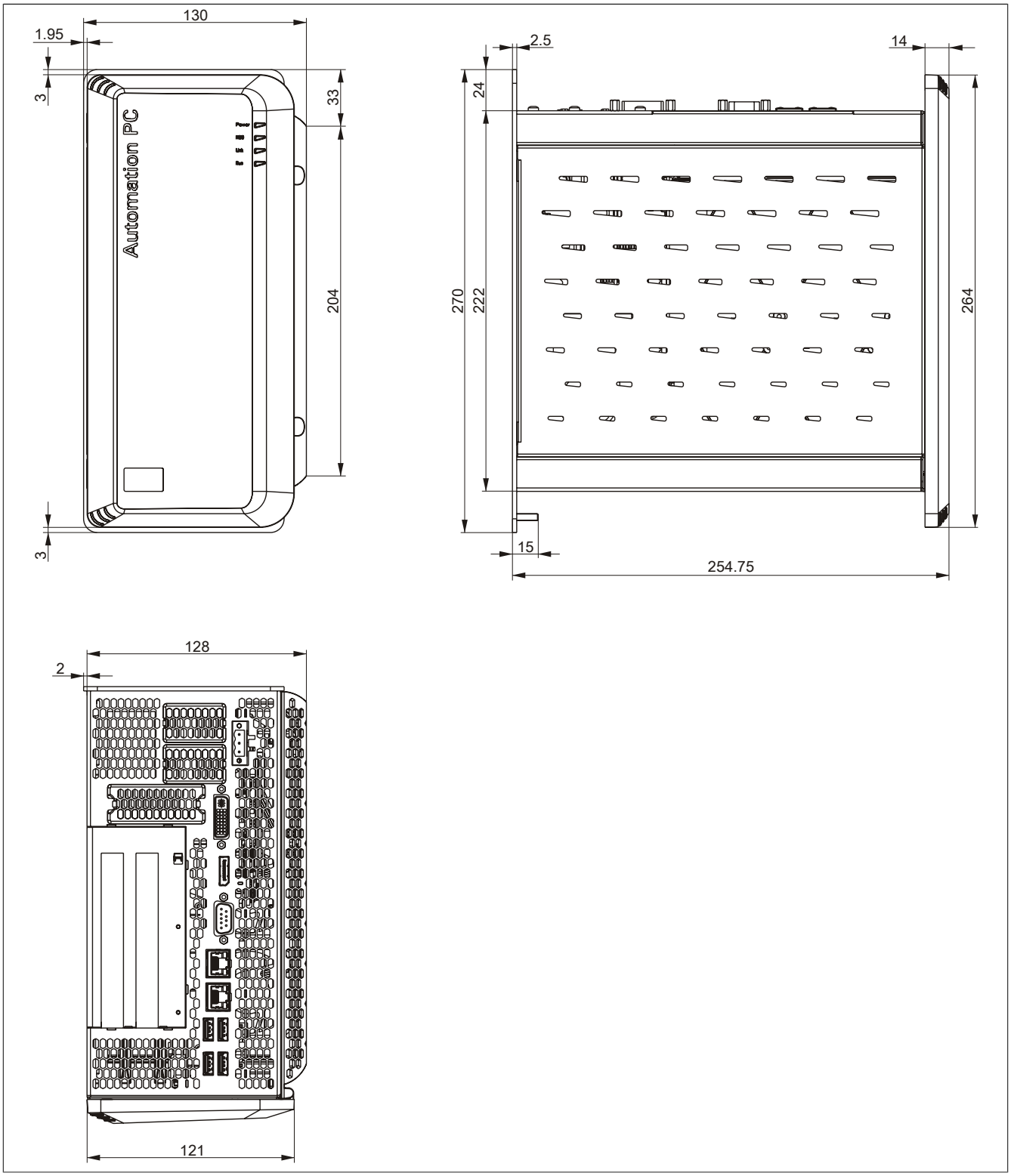

Figure 27: 5PC910.SX02-00 - Dimensions

3.1.2.5 Drilling template

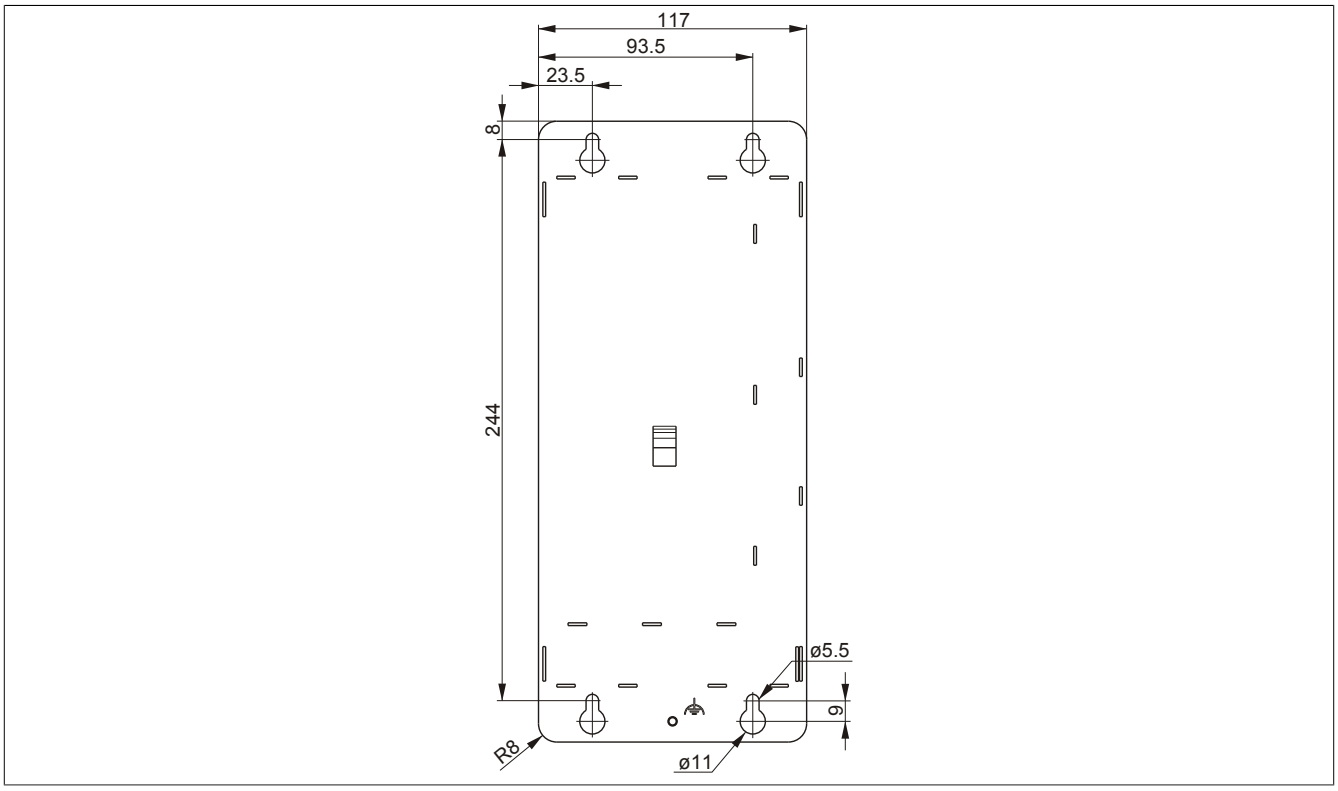

Figure 28: 5PC910.SX02-00 - Drilling template

3.1.3 5PC910.SX05-00

3.1.3.1 General information

- Slot for a bus unit with 5 PCI/PCIe slots
- Insert for 1 slide-in compact drive and 2 slide-in drives
- Insert for 2 interface options
- SDL/DVI/Monitor and DisplayPort interfaces
- Insert for monitor/panel option
- CFast slot

3.1.3.2 Order data

Model number	Short description	Figure
	System units	
5PC910.SX05-00	5-slot APC910 system unit	
	Required accessories	
	Accessories	
0TB103.9	Connector 24 VDC - 3-pin female - Screw clamp terminal block 3.31 mm²	
0TB103.91	Connector 24 VDC - 3-pin female - Cage clamp terminal block 3.31 mm²	
	Bus units	
5AC901.BX05-00	APC910 5-slot bus - 5 PCI	
5AC901.BX05-01	APC910 5-slot bus - 4 PCI - 1 PCI Express x8	
5AC901.BX05-02	APC910 5-slot bus - 2 PCI - 1 PCI Express x8 - 2 PCI Express x1	
5AC901.BX05-03	APC910 5-slot bus - 2 PCI Express x4 - 3 PCI Express x1	
	CPU boards	
5PC900.TS77-00	CPU board Intel Core i7 3615QE 2.3 GHz - Quad core - QM77 chipset - For APC910	
5PC900.TS77-01	CPU board Intel Core i7 3612QE 2.1 GHz - Quad core - QM77 chipset - For APC910	
5PC900.TS77-02	CPU board Intel Core i7 3555LE 2.5 GHz - Dual core - QM77 chipset - For APC910	
5PC900.TS77-03	CPU board Intel Core i7 3517UE 1.7 GHz - Dual core - QM77 chipset - For APC910	
5PC900.TS77-04	CPU board Intel Core i5 3610ME 2.7 GHz - Dual core - QM77 chipset - For APC910	
5PC900.TS77-05	CPU board Intel Core i3 3120ME 2.4 GHz - Dual core - QM77 chipset - For APC910	
5PC900.TS77-06	CPU board Intel Core i3 3217UE 1.6 GHz - Dual core - QM77 chipset - For APC910	
5PC900.TS77-07	CPU board Intel Celeron 847E 1.1 GHz - Dual core - HM76 chipset - For APC910	
5PC900.TS77-08	CPU board Intel Celeron 827E 1.4 GHz - Single core - HM76 chipset - For APC910	
5PC900.TS77-09	CPU board Intel Celeron 1020E 2.2 GHz - Dual core - HM76 chipset - For APC910	
5PC900.TS77-10	CPU board Intel Celeron 1047UE 1.4 GHz - Dual core - HM76 chipset - For APC910	
	Heat sink	
5AC901.HS00-00	APC910 heat sink, active	
5AC901.HS01-00	APC910 heat sink, passive	
	Main memory	
5MMDDR.1024-03	SO-DIMM DDR3, 1024 MB	
5MMDDR.2048-03	SO-DIMM DDR3, 2048 MB	
5MMDDR.4096-03	SO-DIMM DDR3, 4096 MB	
5MMDDR.8192-03	SO-DIMM DDR3, 8192 MB	
	Optional accessories	
	Drives	
5AC901.CCFA-00	CFast adapter - For slide-in compact slot	
5AC901.CHDD-01	500 GB hard disk - Slide-in compact - SATA	
5AC901.CSSD-04	128 GB SSD MLC - Slide-in compact - SATA	
5AC901.CSSD-05	256 GB SSD MLC - Slide-in compact - Toshiba - SATA	
5AC901.CSSD-06	512 GB SSD MLC - Slide-in compact - Toshiba - SATA	
5AC901.SDVW-00	DVD drive - DVD-R/RW|DVD+R/RW - Slide-in	
5AC901.SSCA-00	Slide-in compact adapter - For slide-in compact drives	
	Fan kit	
5AC901.FA05-00	APC910 fan kit - For 5PC910.SX05-00 system unit	
	Front cover	
5AC901.FF05-00	Front cover for 5-slot APC910 - Orange	
5AC901.FF05-01	Front cover for 5-slot APC910 - Dark gray	

Table 44: 5PC910.SX05-00 - Order data

Model number	Short description	Figure
5AC901.FF05-02	Front cover for 5-slot APC910 - Dark gray - Without logo	
5AC901.FF05-03	Front cover for 5-slot APC910 - Orange - Without logo	
	Interface options	
5AC901.I485-00	Interface card - 1x RS232/422/485 interface - For APC910/PPC900	
5AC901.ICAN-00	Interface card - 1x CAN interface - For APC910/PPC900	
5AC901.IETH-00	Interface card - 1x ETH 10/100/1000 - For APC910/PPC900	
5AC901.IHDA-00	Interface card - 1x audio interface (1x MIC/1x Line In/1x OUT) - For APC910/PPC900	
5AC901.IPLK-00	Interface card - 1x POWERLINK interface - 2 MB SRAM - For APC910/PPC900	
5AC901.IRDY-00	Interface card - Ready relay - For APC910/PPC900	
5AC901.ISIO-00	Interface card - System I/O - For APC910/PPC900	
5AC901.ISRM-00	Interface cards - 2 MB SRAM - For APC910/PPC900	
	Monitor/Panel options	
5AC901.LDPO-00	DisplayPort transmitter	
5AC901.LSD3-00	SDL3 transmitter	
5AC901.LSDL-00	SDL/DVI transmitter	
	Uninterruptible power supplies	
5AC901.IUPS-00	UPS - For 4.5 Ah battery	
5AC901.IUPS-01	UPS - For 2.2 Ah battery	

Table 44: 5PC910.SX05-00 - Order data

3.1.3.3 Technical data

Model number	5PC910.SX05-00
General information	
Cooling	Passive via heat sink and optionally supported with an active fan kit
LED status indicators	Power, HDD, Link, Run
B&R ID code	0xD844
Battery	
Type	Renata 950 mAh
Service life	4 years [1]
Removable	Yes, accessible behind the front cover
Design	Lithium ion
Power button	Yes
Reset button	Yes
Buzzer	Yes
Certification	
CE	Yes
UL	cULus E115267 Industrial Control Equipment
GOST-R	Yes
Controller	
Boot loader	BIOS
Real-time clock	
Battery-backed	Yes
Power failure logic	
Controller	MTCX [2]
Buffer time	10 ms
Graphics	
Controller	Depends on the CPU board being used
Memory	
Type	SO-DIMM DDR3 SDRAM
Memory size	Max. 16 GB
Interfaces	
COM1	
Type	RS232, modem-capable, not electrically isolated
Design	9-pin, male, DSUB connector
UART	16550-compatible, 16-byte FIFO
Max. baud rate	115 kbit/s
CFast slot	
Quantity	1
Type	SATA III (SATA 60 Gbit/s)
USB	
Quantity	5
Type	4x USB 3.0 (top) 1x USB 2.0 (front)
Design	Type A
Transfer rate	Low speed (1.5 Mbit/s), full speed (12 Mbit/s), high speed (480 Mbit/s), SuperSpeed (5 Gbit/s) [3]
Current-carrying capacity	Max. 1 A per connection

Table 45: 5PC910.SX05-00 - Technical data

Model number	5PC910.SX05-00
Ethernet	
Quantity	2
Design	Shielded RJ45
Transfer rate	10/100/1000 Mbit/s
Max. baud rate	1 Gbit/s
DisplayPort	
Quantity	1
Version	1.1
Monitor/Panel interface	
Design	DVI-I
Type	SDL/DVI/Monitor
Inserts	
PCI/PCIe slots	
Quantity	5 PCI slots or 4 PCI slots and 1 PCIe slot or 2 PCI slots and 3 PCIe slots or 5 PCIe slots [4]
Slide-in drives	
Quantity	2
Type	SATA II (SATA 30 Gbit/s)
Slide-in compact drives	
Quantity	1
Type	SATA III (SATA 60 Gbit/s)
Interface option	2
Monitor/Panel option	1
Add-on UPS slot	Yes [5]
Insert for fan kit	Yes
Electrical characteristics	
Nominal voltage	24 VDC ±25%, SELV [6]
Nominal current	Max. 5.5 A [7]
Starting current	Max. 60 A for <300 µs
Overvoltage category in accordance with EN 61131-2	II
Electrical isolation	Yes
Operating conditions	
EN 60529 protection	IP20 [8]
Environmental conditions	
Temperature	
Operation	Component-dependent [9]
Storage	-20 to 60°C
Transport	-20 to 60°C
Relative humidity	
Operation	Component-dependent
Storage	Component-dependent
Transport	Component-dependent
Vibration [10]	
Operation (continuous)	2 to 9 Hz: 1.75 mm amplitude / 9 to 200 Hz: 0.5 g
Operation (occasional)	2 to 9 Hz: 3.5 mm amplitude / 9 to 200 Hz: 1 g
Storage	2 to 8 Hz: 7.5 mm amplitude / 8 to 200 Hz: 2 g / 200 to 500 Hz: 4 g
Transport	2 to 8 Hz: 7.5 mm amplitude / 8 to 200 Hz: 2 g / 200 to 500 Hz: 4 g
Shock [10]	
Operation	15 g, 11 ms
Storage	30 g, 6 ms
Transport	30 g, 6 ms
Elevation	
Operation	-300 to 3000 m above sea level [11]
Mechanical characteristics	
Housing [12]	
Material	Galvanized plate, plastic
Coating	Anthracite gray
Dimensions	
Width	211 mm
Height	270 mm
Depth	254.75 mm
Weight	2850 g

Table 45: 5PC910.SX05-00 - Technical data

1) At 50°C, 8.5 µA of the supplied components and a self-discharge of 40%. If an interface option with SRAM or POWERLINK has been installed, the service life is 2½ years.
2) Maintenance Controller Extended.
3) The SuperSpeed transfer rate (5 Gbit/s) is only possible with USB 3.0.
4) The PCI and PCIe slots available depend on the bus unit being used (5AC901.BX05-00, 5AC901.BX05-01, 5AC901.BX05-02 or 5AC901.BX05-03).
5) This UPS module can only be operated in the IF option 1 slot.
6) EN 60950 requirements must be observed, see section "+24 VDC power supply" in the user's manual.

7) Maximum current consumption (24 V / 130 W). This can vary depending on the configuration (see "Power calculation" section). The inrush current must also be taken into consideration when selecting the power supply.
8) Only when all interface covers and the front cover are closed.
9) Detailed information can be found in the temperature tables in the user's manual.
10) Maximum values unless specified otherwise by another individual component. Vibration testing is performed in accordance with EN 60068-2-6. Shock testing is performed in accordance with EN 60068-2-27.
11) The maximum ambient temperature is typically derated by 1°C per 1000 meters (starting at 500 meters above sea level).
12) There may be visible deviations in the color and surface appearance depending on the process or batch.

3.1.3.4 Dimensions

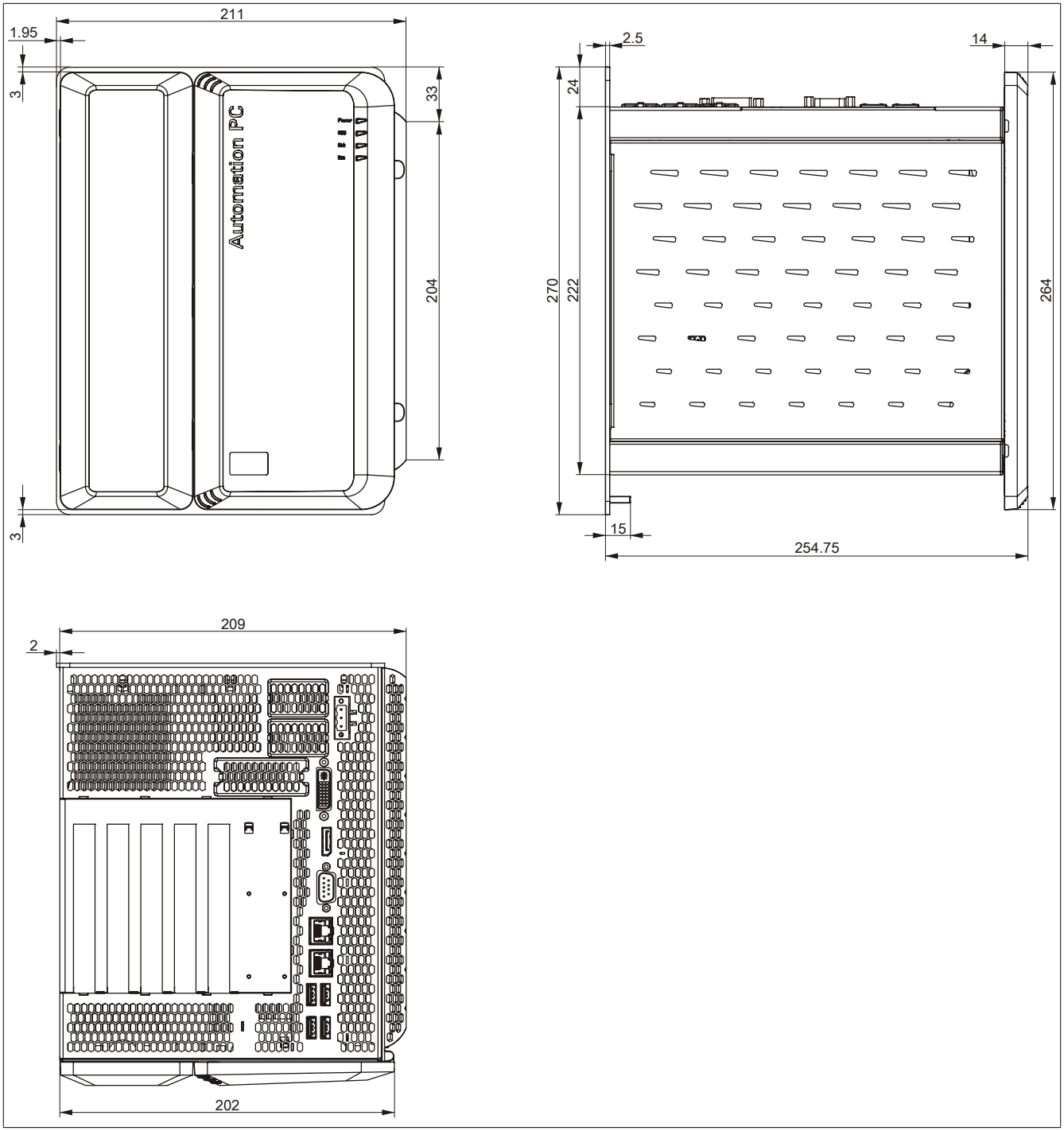

Figure 29: 5PC910.SX05-00 - Dimensions

3.1.3.5 Drilling template

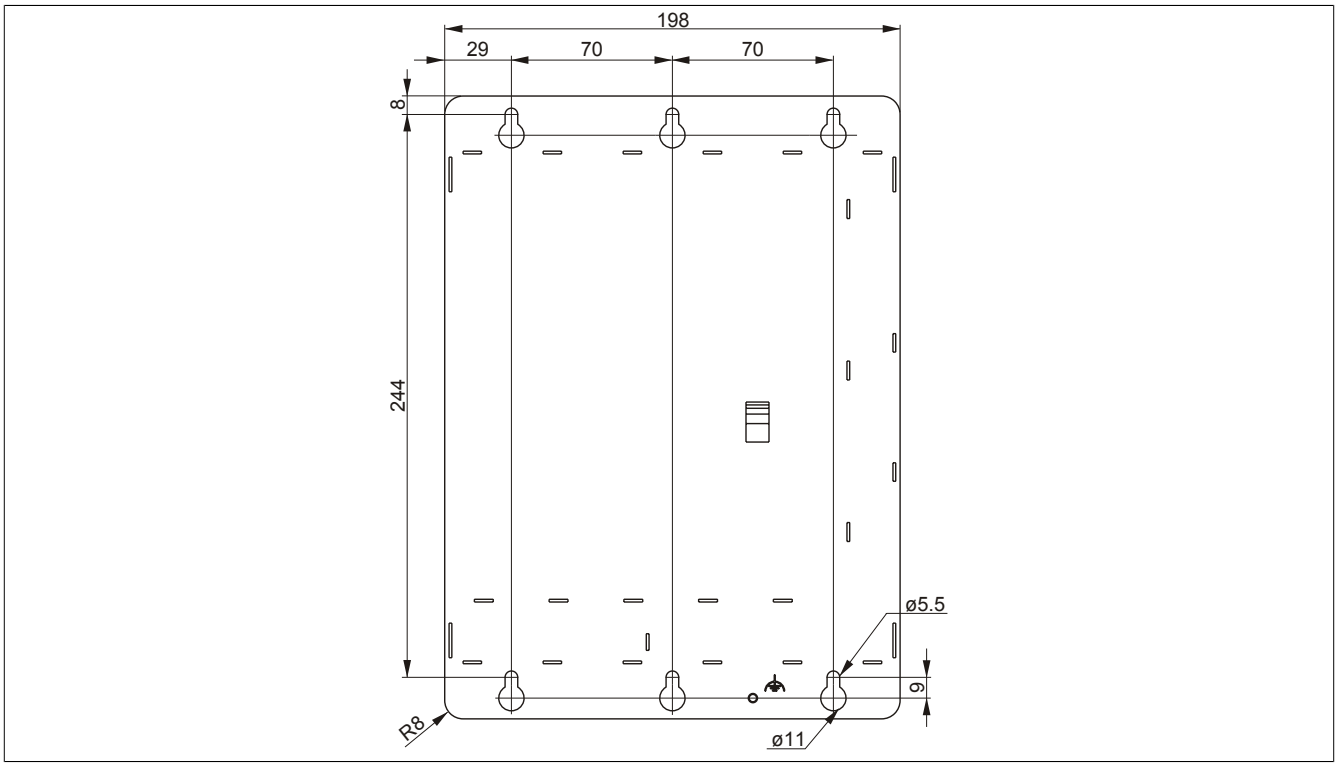

Figure 30: 5PC910.SX05-00 - Drilling template

3.2 QM77 CPU boards

3.2.1 5PC900.TS77-0x

3.2.1.1 General information

- Intel Core i-series processors
- Intel QM77 chipset
- 2x DDR3 memory slots
- Intel HD Graphics 4000
- AMI BIOS (UEFI)

Information:

A fan kit is required when using the 5PC900.TS77-00 CPU board.

3.2.1.2 Order data

Model number	Short description	Figure
	CPU boards	
5PC900.TS77-00	CPU board Intel Core i7 3615QE 2.3 GHz - Quad core - QM77 chipset - For APC910	
5PC900.TS77-01	CPU board Intel Core i7 3612QE 2.1 GHz - Quad core - QM77 chipset - For APC910	
5PC900.TS77-02	CPU board Intel Core i7 3555LE 2.5 GHz - Dual core - QM77 chipset - For APC910	
5PC900.TS77-03	CPU board Intel Core i7 3517UE 1.7 GHz - Dual core - QM77 chipset - For APC910	
5PC900.TS77-04	CPU board Intel Core i5 3610ME 2.7 GHz - Dual core - QM77 chipset - For APC910	
5PC900.TS77-05	CPU board Intel Core i3 3120ME 2.4 GHz - Dual core - QM77 chipset - For APC910	
5PC900.TS77-06	CPU board Intel Core i3 3217UE 1.6 GHz - Dual core - QM77 chipset - For APC910	
	Required accessories	
	Heat sink	
5AC901.HS00-00	APC910 heat sink, active	
5AC901.HS01-00	APC910 heat sink, passive	
	Main memory	
5MMDDR.1024-03	SO-DIMM DDR3, 1024 MB	
5MMDDR.2048-03	SO-DIMM DDR3, 2048 MB	
5MMDDR.4096-03	SO-DIMM DDR3, 4096 MB	
5MMDDR.8192-03	SO-DIMM DDR3, 8192 MB	

Table 46: 5PC900.TS77-00, 5PC900.TS77-01, 5PC900.TS77-02, 5PC900.TS77-03, 5PC900.TS77-04, 5PC900.TS77-05, 5PC900.TS77-06 - Order data

3.2.1.3 Technical data

Model number	5PC900.TS77-00	5PC900.TS77-01	5PC900.TS77-02	5PC900.TS77-03	5PC900.TS77-04	5PC900.TS77-05	5PC900.TS77-06
General information							
Certification							
CE	Yes						
UL	cULus E115267 Industrial Control Equipment						
DNV GL	Temperature: **B** (0 - 55°C) Humidity: **B** (up to 100%) Vibration: **A** (0.7g) EMC: **B** (Bridge and open deck)[1]	-	-	-	Temperature: **B** (0 - 55°C) Humidity: **B** (up to 100%) Vibration: **A** (0.7g) EMC: **B** (Bridge and open deck)[1]	-	-
GOST-R	Yes						
Controller							
Boot loader	Embedded AMI BIOS						
Processor							
Type	Intel Core i7-3615QE	Intel Core i7-3612QE	Intel Core i7-3555LE	Intel Core i7-3517UE	Intel Core i5-3610ME	Intel Core i3-3120ME	Intel Core i3-3217UE
Clock frequency	2300 MHz	2100 MHz	2500 MHz	1700 MHz	2700 MHz	2400 MHz	1600 MHz
Number of cores	4	4	2	2	2	2	2
Architecture	22 nm						
Intel Smart Cache	6 MB	6 MB	4 MB	4 MB	3 MB	3 MB	3 MB
External bus	DMI, 5 GT/s						
Intel 64 architecture	Yes						
Intel Turbo Boost Technology	2.0	2.0	2.0	2.0	2.0	No	No
Intel Hyper-Threading Technology	Yes						
Intel Virtualization Technology (VT-x)	Yes						
Enhanced Intel SpeedStep Technology	Yes						
Chipset	Intel QM77						
Real-time clock							
Precision	At 25°C: typ. 12 ppm (1 second) per day [2]						
Battery-backed	Yes						
Memory slot							
Number of memory channels	2						
Type	DDR3						
Memory size	Max. 16 GB						
Max. memory bandwidth	25.6 GB/s						
Graphics							
Controller	Intel HD Graphics 4000						
Max. dynamic graphics frequency	1 GHz	1 GHz	1 GHz	1 GHz	950 MHz	900 MHz	900 MHz
Color depth	Max. 32-bit						
Resolution							
DVI	Resolution up to 1920 x 1200 (WUXGA)						
RGB	350 MHz RAMDAC, resolution up to 2048 x 1536 @ 75 Hz (QXGA)						
DisplayPort	Version 1.1						
Mass memory management	4x SATA						
Power management	ACPI 4.0 with battery support						

Table 47: 5PC900.TS77-00, 5PC900.TS77-01, 5PC900.TS77-02, 5PC900.TS77-03, 5PC900.TS77-04, 5PC900.TS77-05, 5PC900.TS77-06 - Technical data

1) Yes, although applies only if all components installed within the complete system have this certification.
2) At max. specified ambient temperature: typ. 58 ppm (5 seconds) - worst-case 220 ppm (19 seconds).

3.3 HM76 CPU boards

3.3.1 5PC900.TS77-0x

3.3.1.1 General information

- Intel Celeron processors
- Intel HM76 chipset
- 2x DDR3 memory slots
- Intel HD Graphics 2000/2500
- AMI BIOS (UEFI)

3.3.1.2 Order data

Model number	Short description	Figure
	CPU boards	
5PC900.TS77-07	CPU board Intel Celeron 847E 1.1 GHz - Dual core - HM76 chipset - For APC910	
5PC900.TS77-08	CPU board Intel Celeron 827E 1.4 GHz - Single core - HM76 chipset - For APC910	
5PC900.TS77-09	CPU board Intel Celeron 1020E 2.2 GHz - Dual core - HM76 chipset - For APC910	
5PC900.TS77-10	CPU board Intel Celeron 1047UE 1.4 GHz - Dual core - HM76 chipset - For APC910	
	Required accessories	
	Heat sink	
5AC901.HS00-00	APC910 heat sink, active	
5AC901.HS01-00	APC910 heat sink, passive	
	Main memory	
5MMDDR.1024-03	SO-DIMM DDR3, 1024 MB	
5MMDDR.2048-03	SO-DIMM DDR3, 2048 MB	
5MMDDR.4096-03	SO-DIMM DDR3, 4096 MB	
5MMDDR.8192-03	SO-DIMM DDR3, 8192 MB	

Table 48: 5PC900.TS77-07, 5PC900.TS77-08, 5PC900.TS77-09, 5PC900.TS77-10 - Order data

3.3.1.3 Technical data

Model number	5PC900.TS77-07	5PC900.TS77-08	5PC900.TS77-09	5PC900.TS77-10
General information				
Certification				
CE	Yes			
UL	cULus E115267 Industrial Control Equipment			
DNV GL	-	-	-	Temperature: **B** (0 - 55°C) Humidity: **B** (up to 100%) Vibration: **A** (0.7g) EMC: **B** (Bridge and open deck)[1]
GOST-R	Yes			
Controller				
Boot loader	Embedded AMI BIOS			
Processor				
Type	Intel Celeron 847E	Intel Celeron 827E	Intel Celeron 1020E	Intel Celeron 1047UE
Clock frequency	1100 MHz	1400 MHz	2200 MHz	1400 MHz
Number of cores	2	1	2	2
Architecture	32 nm	32 nm	22 nm	22 nm
Intel Smart Cache	2 MB	1.5 MB	2 MB	2 MB
External bus	DMI, 5 GT/s			
Intel 64 architecture	Yes			
Intel Turbo Boost Technology	No			
Intel Hyper-Threading Technology	No			
Intel Virtualization Technology (VT-x)	Yes			
Enhanced Intel SpeedStep Technology	Yes			
Chipset	Intel HM76			
Real-time clock				
Precision	At 25°C: typ. 12 ppm (1 second) per day [2]			
Battery-backed	Yes			

Table 49: 5PC900.TS77-07, 5PC900.TS77-08, 5PC900.TS77-09, 5PC900.TS77-10 - Technical data

Model number	5PC900.TS77-07	5PC900.TS77-08	5PC900.TS77-09	5PC900.TS77-10
Memory slot				
Number of memory channels	2			
Type	DDR3			
Memory size	Max. 16 GB			
Max. memory bandwidth	21.3 GB/s	21.3 GB/s	25.6 GB/s	25.6 GB/s
Graphics				
Controller	Intel HD Graphics 2000	Intel HD Graphics 2000	Intel HD Graphics 2500	Intel HD Graphics 2500
Max. dynamic graphics frequency	800 MHz	800 MHz	1 GHz	900 MHz
Color depth	Max. 32-bit			
Resolution				
DVI	Resolution up to 1920 x 1200 (WUXGA)			
RGB	350 MHz RAMDAC, resolution up to 2048 x 1536 @ 75 Hz (QXGA)			
DisplayPort	Version 1.1			
Mass memory management	4x SATA			
Power management	ACPI 4.0 with battery support			

Table 49: 5PC900.TS77-07, 5PC900.TS77-08, 5PC900.TS77-09, 5PC900.TS77-10 - Technical data

1) Yes, although applies only if all components installed within the complete system have this certification.
2) At max. specified ambient temperature: typ. 58 ppm (5 seconds) - worst-case 220 ppm (19 seconds).

3.4 Main memory

3.4.1 5MMDDR.xxxx-03

3.4.1.1 General information

These 204-pin DDR3 main memory modules operate at 1600 MHz and range in size from 1 GB to 8 GB.

If two RAM modules with the same size (e.g. 2 GB) are inserted into the CPU board, then dual-channel memory technology is supported. This technology is not supported if two RAM modules of different sizes (e.g. 2 GB and 4 GB) are inserted.

If two 2 GB modules or one 4 GB module is installed on a 32-bit operating system, only 3 GB of main memory can be used. On a 64-bit operating system, up to 16 GB of main memory can be used.

3.4.1.2 Order data

Model number	Short description	Figure
	Main memory	
5MMDDR.1024-03	SO-DIMM DDR3, 1024 MB	
5MMDDR.2048-03	SO-DIMM DDR3, 2048 MB	
5MMDDR.4096-03	SO-DIMM DDR3, 4096 MB	
5MMDDR.8192-03	SO-DIMM DDR3, 8192 MB	

Table 50: 5MMDDR.1024-03, 5MMDDR.2048-03, 5MMDDR.4096-03, 5MMDDR.8192-03 - Order data

3.4.1.3 Technical data

Model number	5MMDDR.1024-03	5MMDDR.2048-03	5MMDDR.4096-03	5MMDDR.8192-03
General information				
Certification				
CE	Yes			
UL	cULus E115267 Industrial Control Equipment			
HazLoc	cULus HazLoc E180196 Industrial Control Equipment for Hazardous Locations Class I, Division 2, Groups ABCD, T3C[1]			
DNV GL	Temperature: **B** (0 - 55°C) Humidity: **B** (up to 100%) Vibration: **A** (0.7g) EMC: **B** (Bridge and open deck)[2]			
GOST-R	Yes			
Controller				
Memory				
Type	SO-DIMM DDR3 SDRAM			
Memory size	1 GB	2 GB	4 GB	8 GB
Construction	204-pin			
Organization	128M x 64-bit	256M x 64-bit	512M x 64-bit	1024M x 64 bits
Speed	DDR3-1600 (PC3-12800)			

Table 51: 5MMDDR.1024-03, 5MMDDR.2048-03, 5MMDDR.4096-03, 5MMDDR.8192-03 - Technical data

1) Yes, although applies only if all components installed within the complete system have this certification and the complete system itself carries the corresponding mark.
2) Yes, although applies only if all components installed within the complete system have this certification.

Information:

A main memory module can only be replaced at B&R.

3.5 Bus units

3.5.1 5AC901.BX0x-0x

3.5.1.1 General information

These bus units are compatible with system units that support PCI and/or PCI Express.

1-slot bus units

Figure 31: 1-slot bus units

2-slot bus units

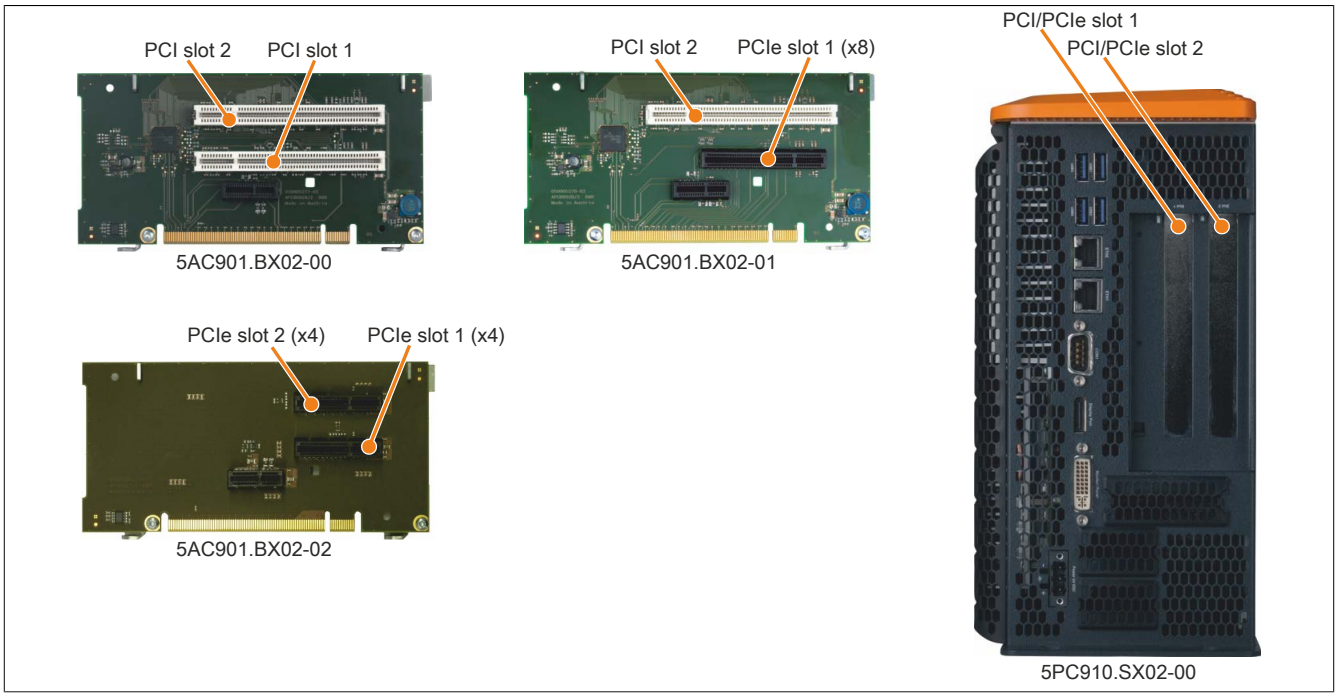

Figure 32: 2-slot bus units

5-slot bus units

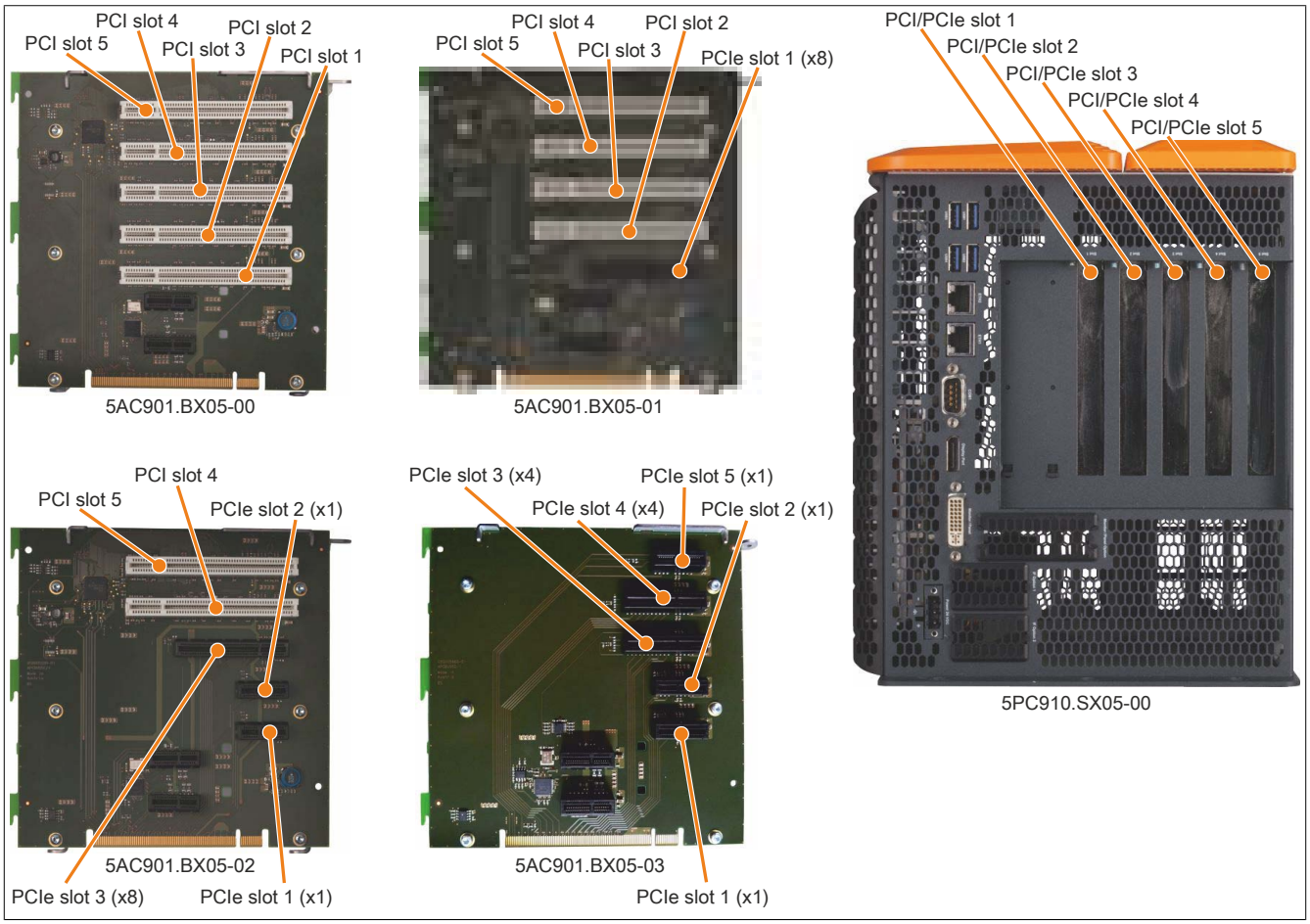

Figure 33: 5-slot bus units

3.5.1.2 Order data

Model number	Short description	Figure
	Bus units	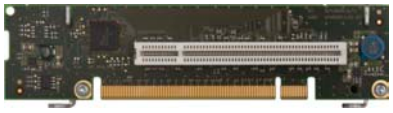
5AC901.BX01-00	APC910 1-slot bus - 1 PCI	
5AC901.BX01-01	APC910 1-slot bus - 1 PCI Express x8	
5AC901.BX02-00	APC910 2-slot bus - 2 PCI	
5AC901.BX02-01	APC910 2-slot bus - 1 PCI - 1 PCI Express x8	
5AC901.BX02-02 ≤ Rev. C0	APC910 2-slot bus - 2 PCI Express x4	
5AC901.BX02-02 ≥ Rev. D0	APC910 2-slot bus - 2 PCI Express x4, open-ended	
5AC901.BX05-00	APC910 5-slot bus - 5 PCI	
5AC901.BX05-01	APC910 5-slot bus - 4 PCI - 1 PCI Express x8	
5AC901.BX05-02	APC910 5-slot bus - 2 PCI - 1 PCI Express x8 - 2 PCI Express x1	
5AC901.BX05-03	APC910 5-slot bus - 2 PCI Express x4 - 3 PCI Express x1	

Table 52: 5AC901.BX01-00, 5AC901.BX01-01, 5AC901.BX02-00, 5AC901.BX02-01, 5AC901.BX02-02, 5AC901.BX05-00, 5AC901.BX05-01, 5AC901.BX05-02, 5AC901.BX05-03 - Order data

3.5.1.3 Technical data

Information:

Up to revision A0, the PCI Express slots on 5AC901.BX01-01 and 5AC901.BX02-01 bus units are equipped with the PCIe x4 standard.

Model number	5AC901.BX01-00	5AC901.BX01-01	5AC901.BX02-00	5AC901.BX02-01	5AC901.BX02-02
General information					
Certification					
CE	Yes				
UL	cULus E115267 Industrial Control Equipment				
DNV GL	Temperature: **B** (0 - 55°C) Humidity: **B** (up to 100%) Vibration: **A** (0.7g) EMC: **B** (Bridge and open deck)[1]				
GOST-R	Yes				
Inserts					
PCI slots					
Quantity	1	-	2	1	-
Type	32-bit	-	32-bit	32-bit	-
Design	PCI half-size	-	PCI half-size	PCI half-size	-
Standard	2.2	-	2.2	2.2	-
Bus speed	33 MHz	-	33 MHz	33 MHz	-
PCIe to PCI bridge	Yes	-	Yes	Yes	-
PCIe slots					
Quantity	-	1	-	1	2
Design	-	PCIe half-size	-	PCIe half-size	PCIe half-size
Standard	-	2.0	-	2.0	2.0
Bus speed	-	x8 (4 GB/s)	-	x8 (4 GB/s)	x4 (2 GB/s) (2x)

Table 53: 5AC901.BX01-00, 5AC901.BX01-01, 5AC901.BX02-00, 5AC901.BX02-01, 5AC901.BX02-02 - Technical data

1) Yes, although applies only if all components installed within the complete system have this certification.

Model number	5AC901.BX05-00	5AC901.BX05-01	5AC901.BX05-02	5AC901.BX05-03
General information				
Certification				
CE	Yes			
UL	cULus E115267 Industrial Control Equipment			
GOST-R	Yes			
Inserts				
PCI slots				
Quantity	5	4	2	-
Type	32-bit	32-bit	32-bit	-
Design	PCI half-size	PCI half-size	PCI half-size	-
Standard	2.2	2.2	2.2	-
Bus speed	33 MHz	33 MHz	33 MHz	-
PCIe to PCI bridge	Yes	Yes	Yes	-
PCIe slots				
Quantity	-	1	3	5
Design	-	PCIe half-size	PCIe half-size	PCIe half-size
Standard	-	2.0	2.0	2.0
Bus speed	-	x8 (4 GB/s)	x8 (4 GB/s) (1x); x1 (500 MB/s) (2x)	x4 (2 GB/s) (2x); x1 (500 MB/s) (3x)

Table 54: 5AC901.BX05-00, 5AC901.BX05-01, 5AC901.BX05-02, 5AC901.BX05-03 - Technical data

Information:

By default, PCIe slots are limited to Gen1 in BIOS. However, this PCIe Gen setting can be changed in BIOS (Advanced - PCI Express configuration - PCI Express GEN 2 settings).

3.6 Heat sinks

3.6.1 5AC901.HS0x-00

3.6.1.1 General information

The 5AC901.HS00-00 heat sink has cooling fins and heat pipes for improved heat dissipation. It is only used together with system units that have fan kits.

The 5AC901.HS01-00 heat sink has cooling fins and heat pipes for improved heat dissipation. It is only used together with system units that do not have fan kits.

3.6.1.2 Order data

Model number	Short description	Figure
	Heat sink	
5AC901.HS00-00	APC910 heat sink, active	
5AC901.HS01-00	APC910 heat sink, passive	
	Required accessories	
	CPU boards	
5PC900.TS77-00	CPU board Intel Core i7 3615QE 2.3 GHz - Quad core - QM77 chipset - For APC910	
5PC900.TS77-01	CPU board Intel Core i7 3612QE 2.1 GHz - Quad core - QM77 chipset - For APC910	
5PC900.TS77-02	CPU board Intel Core i7 3555LE 2.5 GHz - Dual core - QM77 chipset - For APC910	
5PC900.TS77-03	CPU board Intel Core i7 3517UE 1.7 GHz - Dual core - QM77 chipset - For APC910	
5PC900.TS77-04	CPU board Intel Core i5 3610ME 2.7 GHz - Dual core - QM77 chipset - For APC910	
5PC900.TS77-05	CPU board Intel Core i3 3120ME 2.4 GHz - Dual core - QM77 chipset - For APC910	
5PC900.TS77-06	CPU board Intel Core i3 3217UE 1.6 GHz - Dual core - QM77 chipset - For APC910	
5PC900.TS77-07	CPU board Intel Celeron 847E 1.1 GHz - Dual core - HM76 chipset - For APC910	
5PC900.TS77-08	CPU board Intel Celeron 827E 1.4 GHz - Single core - HM76 chipset - For APC910	
5PC900.TS77-09	CPU board Intel Celeron 1020E 2.2 GHz - Dual core - HM76 chipset - For APC910	
5PC900.TS77-10	CPU board Intel Celeron 1047UE 1.4 GHz - Dual core - HM76 chipset - For APC910	

Table 55: 5AC901.HS00-00, 5AC901.HS01-00 - Order data

3.7 Fan kits

Information:

Fan kits are subject to wear and must be checked at appropriate intervals and cleaned or replaced when not functioning properly (e.g. due to dirt and grime). For information about replacing fan filters, please refer to the section "Replacing fan filters" on page 395.

Information:

For information about installing or replacing a fan kit, please refer to the section "Replacing fan kits" on page 396.

3.7.1 5AC901.FA01-00

3.7.1.1 General information

This fan kit includes 3 fans for improving heat dissipation on 1-slot APC910 system units.

- 3 fans for improved heat dissipation
- Simple installation and removal

3.7.1.2 Order data

Model number	Short description	Figure
	Fan kit	
5AC901.FA01-00	APC910 fan kit - For 5PC910.SX01-00	
	Optional accessories	
	Accessories	
5AC901.FI01-00	APC910 air filter - For 1-slot APC910 - 1 pieces	

Table 56: 5AC901.FA01-00 - Order data

3.7.1.3 Technical data

Model number	5AC901.FA01-00
General information	
Number of fans	3 (1x 50x50x15, 2x 70x70x15)
Speed	Max. 5000 ±10% rpm (50x50x15) Max. 2200 ±250 rpm (70x70x15)
Noise level	33.5 dB(A) (50x50x15) 28.3 dB(A) (70x70x15)
Service life	100,000 hours at 40°C (50x50x15) 100,000 hours at 40°C (70x70x15)
Certification	
CE	Yes
UL	cULus E115267 Industrial Control Equipment
DNV GL	Temperature: **B** (0 - 55°C) Humidity: **B** (up to 100%) Vibration: **A** (0.7g) EMC: **B** (Bridge and open deck)[1]
GOST-R	Yes
Mechanical characteristics	
Dimensions	
Fan	
Width	50 mm 70 mm
Height	50 mm 70 mm
Depth	15 mm 15 mm

Table 57: 5AC901.FA01-00 - Technical data

1) Yes, although applies only if all components installed within the complete system have this certification.

3.7.2 5AC901.FA02-00

3.7.2.1 General information

This fan kit includes 4 fans for improving heat dissipation on 2-slot APC910 system units.

- 4 fans for improved heat dissipation
- Simple installation and removal

3.7.2.2 Order data

Model number	Short description	Figure
	Fan kit	
5AC901.FA02-00	APC910 fan kit - For 5PC910.SX02-00	
	Optional accessories	
	Accessories	
5AC901.FI02-00	APC910 air filter - For 2-slot APC910 - 1 pieces	

Table 58: 5AC901.FA02-00 - Order data

3.7.2.3 Technical data

Model number	5AC901.FA02-00
General information	
Number of fans	4 (3x 50x50x15, 1x 70x70x15)
Speed	Max. 5000 ±10% rpm (50x50x15) Max. 2200 ±250 rpm (70x70x15)
Noise level	33.5 dB(A) (50x50x15) 28.3 dB(A) (70x70x15)
Service life	100,000 hours at 40°C (50x50x15) 100,000 hours at 40°C (70x70x15)
Certification	
CE	Yes
UL	cULus E115267 Industrial Control Equipment
DNV GL	Temperature: **B** (0 - 55°C) Humidity: **B** (up to 100%) Vibration: **A** (0.7g) EMC: **B** (Bridge and open deck)[1)]
GOST-R	Yes
Mechanical characteristics	
Dimensions	
Fan	
Width	50 mm 70 mm
Height	50 mm 70 mm
Depth	15 mm 15 mm

Table 59: 5AC901.FA02-00 - Technical data

1) Yes, although applies only if all components installed within the complete system have this certification.

3.7.3 5AC901.FA05-00

3.7.3.1 General information

This fan kit includes 4 fans for improving heat dissipation on 5-slot APC910 system units.

- 4 fans for improved heat dissipation
- Simple installation and removal

3.7.3.2 Order data

Model number	Short description	Figure
	Fan kit	
5AC901.FA05-00	APC910 fan kit - For 5PC910.SX05-00 system unit	
	Optional accessories	
	Accessories	
5AC901.FI05-00	APC910 air filter - For 5-slot APC910 - 1 pieces	

Table 60: 5AC901.FA05-00 - Order data

3.7.3.3 Technical data

Model number	5AC901.FA05-00
General information	
Number of fans	4 (1x 50x50x15, 3x 70x70x15)
Speed	Max. 5000 ±10% rpm (50x50x15) Max. 2200 ±250 rpm (70x70x15)
Noise level	33.5 dB(A) (50x50x15) 28.3 dB(A) (70x70x15)
Service life	100,000 hours at 40°C (50x50x15) 100,000 hours at 40°C (70x70x15)
Certification	
CE	Yes
UL	cULus E115267 Industrial Control Equipment
GOST-R	Yes
Mechanical characteristics	
Dimensions	
Fan	
Width	50 mm 70 mm
Height	50 mm 70 mm
Depth	15 mm 15 mm

Table 61: 5AC901.FA05-00 - Technical data

3.8 Drives

3.8.1 5AC901.CHDD-00

3.8.1.1 General information

This 250 GB slide-in compact hard disk is specified for 24-hour operation and can be used in APC910 system units.

- 250 GB hard disk
- Slide-in compact
- Specified for 24-hour operation
- S.M.A.R.T. support

3.8.1.2 Order data

Model number	Short description	Figure
	Drives	
5AC901.CHDD-00	250 GB hard disk - Slide-in compact - SATA	

Table 62: 5AC901.CHDD-00 - Order data

3.8.1.3 Technical data

Information:

The following characteristics, features and limit values only apply to this accessory and can deviate from those specified for the complete system. The data specifications for the complete system take precedence over those of individual components.

Model number	5AC901.CHDD-00
General information	
Certification	
CE	Yes
UL	cULus E115267 Industrial Control Equipment
HazLoc	cULus HazLoc E180196 Industrial Control Equipment for Hazardous Locations Class I, Division 2, Groups ABCD, T3C[1)]
GOST-R	Yes
Hard disk drive	
Capacity	250 GB
Number of heads	2
Number of sectors	488397168
Bytes per sector	512
Cache	8 MB
Speed	5400 rpm ±0.2%
Startup time	Typ. 3.6 s (from 0 rpm to read access)
MTBF	550,000 POH [2)]
S.M.A.R.T. support	Yes
Interface	SATA
Access time	5.6 ms
Supported transfer modes	SATA 1.0, serial ATA revision 2.6 PIO mode 0-4, multiword DMA mode 0-2, UDMA mode 0-6
Data transfer rate	
Internal	Max. 1175 Mbit/s
To/From host	Max. 150 Mbit/s (SATA I), max. 300 Mbit/s (SATA II)
Positioning time	
Minimum (track to track)	1 ms
Nominal (read only)	14 ms
Maximum (read only)	30 ms

Table 63: 5AC901.CHDD-00 - Technical data

Model number	5AC901.CHDD-00
Environmental conditions	
Temperature [3]	
Operation [4]	0 to 60°C
24-hour operation [5]	0 to 60°C
Storage	-40 to 70°C
Transport	-40 to 70°C
Relative humidity [6]	
Operation	5 to 95%, non-condensing
Storage	5 to 95%, non-condensing
Transport	5 to 95%, non-condensing
Vibration	
Operation (continuous)	5 to 500 Hz: 0.25 g, no unrecoverable errors
Operation (occasional)	5 to 500 Hz: 0.5 g, no unrecoverable errors
Storage	10 to 500 Hz: 5 g, no unrecoverable errors
Transport	10 to 500 Hz: 5 g, no unrecoverable errors
Shock	
Operation	350 g and 2 ms duration, no unrecoverable errors
Storage	800 g and 2 ms duration, no unrecoverable errors 800 g and 1 ms duration, no unrecoverable errors 600 g and 0.5 ms duration, no unrecoverable errors
Transport	800 g and 2 ms duration, no unrecoverable errors 800 g and 1 ms duration, no unrecoverable errors 600 g and 0.5 ms duration, no unrecoverable errors
Elevation	
Operation	-300 to 3048 m
Storage	-300 to 12192 m
Mechanical characteristics	
Installation	Fixed [7]
Dimensions	
Width	13 mm
Height	75 mm
Depth	105 mm
Weight	134 g
Manufacturer information	
Manufacturer	Seagate
Manufacturer's product ID	ST9250311CS

Table 63: 5AC901.CHDD-00 - Technical data

1) Yes, although applies only if all components installed within the complete system have this certification and the complete system itself carries the corresponding mark.
2) With 8760 POH (power-on hours) per year and 25°C surface temperature.
3) Temperature values at an elevation of 305 meters. The temperature specification must be reduced linearly by 1°C every 305 meters. The temperature is permitted to increase or decrease by a maximum of 20°C per hour.
4) Standard operation refers to 333 POH (power-on hours) per month.
5) 24-hour operation refers to 732 POH (power-on hours) per month.
6) Humidity gradient: Maximum 30% per hour.
7) Slide-in compact installation.

3.8.1.4 Temperature/Humidity diagram

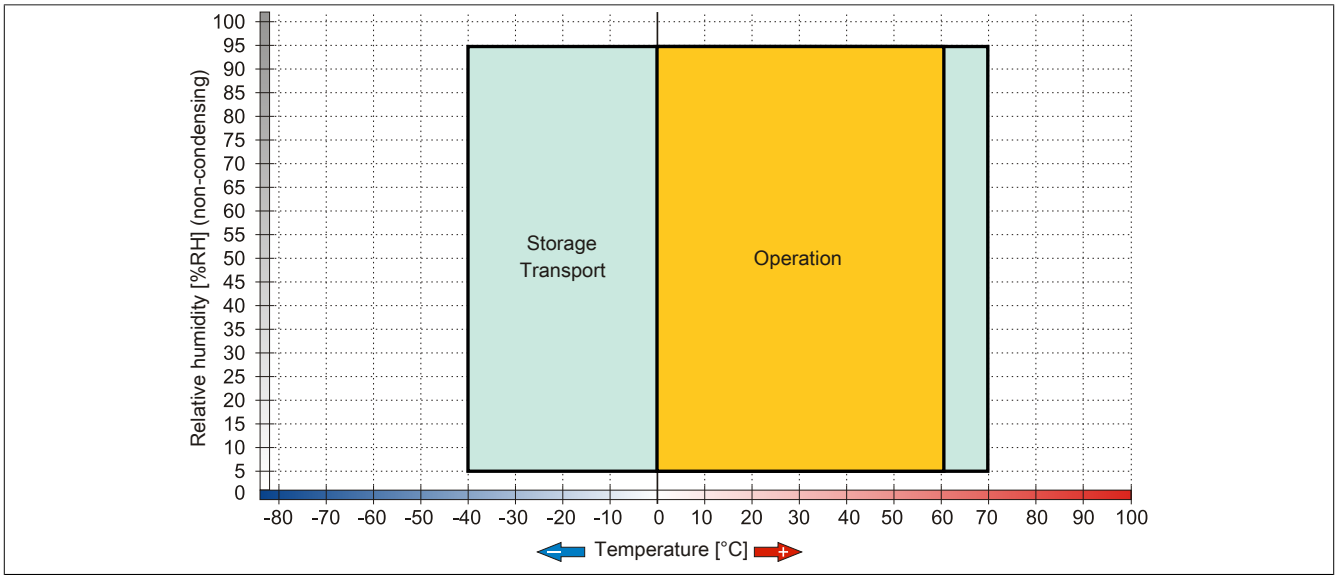

Figure 34: 5AC901.CHDD-00 - Temperature/Humidity diagram

3.8.2 5AC901.CHDD-01

3.8.2.1 General information

This 500 GB slide-in compact hard disk is specified for 24-hour operation and can be used in APC910 and PPC900 system units.

- 500 GB hard disk
- Slide-in compact
- Specified for 24-hour operation
- S.M.A.R.T. support

3.8.2.2 Order data

Model number	Short description	Figure
	Drives	
5AC901.CHDD-01	500 GB hard disk - Slide-in compact - SATA	
	Optional accessories	
	Drives	
5MMHDD.0500-00	500 GB hard disk - SATA	

Table 64: 5AC901.CHDD-01 - Order data

3.8.2.3 Technical data

Information:

The following characteristics, features and limit values only apply to this accessory and can deviate from those specified for the complete system. The data specifications for the complete system take precedence over those of individual components.

Model number	5AC901.CHDD-01
General information	
Certification	
CE	Yes
UL	cULus E115267 Industrial Control Equipment
HazLoc	cULus HazLoc E180196 Industrial Control Equipment for Hazardous Locations Class I, Division 2, Groups ABCD, T3C[1)]
GOST-R	Yes
Hard disk drive	
Capacity	500 GB
Number of heads	2
Number of sectors	976,773,168
Bytes per sector	512 (logical) / 4096 (physical)
Cache	16 MB
Speed	5400 rpm ±0.2%
Startup time	Typ. 3.5 s (from 0 rpm to read access)
Service life	5 years
MTBF	1,000,000 POH [2)]
S.M.A.R.T. support	Yes
Interface	SATA
Access time	5.5 ms
Supported transfer modes	SATA II
Data transfer rate	
Internal	Max. 147 MB/s
To/From host	Max. 150 Mbit/s (SATA I), max. 300 Mbit/s (SATA II)
Positioning time	
Nominal (read only)	11 ms
Maximum (read only)	21 ms
Environmental conditions	
Temperature [3)]	
Operation [4)]	0 to 60°C
24-hour operation [5)]	0 to 60°C
Storage	-40 to 70°C
Transport	-40 to 70°C

Table 65: 5AC901.CHDD-01 - Technical data

Model number	5AC901.CHDD-01
Relative humidity [6]	
Operation	8 to 90%, non-condensing
Storage	5 to 95%, non-condensing
Transport	5 to 95%, non-condensing
Vibration	
Operation (continuous)	5 to 500 Hz: 0.25 g, no unrecoverable errors
Operation (occasional)	5 to 500 Hz: 0.5 g, no unrecoverable errors
Storage	10 to 500 Hz: 5 g, no unrecoverable errors
Transport	10 to 500 Hz: 5 g, no unrecoverable errors
Shock	
Operation	400 g and 2 ms duration, no unrecoverable errors
Storage	1000 g and 2 ms duration, no unrecoverable errors
Transport	1000 g and 2 ms duration, no unrecoverable errors
Elevation	
Operation	-305 to 3048 m
Storage	-305 to 12192 m
Mechanical characteristics	
Installation	Fixed [7]
Dimensions	
Width	10 mm
Height	75 mm
Depth	105 mm
Weight	134 g
Manufacturer information	
Manufacturer	Western Digital
Manufacturer's product ID	WD5000LUCT

Table 65: 5AC901.CHDD-01 - Technical data

1) Yes, although applies only if all components installed within the complete system have this certification and the complete system itself carries the corresponding mark.
2) With 8760 POH (power-on hours) per year and 25°C surface temperature.
3) Temperature values at an elevation of 305 meters. The temperature specification must be reduced linearly by 1°C every 305 meters. The temperature is permitted to increase or decrease by a maximum of 20°C per hour.
4) Standard operation refers to 333 POH (power-on hours) per month.
5) 24-hour operation refers to 732 POH (power-on hours) per month.
6) Humidity gradient: Maximum 20% per hour.
7) Slide-in compact installation.

3.8.2.4 Temperature/Humidity diagram

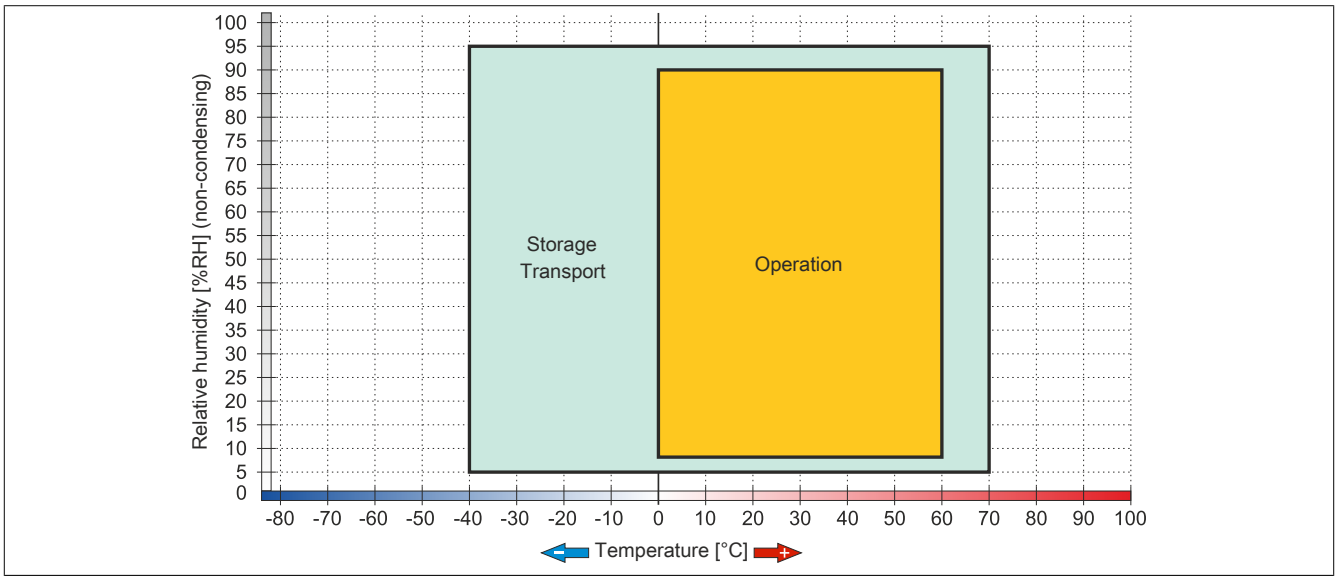

Figure 35: 5AC901.CHDD-01 - Temperature/Humidity diagram

3.8.3 5MMHDD.0500-00

3.8.3.1 General information

This 500 GB hard disk can be used as a replacement part or accessory.

- 500 GB hard disk
- Replacement hard disk for a 5AC801.HDDI-04 / 5AC901.CHDD-01 hard disk or a 5ACPCI.RAIC-05 RAID controller
- Accessory for the APC510 (optional hard disk for I/O board)
- Specified for 24-hour operation
- S.M.A.R.T. support

Information:

A drive can only be installed or replaced at B&R.

3.8.3.2 Order data

Model number	Short description	Figure
	Drives	
5MMHDD.0500-00	500 GB hard disk - SATA	

Table 66: 5MMHDD.0500-00 - Order data

3.8.3.3 Technical data

Caution!

A sudden power failure may result in data loss! In very rare cases, the mass storage device may also become damaged.

To prevent damage and loss of data, the use of a UPS is recommended.

Information:

The following characteristics, features and limit values only apply to this accessory and can deviate from those specified for the complete system. The data specifications for the complete system take precedence over those of individual components.

Model number	5MMHDD.0500-00
General information	
Certification	
CE	Yes
UL	cULus E115267 Industrial Control Equipment
HazLoc	cULus HazLoc E180196 Industrial Control Equipment for Hazardous Locations Class I, Division 2, Groups ABCD[1)]
GOST-R	Yes
Hard disk drive	
Capacity	500 GB
Number of heads	2
Number of sectors	976,773,168
Bytes per sector	512 (logical) / 4096 (physical)
Cache	16 MB

Table 67: 5MMHDD.0500-00 - Technical data

Model number	5MMHDD.0500-00
Speed	5400 rpm ±0.2%
Startup time	Typ. 3.5 s (from 0 rpm to read access)
Service life	5 years
MTBF	1,000,000 POH [2]
S.M.A.R.T. support	Yes
Interface	SATA
Access time	5.5 ms
Supported transfer modes	SATA II
Data transfer rate	
Internal	Max. 147 MB/s
To/From host	Max. 150 Mbit/s (SATA I), max. 300 Mbit/s (SATA II)
Positioning time	
Nominal (read only)	11 ms
Maximum (read only)	21 ms
Environmental conditions	
Temperature [3]	
Operation [4]	0 to 60°C
24-hour operation [5]	0 to 60°C
Storage	-40 to 70°C
Transport	-40 to 70°C
Relative humidity [6]	
Operation	8 to 90%, non-condensing
Storage	5 to 95%, non-condensing
Transport	5 to 95%, non-condensing
Vibration	
Operation (continuous)	5 to 500 Hz: 0.25 g, no unrecoverable errors
Operation (occasional)	5 to 500 Hz: 0.5 g, no unrecoverable errors
Storage	10 to 500 Hz: 5 g, no unrecoverable errors
Transport	10 to 500 Hz: 5 g, no unrecoverable errors
Shock	
Operation	400 g and 2 ms duration, no unrecoverable errors
Storage	1000 g and 2 ms duration, no unrecoverable errors
Transport	1000 g and 2 ms duration, no unrecoverable errors
Elevation	
Operation	-305 to 3048 m
Storage	-305 to 12192 m
Mechanical characteristics	
Dimensions	
Width	7 mm
Height	69 mm
Depth	100 mm
Weight	100 g
Manufacturer information	
Manufacturer	Western Digital
Manufacturer's product ID	WD5000LUCT

Table 67: 5MMHDD.0500-00 - Technical data

1) Yes, although applies only if all components installed within the complete system have this certification and the complete system itself carries the corresponding mark.
2) With 8760 POH (power-on hours) per year and 25°C surface temperature.
3) Temperature values at an elevation of 305 meters. The temperature specification must be reduced linearly by 1°C every 305 meters. The temperature is permitted to increase or decrease by a maximum of 20°C per hour.
4) Standard operation refers to 333 POH (power-on hours) per month.
5) 24-hour operation refers to 732 POH (power-on hours) per month.
6) Humidity gradient: Maximum 20% per hour.

3.8.3.4 Temperature/Humidity diagram

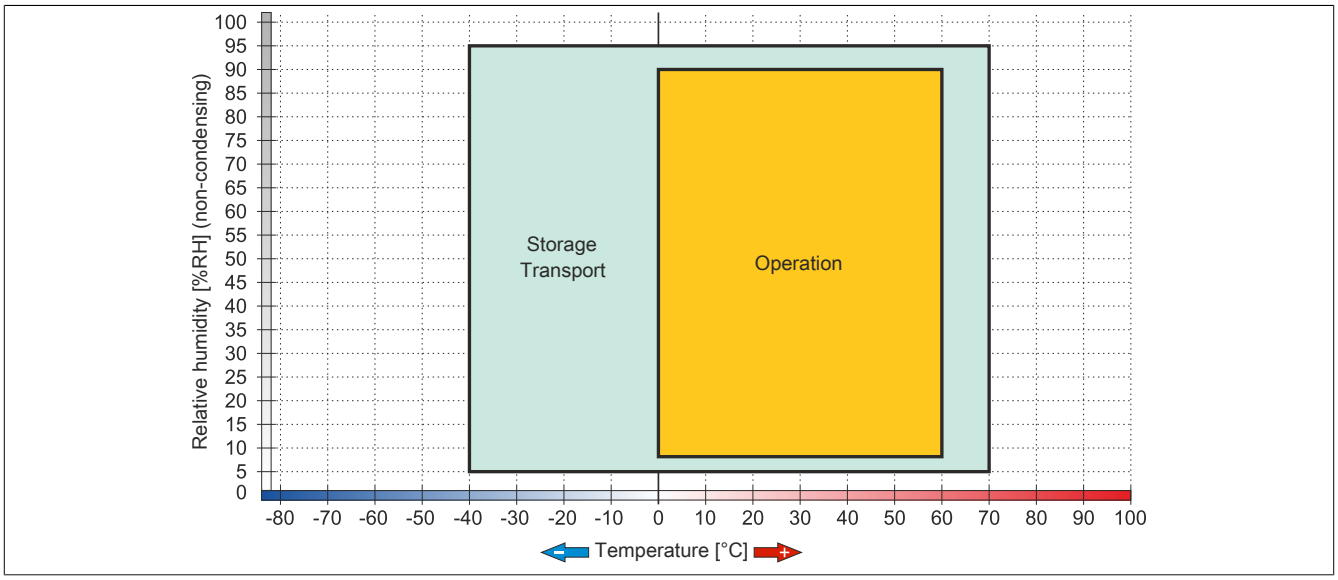

Figure 36: 5MMHDD.0500-00 - Temperature/Humidity diagram

3.8.4 5AC901.CSSD-00

3.8.4.1 General information

This 32 GB slide-in compact solid-state drive (SSD) is based on single-level cell (SLC) technology and is SATA 2.6 compatible. The slide-in compact drive can be used in APC910 system units.

- 32 GB solid-state drive
- SLC flash
- S.M.A.R.T. support
- Slide-in compact
- SATA 2.6 compatible

3.8.4.2 Order data

Model number	Short description	Figure
	Drives	
5AC901.CSSD-00	32 GB SSD SLC - Slide-in compact - SATA	

Table 68: 5AC901.CSSD-00 - Order data

3.8.4.3 Technical data

Caution!

A sudden power failure may result in data loss! In very rare cases, the mass storage device may also become damaged.

To prevent damage and loss of data, the use of a UPS is recommended.

Information:

The following characteristics, features and limit values only apply to this accessory and can deviate from those specified for the complete system. The data specifications for the complete system take precedence over those of individual components.

Model number	5AC901.CSSD-00
General information	
Certification	
CE	Yes
UL	cULus E115267 Industrial Control Equipment
HazLoc	cULus HazLoc E180196 Industrial Control Equipment for Hazardous Locations Class I, Division 2, Groups ABCD, T3C[1)]
GOST-R	Yes
Solid-state drive	
Capacity	32 GB
Data reliability	<1 unrecoverable error in 10^{16} bit read accesses
MTBF	2,000,000 hours
Power on/off cycles	50000
S.M.A.R.T. support	Yes
Interface	SATA
Maintenance	None
Sequential read	Max. 250 MB/s
Sequential write	Max. 195 MB/s
IOPS [2)]	
4k read	45000
4k write	5500
Endurance	
SLC flash	Yes
Guaranteed data volume	
Guaranteed	700 TB
Results for 5 years	350 GB/day
Wear leveling	Static

Table 69: 5AC901.CSSD-00 - Technical data

Model number	5AC901.CSSD-00
Error correction coding (ECC)	Yes
Compatibility	SATA revision 2.6 compatible, compatible with SATA 1.5 Gbit/s and 3 Gbit/s interface rates ATA/ATAPI-7 SSD Enhanced SMART ATA feature set Native Command Queuing (NCQ)
Environmental conditions	
Temperature	
Operation	0 to 70°C
Storage	-55 to 95°C
Transport	-55 to 95°C
Relative humidity	
Operation	5 to 95%, non-condensing
Storage	5 to 95%, non-condensing
Transport	5 to 95%, non-condensing
Vibration	
Operation	5 to 700 Hz: 2.17 g
Storage	5 to 800 Hz: 3.13 g
Transport	5 to 800 Hz: 3.13 g
Shock	
Operation	1500 g, 0.5 ms
Storage	1500 g, 0.5 ms
Transport	1500 g, 0.5 ms
Elevation	
Operation	-300 to 12192 m
Storage	-300 to 12192 m
Transport	-300 to 12192 m
Mechanical characteristics	
Installation	Fixed [3)]
Dimensions	
Width	13 mm
Height	98 mm
Depth	105 mm
Weight	118 g
Manufacturer information	
Manufacturer	Intel
Manufacturer's product ID	SSDSA2SH032G201

Table 69: 5AC901.CSSD-00 - Technical data

1) Yes, although applies only if all components installed within the complete system have this certification and the complete system itself carries the corresponding mark.
2) IOPS: Random read and write input/output operations per second.
3) Slide-in compact installation.

3.8.4.4 Temperature/Humidity diagram

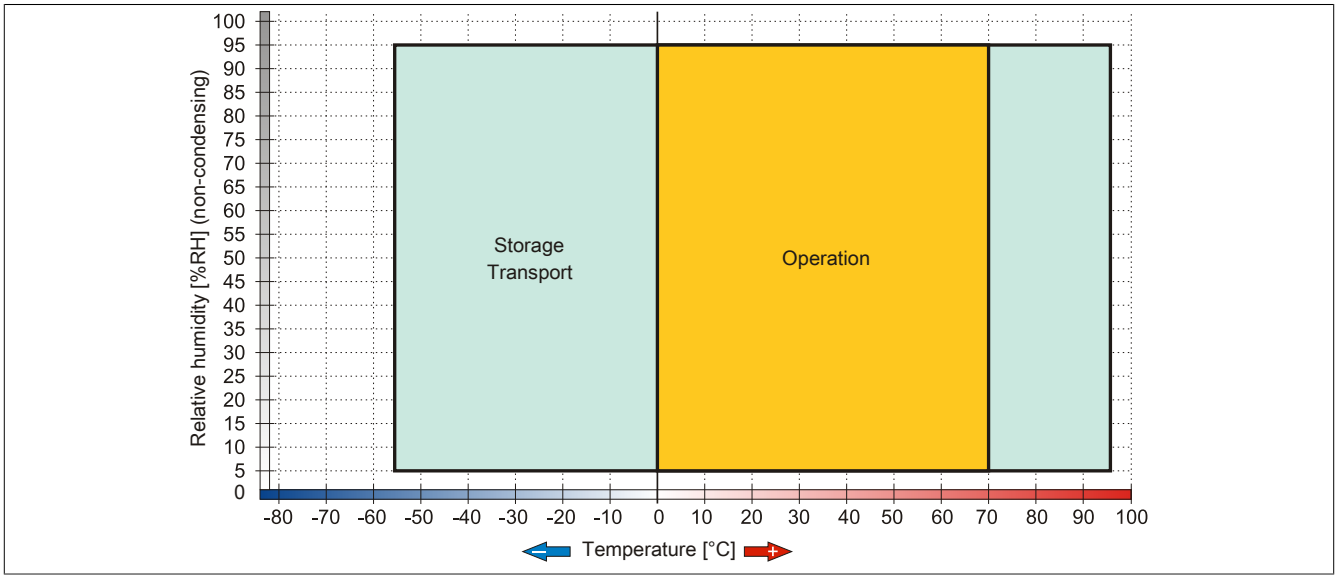

Figure 37: 5AC901.CSSD-00 - Temperature/Humidity diagram

3.8.5 5AC901.CSSD-01

3.8.5.1 General information

This 60 GB slide-in compact solid-state drive (SSD) is based on multi-level cell (MLC) technology and is SATA 3.0 compatible. The slide-in compact drive can be used in APC910 system units.

- 60 GB solid-state drive
- MLC flash
- S.M.A.R.T. support
- Slide-in compact
- Compatible with SATA 3.0

3.8.5.2 Order data

Model number	Short description	Figure
	Drives	
5AC901.CSSD-01	60 GB SSD MLC - Slide-in compact - SATA	
	Optional accessories	
	Drives	
5MMSSD.0060-00	60 GB SSD MLC - Intel - SATA	

Table 70: 5AC901.CSSD-01 - Order data

3.8.5.3 Technical data

Caution!

A sudden power failure may result in data loss! In very rare cases, the mass storage device may also become damaged.

To prevent damage and loss of data, the use of a UPS is recommended.

Information:

The following characteristics, features and limit values only apply to this accessory and can deviate from those specified for the complete system. The data specifications for the complete system take precedence over those of individual components.

Model number	5AC901.CSSD-01
General information	
Certification	
CE	Yes
UL	cULus E115267 Industrial Control Equipment
HazLoc	cULus HazLoc E180196 Industrial Control Equipment for Hazardous Locations Class I, Division 2, Groups ABCD, T3C[1)]
GOST-R	Yes
Solid-state drive	
Capacity	60 GB
Data reliability	<1 unrecoverable error in 10^{16} bit read accesses
MTBF	1,200,000 hours
S.M.A.R.T. support	Yes
Interface	SATA
Maintenance	None
Sequential read	Max. 550 MB/s, with SATA 6 Gbit/s Max. 280 MB/s, with SATA 3 Gbit/s
Sequential write	Max. 475 MB/s, with SATA 6 Gbit/s Max. 245 MB/s, with SATA 3 Gbit/s
IOPS [2)]	
4k read	15000
4k write	
Typical	23000
Maximum	80000
Endurance	
MLC flash	Yes

Table 71: 5AC901.CSSD-01 - Technical data

Model number	5AC901.CSSD-01
Compatibility	SATA 3.0 compliant ACS-2 SSD Enhanced SMART ATA feature set Native Command Queuing (NCQ)
Environmental conditions	
Temperature	
Operation	0 to 70°C
Storage	-55 to 95°C
Transport	-55 to 95°C
Relative humidity	
Operation	5 to 95%, non-condensing
Storage	5 to 95%, non-condensing
Transport	5 to 95%, non-condensing
Vibration	
Operation	5 to 700 Hz: 2.17 g
Storage	5 to 800 Hz: 3.13 g
Transport	5 to 800 Hz: 3.13 g
Shock	
Operation	1500 g, 0.5 ms
Storage	1500 g, 0.5 ms
Transport	1500 g, 0.5 ms
Elevation	
Operation	-300 to 12192 m
Storage	-300 to 12192 m
Transport	-300 to 12192 m
Mechanical characteristics	
Installation	Fixed [3]
Dimensions	
Width	13 mm
Height	98 mm
Depth	105 mm
Weight	118 g
Manufacturer information	
Manufacturer	Intel
Manufacturer's product ID	SSDSC2CW060A3

Table 71: 5AC901.CSSD-01 - Technical data

1) Yes, although applies only if all components installed within the complete system have this certification and the complete system itself carries the corresponding mark.
2) IOPS: Random read and write input/output operations per second.
3) Slide-in compact installation.

3.8.5.4 Temperature/Humidity diagram

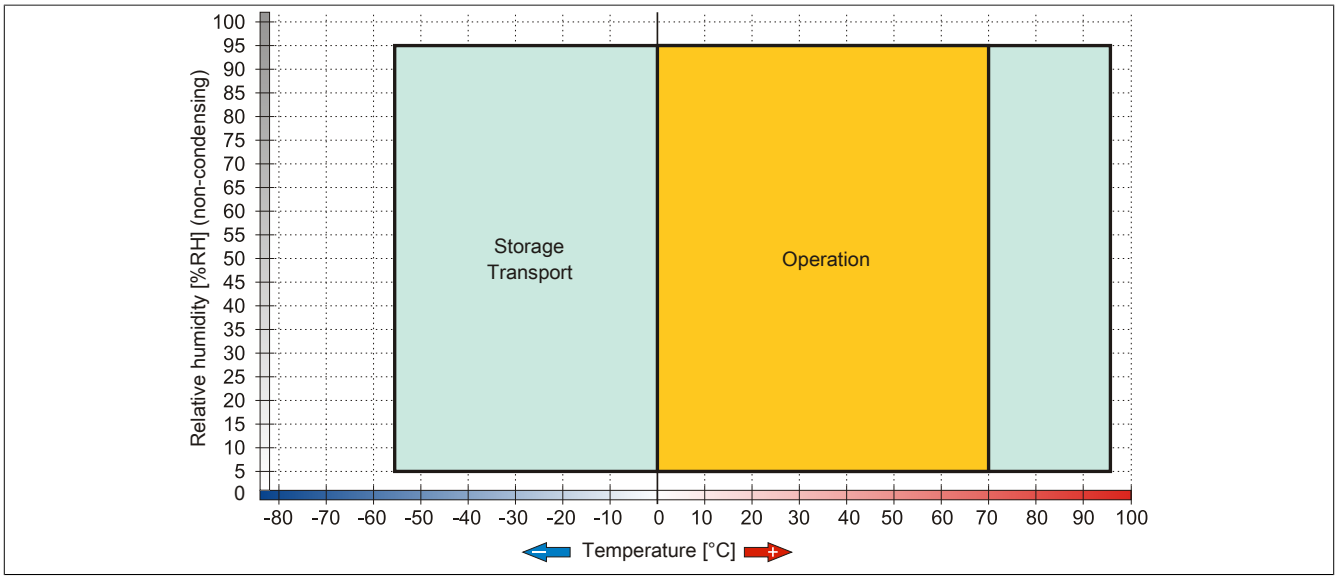

Figure 38: 5AC901.CSSD-01 - Temperature/Humidity diagram

3.8.6 5AC901.CSSD-02

3.8.6.1 General information

This 180 GB slide-in compact solid-state drive (SSD) is based on multi-level cell (MLC) technology and is SATA 3.0 compatible. The slide-in compact drive can be used in APC910 system units.

- 180 GB solid-state drive
- MLC flash
- S.M.A.R.T. support
- Slide-in compact
- Compatible with SATA 3.0

3.8.6.2 Order data

Model number	Short description	Figure
	Drives	
5AC901.CSSD-02	180 GB SSD MLC - Slide-in compact - SATA	
	Optional accessories	
	Drives	
5MMSSD.0180-00	180 GB SSD MLC - Intel - SATA	

Table 72: 5AC901.CSSD-02 - Order data

3.8.6.3 Technical data

Caution!

A sudden power failure may result in data loss! In very rare cases, the mass storage device may also become damaged.

To prevent damage and loss of data, the use of a UPS is recommended.

Information:

The following characteristics, features and limit values only apply to this accessory and can deviate from those specified for the complete system. The data specifications for the complete system take precedence over those of individual components.

Model number	5AC901.CSSD-02
General information	
Certification	
CE	Yes
UL	cULus E115267 Industrial Control Equipment
HazLoc	cULus HazLoc E180196 Industrial Control Equipment for Hazardous Locations Class I, Division 2, Groups ABCD, T3C[1)]
GOST-R	Yes
Solid-state drive	
Capacity	180 GB
Data reliability	<1 unrecoverable error in 10^{16} bit read accesses
MTBF	1,200,000 hours
S.M.A.R.T. support	Yes
Interface	SATA
Maintenance	None
Sequential read	Max. 550 MB/s, with SATA 6 Gbit/s Max. 280 MB/s, with SATA 3 Gbit/s
Sequential write	Max. 520 MB/s, with SATA 6 Gbit/s Max. 260 MB/s, with SATA 3 Gbit/s
IOPS [2)]	
4k read	50000
4k write	
Typical	60000
Maximum	80000
Endurance	
MLC flash	Yes

Table 73: 5AC901.CSSD-02 - Technical data

Model number	5AC901.CSSD-02
Compatibility	SATA 3.0 compliant ACS-2 SSD Enhanced SMART ATA feature set Native Command Queuing (NCQ)
Environmental conditions	
Temperature	
Operation	0 to 70°C
Storage	-55 to 95°C
Transport	-55 to 95°C
Relative humidity	
Operation	5 to 95%, non-condensing
Storage	5 to 95%, non-condensing
Transport	5 to 95%, non-condensing
Vibration	
Operation	5 to 700 Hz: 2.17 g
Storage	5 to 800 Hz: 3.13 g
Transport	5 to 800 Hz: 3.13 g
Shock	
Operation	1500 g, 0.5 ms
Storage	1500 g, 0.5 ms
Transport	1500 g, 0.5 ms
Elevation	
Operation	-300 to 12192 m
Storage	-300 to 12192 m
Transport	-300 to 12192 m
Mechanical characteristics	
Installation	Fixed [3]
Dimensions	
Width	13 mm
Height	98 mm
Depth	105 mm
Weight	118 g
Manufacturer information	
Manufacturer	Intel
Manufacturer's product ID	SSDSC2CW180A3

Table 73: 5AC901.CSSD-02 - Technical data

1) Yes, although applies only if all components installed within the complete system have this certification and the complete system itself carries the corresponding mark.
2) IOPS: Random read and write input/output operations per second.
3) Slide-in compact installation.

3.8.6.4 Temperature/Humidity diagram

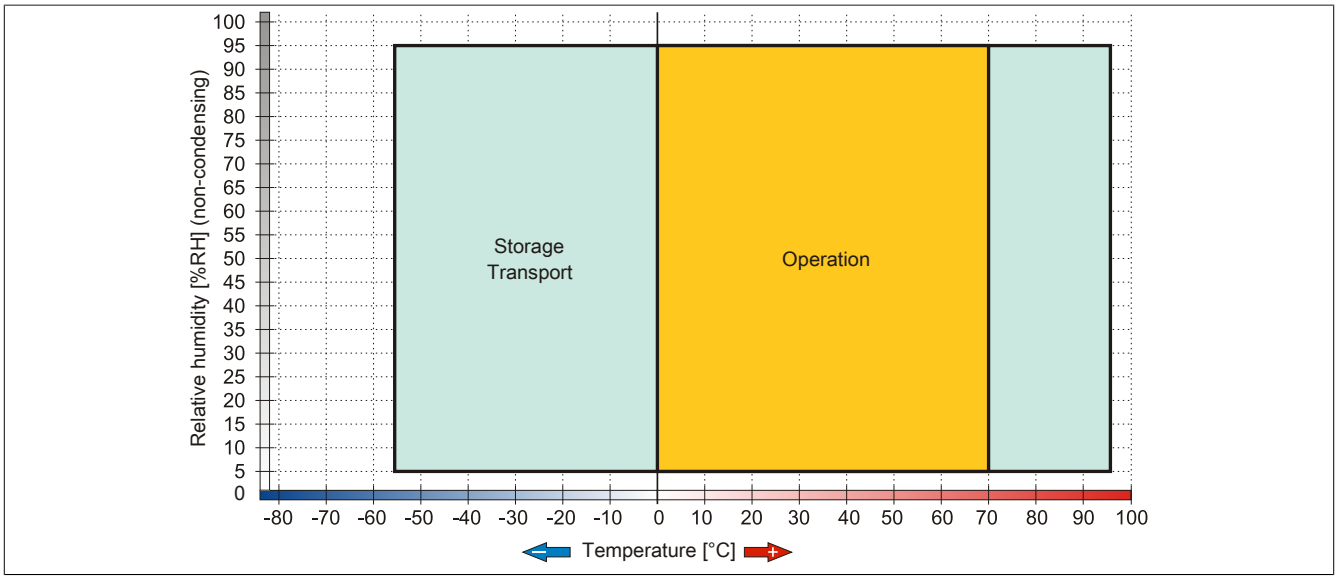

Figure 39: 5AC901.CSSD-02 - Temperature/Humidity diagram

3.8.7 5AC901.CSSD-03

3.8.7.1 General information

This 60 GB slide-in compact solid-state drive (SSD) is based on multi-level cell (MLC) technology and is SATA 3.0 compatible. The slide-in compact drive can be used in APC910 and PPC900 system units.

- 60 GB solid-state drive
- MLC flash
- S.M.A.R.T. support
- Slide-in compact
- Compatible with SATA 3.0

3.8.7.2 Order data

Model number	Short description	Figure
	Drives	
5AC901.CSSD-03	60 GB SSD MLC - Slide-in compact - SATA	
	Optional accessories	
	Drives	
5MMSSD.0060-01	60 GB SSD MLC - Intel - SATA	

Table 74: 5AC901.CSSD-03 - Order data

3.8.7.3 Technical data

Caution!

A sudden power failure may result in data loss! In very rare cases, the mass storage device may also become damaged.

To prevent damage and loss of data, the use of a UPS is recommended.

Information:

The following characteristics, features and limit values only apply to this accessory and can deviate from those specified for the complete system. The data specifications for the complete system take precedence over those of individual components.

Model number	5AC901.CSSD-03		
Revision	**C0**	**D0**	**F0**
General information			
Certification			
CE	Yes		
UL	cULus E115267 Industrial Control Equipment		
HazLoc	cULus HazLoc E180196 Industrial Control Equipment for Hazardous Locations Class I, Division 2, Groups ABCD, T3C[1)]		
DNV GL	Temperature: **B** (0 - 55°C) Humidity: **B** (up to 100%) Vibration: **A** (0.7g) EMC: **B** (Bridge and open deck)[2)]		
GOST-R	Yes		
Solid-state drive			
Capacity	60 GB		
Data reliability	<1 unrecoverable error in 10^{15} bit read accesses		
MTBF	1,500,000 hours		
S.M.A.R.T. support	Yes		
Interface	SATA		
Maintenance	None		
Sequential read	Max. 510 MB/s		
Sequential write	Max. 430 MB/s		
IOPS [3)]			
4k read	Max. 50,000 (random)		
4k write	Max. 25,000 (random)		

Table 75: 5AC901.CSSD-03, 5AC901.CSSD-03, 5AC901.CSSD-03 - Technical data

Model number	5AC901.CSSD-03		
Revision	**C0**	**D0**	**F0**
Endurance			
MLC flash	Yes		
Guaranteed data volume			
Guaranteed	35 TBW [4]		47 TBW [4]
Compatibility	SATA 3.0 compliant ACS-2 SSD Enhanced SMART ATA feature set Native Command Queuing (NCQ)		
Environmental conditions			
Temperature			
Operation	0 to 70°C	-30 to 85°C	-40 to 85°C
Storage	-40 to 85°C		
Transport	-40 to 85°C		
Relative humidity			
Operation	8 to 90%, non-condensing	5 to 90%, non-condensing	
Storage	8 to 95%, non-condensing	5 to 95%, non-condensing	
Transport	8 to 95%, non-condensing	5 to 95%, non-condensing	
Vibration			
Operation	10 to 2000 Hz: 20 g		
Storage	10 to 2000 Hz: 20 g		
Transport	10 to 2000 Hz: 20 g		
Shock			
Operation	1500 g, 0.5 ms		
Storage	1500 g, 0.5 ms		
Transport	1500 g, 0.5 ms		
Elevation			
Operation	-300 to 12192 m		
Storage	-300 to 12192 m		
Transport	-300 to 12192 m		
Mechanical characteristics			
Installation	Fixed [5]		
Dimensions			
Width	13 mm		
Height	98 mm		
Depth	105 mm		
Weight	118 g		
Manufacturer information			
Manufacturer	Toshiba		
Manufacturer's product ID	THNSNH060GBST	THNSNJ060WCST	THNSNJ060WCSU

Table 75: 5AC901.CSSD-03, 5AC901.CSSD-03, 5AC901.CSSD-03 - Technical data

1) Yes, although applies only if all components installed within the complete system have this certification and the complete system itself carries the corresponding mark.
2) Yes, although applies only if all components installed within the complete system have this certification.
3) IOPS: Random read and write input/output operations per second.
4) TBW: Terabytes written.
5) Slide-in compact installation.

3.8.7.4 Temperature/Humidity diagram

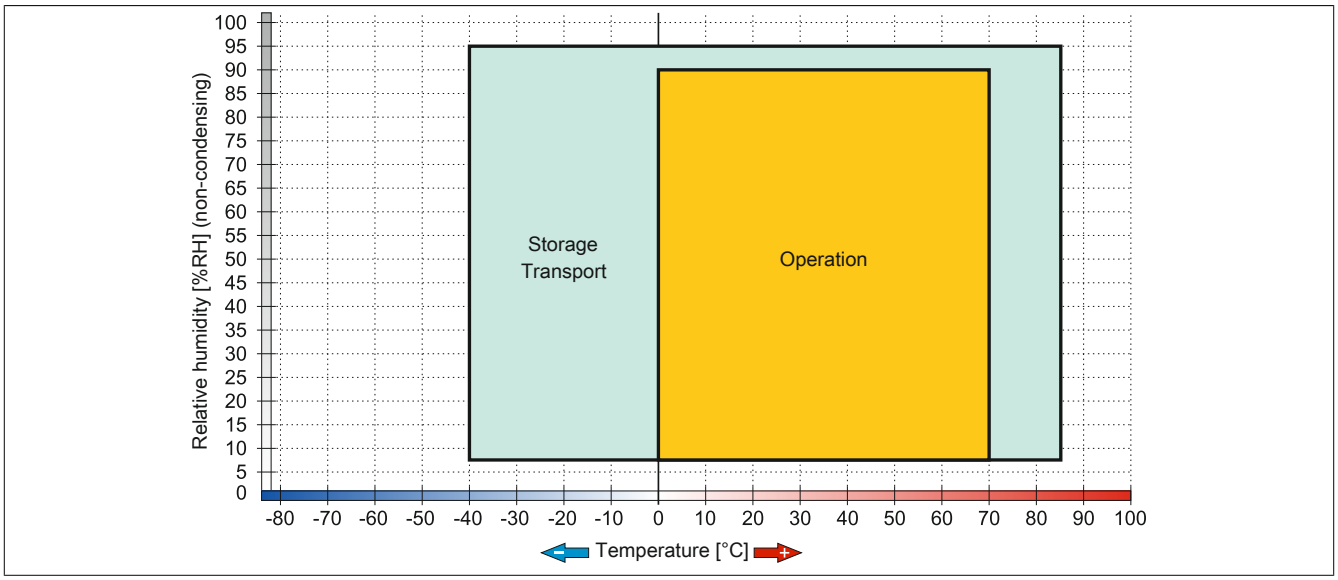

Figure 40: 5AC901.CSSD-03 ≤ Rev. C0 - Temperature/Humidity diagram

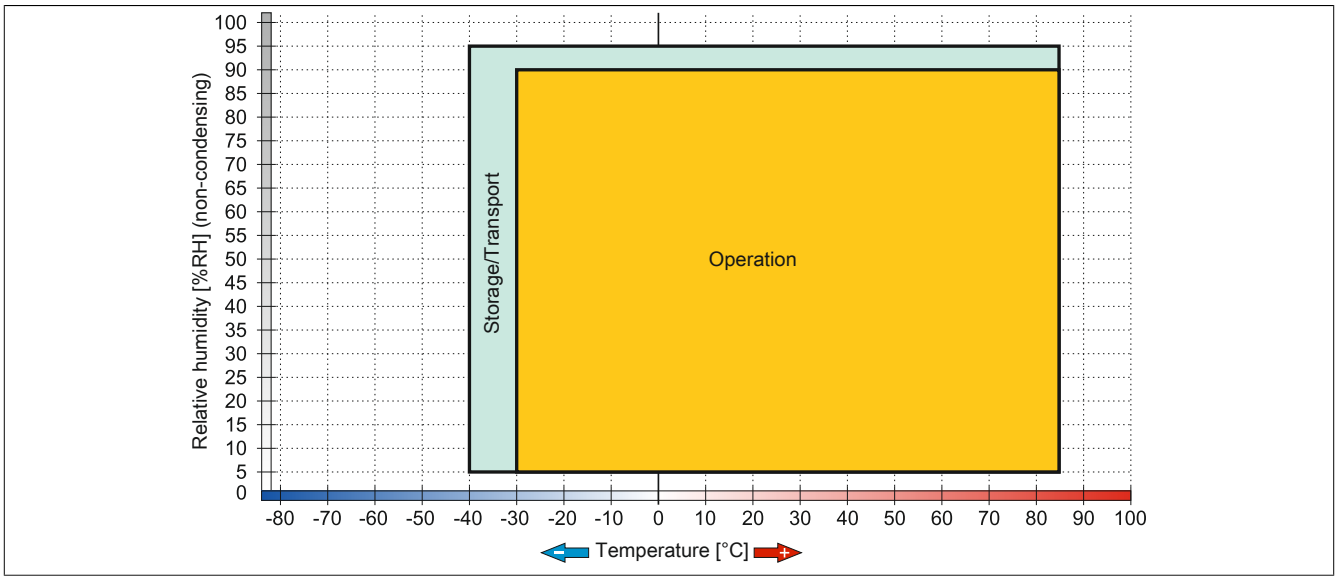

Figure 41: 5AC901.CSSD-03 ≥ Rev. D0 - Temperature/Humidity diagram

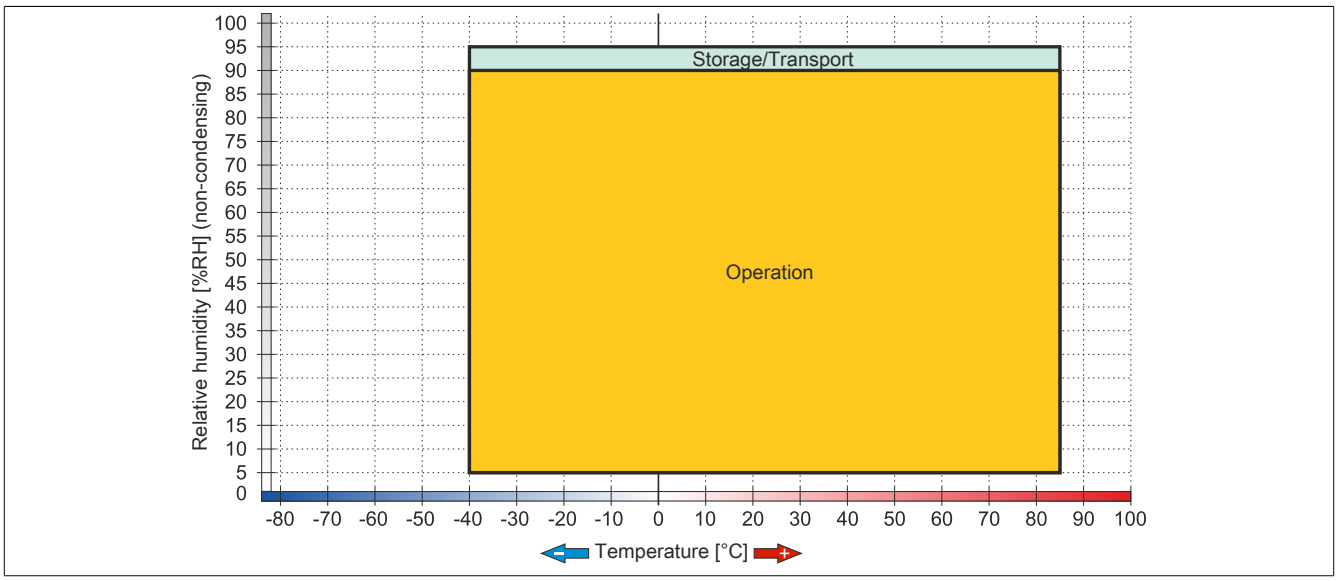

Figure 42: 5AC901.CSSD-03 ≥ Rev. F0 - Temperature/Humidity diagram

3.8.8 5AC901.CSSD-04

3.8.8.1 General information

This 128 GB slide-in compact solid-state drive (SSD) is based on multi-level cell (MLC) technology and is SATA 3.0 compatible. The slide-in compact drive can be used in APC910 and PPC900 system units.

- 128 GB solid-state drive
- MLC flash
- S.M.A.R.T. support
- Slide-in compact
- Compatible with SATA 3.0

3.8.8.2 Order data

Model number	Short description	Figure
	Drives	
5AC901.CSSD-04	128 GB SSD MLC - Slide-in compact - SATA	
	Optional accessories	
	Drives	
5MMSSD.0128-01	128 GB SSD MLC - Toshiba - SATA	

Table 76: 5AC901.CSSD-04 - Order data

3.8.8.3 Technical data

Caution!

A sudden power failure may result in data loss! In very rare cases, the mass storage device may also become damaged.

To prevent damage and loss of data, the use of a UPS is recommended.

Information:

The following characteristics, features and limit values only apply to this accessory and can deviate from those specified for the complete system. The data specifications for the complete system take precedence over those of individual components.

Model number	5AC901.CSSD-04			
Revision	**C0**	**D0**	**E0**	**G0**
General information				
Certification				
CE	Yes			
UL	cULus E115267 Industrial Control Equipment			
HazLoc	cULus HazLoc E180196 Industrial Control Equipment for Hazardous Locations Class I, Division 2, Groups ABCD, T3C[1)]			
DNV GL	Temperature: **B** (0 - 55°C) Humidity: **B** (up to 100%) Vibration: **A** (0.7g) EMC: **B** (Bridge and open deck)[2)]			
GOST-R	Yes			
Solid-state drive				
Capacity	128 GB			
Data reliability	<1 unrecoverable error in 10^{15} bit read accesses			
MTBF	1,500,000 hours			
S.M.A.R.T. support	Yes			
Interface	SATA			
Maintenance	None			
Sequential read	Max. 510 MB/s			
Sequential write	Max. 450 MB/s			
IOPS [3)]				
4k read	Max. 80,000 (random)	Max. 85,000 (random)		
4k write	Max. 35,000 (random)			

Table 77: 5AC901.CSSD-04, 5AC901.CSSD-04, 5AC901.CSSD-04, 5AC901.CSSD-04 - Technical data

Model number	5AC901.CSSD-04			
Revision	**C0**	**D0**	**E0**	**G0**
Endurance				
MLC flash	Yes			
Guaranteed data volume				
Guaranteed	74 TBW [4]			100 TBW [4]
Compatibility	SATA 3.0 compliant ACS-2 SSD Enhanced SMART ATA feature set Native Command Queuing (NCQ)			
Environmental conditions				
Temperature				
Operation	0 to 70°C	-30 to 85°C		-40 to 85°C
Storage	-40 to 85°C			
Transport	-40 to 85°C			
Relative humidity				
Operation	8 to 90%, non-condensing	5 to 90%, non-condensing		
Storage	8 to 95%, non-condensing	5 to 95%, non-condensing		
Transport	8 to 95%, non-condensing	5 to 95%, non-condensing		
Vibration				
Operation	10 to 2000 Hz: 20 g			
Storage	10 to 2000 Hz: 20 g			
Transport	10 to 2000 Hz: 20 g			
Shock				
Operation	1500 g, 0.5 ms			
Storage	1500 g, 0.5 ms			
Transport	1500 g, 0.5 ms			
Elevation				
Operation	-300 to 12192 m			
Storage	-300 to 12192 m			
Transport	-300 to 12192 m			
Mechanical characteristics				
Installation	Fixed [5]			
Dimensions				
Width	13 mm			
Height	98 mm			
Depth	105 mm			
Weight	118 g			
Manufacturer information				
Manufacturer	Toshiba			
Manufacturer's product ID	THNSNH128GBST	THNSNJ128WBST	THNSNJ128WCST	THNSNJ128WCSU

Table 77: 5AC901.CSSD-04, 5AC901.CSSD-04, 5AC901.CSSD-04, 5AC901.CSSD-04 - Technical data

1) Yes, although applies only if all components installed within the complete system have this certification and the complete system itself carries the corresponding mark.
2) Yes, although applies only if all components installed within the complete system have this certification.
3) IOPS: Random read and write input/output operations per second.
4) TBW: Terabytes written.
5) Slide-in compact installation.

3.8.8.4 Temperature/Humidity diagram

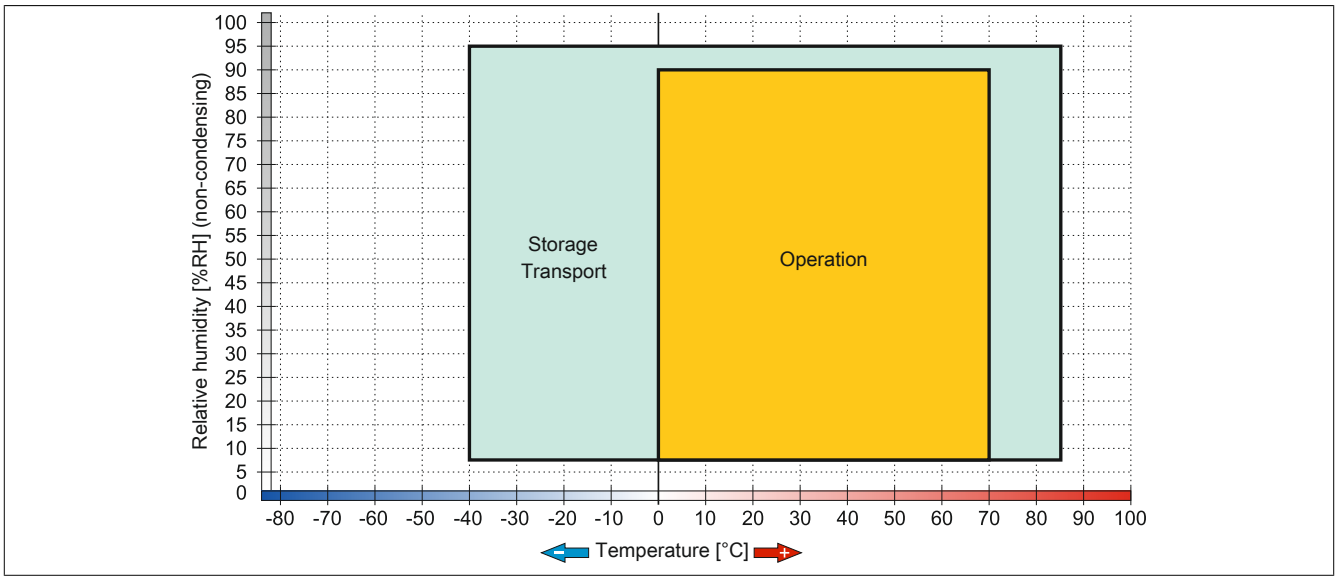

Figure 43: 5AC901.CSSD-04 ≤ Rev. C0 - Temperature/Humidity diagram

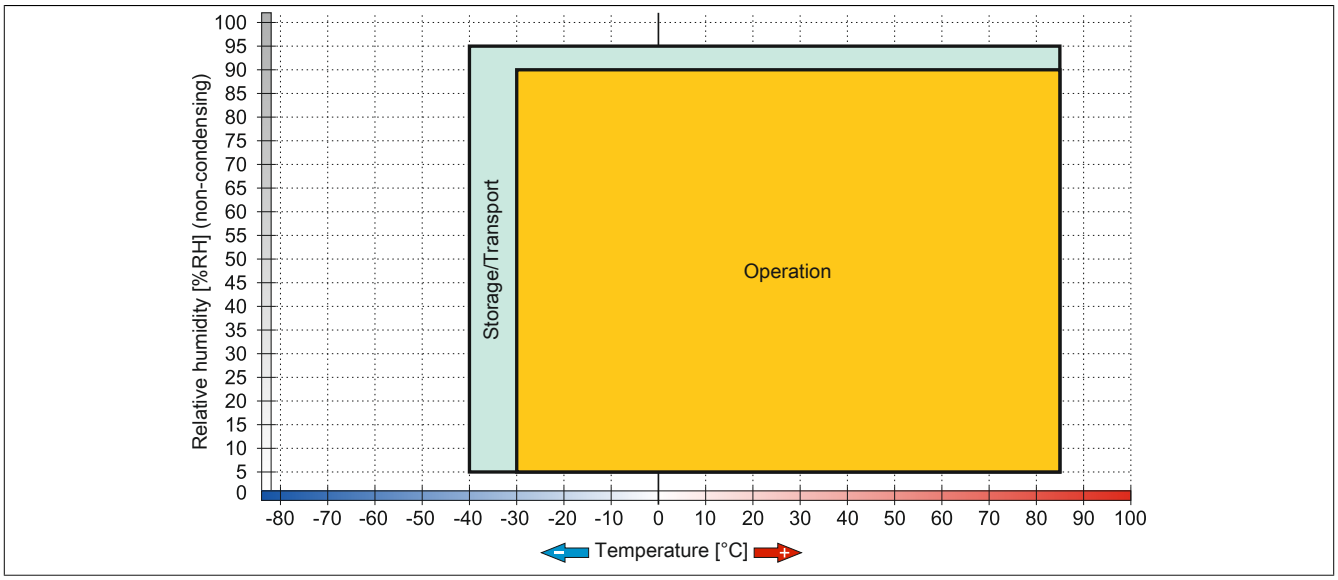

Figure 44: 5AC901.CSSD-04 ≥ Rev. D0 - Temperature/Humidity diagram

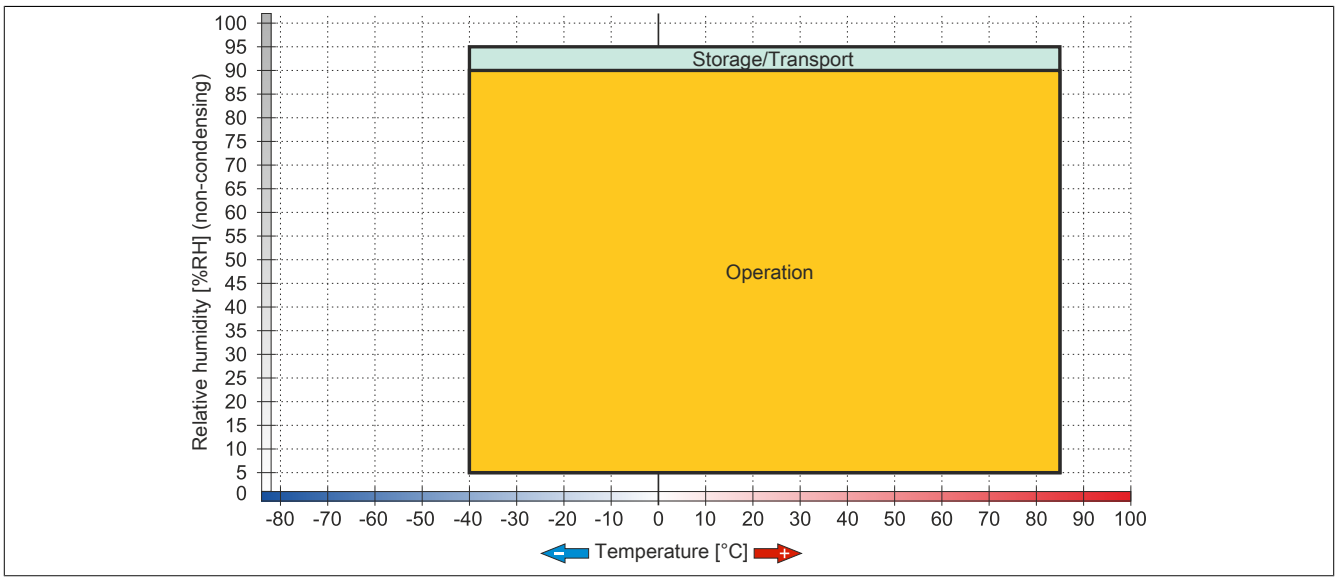

Figure 45: 5AC901.CSSD-04 ≥ Rev. G0 - Temperature/Humidity diagram

3.8.9 5AC901.CSSD-05

3.8.9.1 General information

This 256 GB slide-in compact solid-state drive (SSD) is based on multi-level cell (MLC) technology and is SATA 3.0 compatible. The slide-in compact drive can be used in APC910 and PPC900 system units.

- 256 GB solid state drive
- MLC flash
- S.M.A.R.T. support
- Slide-in compact
- Compatible with SATA 3.0

3.8.9.2 Order data

Model number	Short description	Figure
	Drives	
5AC901.CSSD-05	256 GB SSD MLC - Slide-in compact - Toshiba - SATA	
	Optional accessories	
	Drives	
5MMSSD.0256-00	256 GB SSD MLC - Toshiba - SATA	

Table 78: 5AC901.CSSD-05 - Order data

3.8.9.3 Technical data

Caution!

A sudden power failure may result in data loss! In very rare cases, the mass storage device may also become damaged.

To prevent damage and loss of data, the use of a UPS is recommended.

Information:

The following characteristics, features and limit values only apply to this accessory and can deviate from those specified for the complete system. The data specifications for the complete system take precedence over those of individual components.

Model number	5AC901.CSSD-05	
Revision	**C0**	**E0**
General information		
Certification		
CE	Yes	
UL	cULus E115267 Industrial Control Equipment	
HazLoc	cULus HazLoc E180196 Industrial Control Equipment for Hazardous Locations Class I, Division 2, Groups ABCD, T3C[1)]	
DNV GL	Temperature: **B** (0 - 55°C) Humidity: **B** (up to 100%) Vibration: **A** (0.7g) EMC: **B** (Bridge and open deck)[2)]	
GOST-R	Yes	
Solid-state drive		
Capacity	256 GB	
Data reliability	<1 unrecoverable error in 10^{15} bit read accesses	
MTBF	1,500,000 hours	
S.M.A.R.T. support	Yes	
Interface	SATA	
Maintenance	None	
Sequential read	Max. 510 MB/s	
Sequential write	Max. 460 MB/s	
IOPS [3)]		
4k read	Max. 90,000 (random)	
4k write	Max. 35,000 (random)	

Table 79: 5AC901.CSSD-05, 5AC901.CSSD-05 - Technical data

Model number	5AC901.CSSD-05	
Revision	**C0**	**E0**
Endurance		
MLC flash	Yes	
Guaranteed data volume		
Guaranteed	148 TBW [4]	200 TBW [4]
Compatibility	SATA 3.0 compliant ACS-2 SSD Enhanced SMART ATA feature set Native Command Queuing (NCQ)	
Environmental conditions		
Temperature		
Operation	-30 to 85°C	-40 to 85°C
Storage	-40 to 85°C	
Transport	-40 to 85°C	
Relative humidity		
Operation	5 to 90%, non-condensing	
Storage	5 to 95%, non-condensing	
Transport	5 to 95%, non-condensing	
Vibration		
Operation	10 to 2000 Hz: 20 g	
Storage	10 to 2000 Hz: 20 g	
Transport	10 to 2000 Hz: 20 g	
Shock		
Operation	1500 g, 0.5 ms	
Storage	1500 g, 0.5 ms	
Transport	1500 g, 0.5 ms	
Elevation		
Operation	-300 to 12192 m	
Storage	-300 to 12192 m	
Transport	-300 to 12192 m	
Mechanical characteristics		
Installation	Fixed [5]	
Dimensions		
Width	13 mm	
Height	98 mm	
Depth	105 mm	
Weight	118 g	
Manufacturer information		
Manufacturer	Toshiba	
Manufacturer's product ID	THNSNJ256WCST	THNSNJ256WCSU

Table 79: 5AC901.CSSD-05, 5AC901.CSSD-05 - Technical data

1) Yes, although applies only if all components installed within the complete system have this certification and the complete system itself carries the corresponding mark.
2) Yes, although applies only if all components installed within the complete system have this certification.
3) IOPS: Random read and write input/output operations per second.
4) TBW: Terabytes written.
5) Slide-in compact installation.

3.8.9.4 Temperature/Humidity diagram

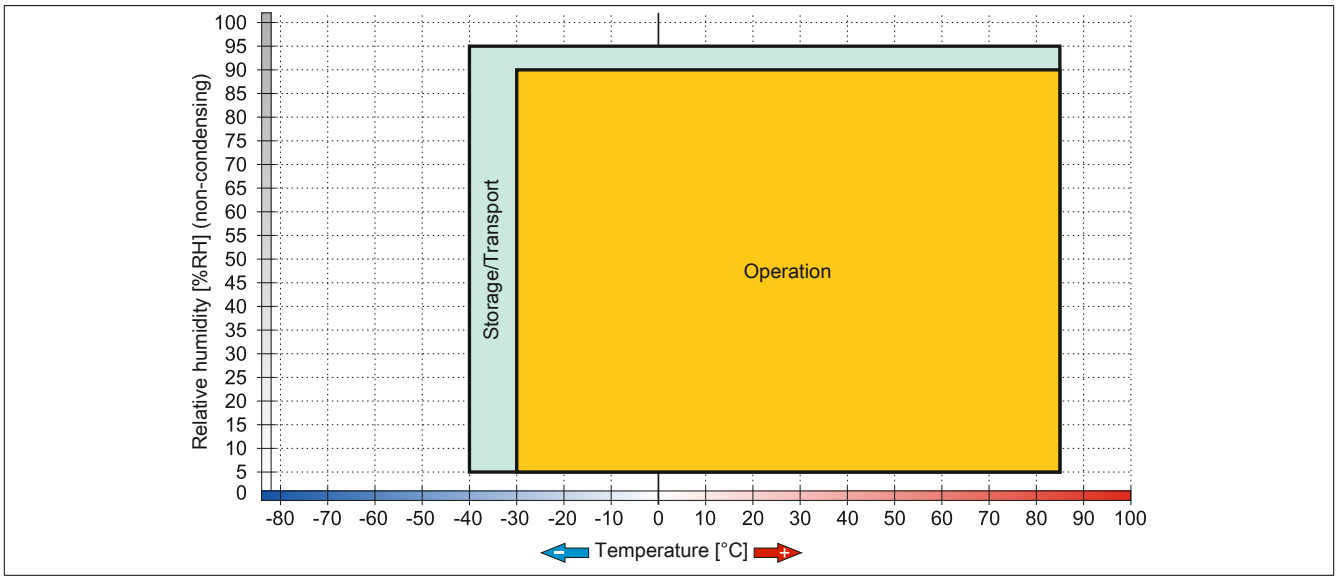

Figure 46: 5AC901.CSSD-05 ≤ Rev. D0 - Temperature/Humidity diagram

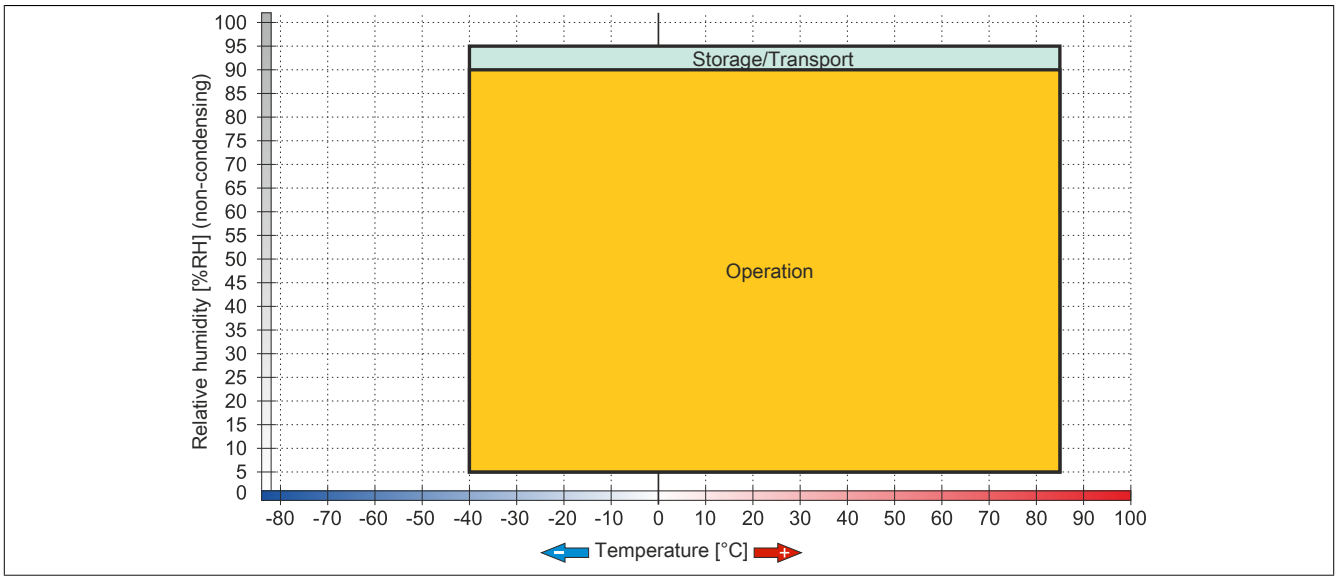

Figure 47: 5AC901.CSSD-05 ≥ Rev. E0 - Temperature/Humidity diagram

3.8.10 5AC901.CSSD-06

3.8.10.1 General information

This 512 GB slide-in compact solid-state drive (SSD) is based on multi-level cell (MLC) technology and is SATA 3.0 compatible. The slide-in compact drive can be used in APC910 and PPC900 system units.

- 512 GB solid-state drive
- MLC flash
- S.M.A.R.T. support
- Slide-in compact
- Compatible with SATA 3.0

3.8.10.2 Order data

Model number	Short description	Figure
	Drives	
5AC901.CSSD-06	512 GB SSD MLC - Slide-in compact - Toshiba - SATA	
	Optional accessories	
	Drives	
5MMSSD.0512-00	512 GB SSD MLC - Toshiba - SATA	

Table 80: 5AC901.CSSD-06 - Order data

3.8.10.3 Technical data

Caution!

A sudden power failure may result in data loss! In very rare cases, the mass storage device may also become damaged.

To prevent damage and loss of data, the use of a UPS is recommended.

Information:

The following characteristics, features and limit values only apply to this accessory and can deviate from those specified for the complete system. The data specifications for the complete system take precedence over those of individual components.

Model number	5AC901.CSSD-06
General information	
Certification	
CE	Yes
UL	cULus E115267 Industrial Control Equipment
HazLoc	cULus HazLoc E180196 Industrial Control Equipment for Hazardous Locations Class I, Division 2, Groups ABCD, T3C[1)]
DNV GL	Temperature: **B** (0 - 55°C) Humidity: **B** (up to 100%) Vibration: **A** (0.7g) EMC: **B** (Bridge and open deck)[2)]
GOST-R	Yes
Solid-state drive	
Capacity	512 GB
Data reliability	<1 unrecoverable error in 10^{15} bit read accesses
MTBF	1,500,000 hours
S.M.A.R.T. support	Yes
Interface	SATA
Maintenance	None
Sequential read	Max. 510 MB/s
Sequential write	Max. 460 MB/s
IOPS [3)]	
4k read	Max. 90,000 (random)
4k write	Max. 35,000 (random)

Table 81: 5AC901.CSSD-06 - Technical data

Model number	5AC901.CSSD-06
Endurance	
MLC flash	Yes
Guaranteed data volume	
Guaranteed	400 TBW [4]
Compatibility	SATA 3.1 compliant ACS-2 SSD Enhanced SMART ATA feature set Native Command Queuing (NCQ)
Environmental conditions	
Temperature	
Operation	-40 to 85°C
Storage	-40 to 85°C
Transport	-40 to 85°C
Relative humidity	
Operation	5 to 90%, non-condensing
Storage	5 to 95%, non-condensing
Transport	5 to 95%, non-condensing
Vibration	
Operation	10 to 2000 Hz: 20 g
Storage	10 to 2000 Hz: 20 g
Transport	10 to 2000 Hz: 20 g
Shock	
Operation	1500 g, 0.5 ms
Storage	1500 g, 0.5 ms
Transport	1500 g, 0.5 ms
Elevation	
Operation	-300 to 12192 m
Storage	-300 to 12192 m
Transport	-300 to 12192 m
Mechanical characteristics	
Installation	Fixed [5]
Dimensions	
Width	13 mm
Height	98 mm
Depth	105 mm
Weight	118 g
Manufacturer information	
Manufacturer	Toshiba
Manufacturer's product ID	THNSNJ512WCSU

Table 81: 5AC901.CSSD-06 - Technical data

1) Yes, although applies only if all components installed within the complete system have this certification and the complete system itself carries the corresponding mark.
2) Yes, although applies only if all components installed within the complete system have this certification.
3) IOPS: Random read and write input/output operations per second.
4) TBW: Terabytes written.
5) Slide-in compact installation.

3.8.10.4 Temperature/Humidity diagram

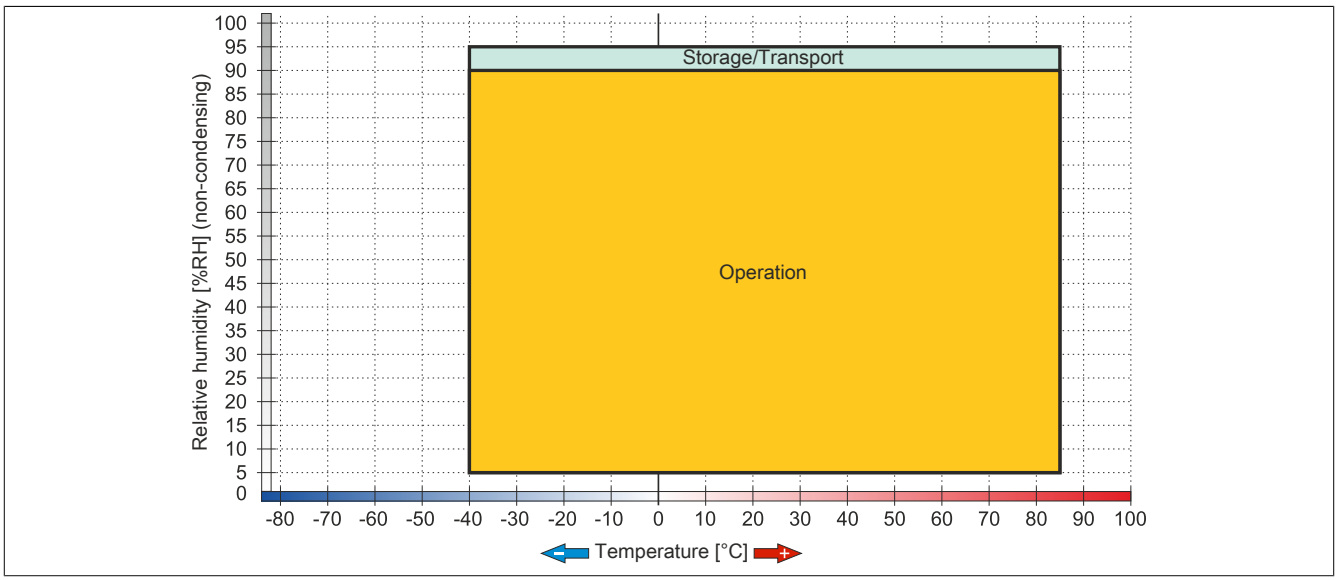

Figure 48: 5AC901.CSSD-06 - Temperature/Humidity diagram

3.8.11 5MMSSD.0060-00

3.8.11.1 General information

This 60 GB slide-in compact solid-state drive (SSD) is based on multi-level cell (MLC) technology and can be used as a replacement or accessory part.

- Replacement for 5AC801.SSDI-01 or 5AC901.CSSD-01 SSD drives
- Accessory for the APC510 (optional SSD for I/O board)

Information:

A drive can only be installed or replaced at B&R.

3.8.11.2 Order data

Model number	Short description	Figure
	Drives	
5MMSSD.0060-00	60 GB SSD MLC - Intel - SATA	

Table 82: 5MMSSD.0060-00 - Order data

3.8.11.3 Technical data

Caution!

A sudden power failure may result in data loss! In very rare cases, the mass storage device may also become damaged.

To prevent damage and loss of data, the use of a UPS is recommended.

Information:

The following characteristics, features and limit values only apply to this accessory and can deviate from those specified for the complete system. The data specifications for the complete system take precedence over those of individual components.

Model number	5MMSSD.0060-00
General information	
Certification	
CE	Yes
UL	cULus E115267 Industrial Control Equipment
HazLoc	cULus HazLoc E180196 Industrial Control Equipment for Hazardous Locations Class I, Division 2, Groups ABCD[1)]
GOST-R	Yes
Solid-state drive	
Capacity	60 GB
Data reliability	<1 unrecoverable error in 10^{16} bit read accesses
MTBF	1,200,000 hours
S.M.A.R.T. support	Yes
Interface	SATA
Maintenance	None
Sequential read	Max. 550 MB/s, with SATA 6 Gbit/s Max. 280 MB/s, with SATA 3 Gbit/s
Sequential write	Max. 475 MB/s, with SATA 6 Gbit/s Max. 245 MB/s, with SATA 3 Gbit/s

Table 83: 5MMSSD.0060-00 - Technical data

Model number	5MMSSD.0060-00
IOPS [2]	
4k read	15000
4k write	
Typical	23000
Maximum	80000
Endurance	
MLC flash	Yes
Compatibility	SATA 3.0 compliant ACS-2 SSD Enhanced SMART ATA feature set Native Command Queuing (NCQ)
Environmental conditions	
Temperature	
Operation	0 to 70°C
Storage	-55 to 95°C
Transport	-55 to 95°C
Relative humidity	
Operation	5 to 95%, non-condensing
Storage	5 to 95%, non-condensing
Transport	5 to 95%, non-condensing
Vibration	
Operation	5 to 700 Hz: 2.17 g
Storage	5 to 800 Hz: 3.13 g
Transport	5 to 800 Hz: 3.13 g
Shock	
Operation	1500 g, 0.5 ms
Storage	1500 g, 0.5 ms
Transport	1500 g, 0.5 ms
Elevation	
Operation	-300 to 12192 m
Storage	-300 to 12192 m
Transport	-300 to 12192 m
Mechanical characteristics	
Dimensions	
Width	9.5 mm
Height	69 mm
Depth	100 mm
Weight	78 g
Manufacturer information	
Manufacturer	Intel
Manufacturer's product ID	SSDSC2CW060A3

Table 83: 5MMSSD.0060-00 - Technical data

1) Yes, although applies only if all components installed within the complete system have this certification and the complete system itself carries the corresponding mark.
2) IOPS: Random read and write input/output operations per second.

3.8.11.4 Temperature/Humidity diagram

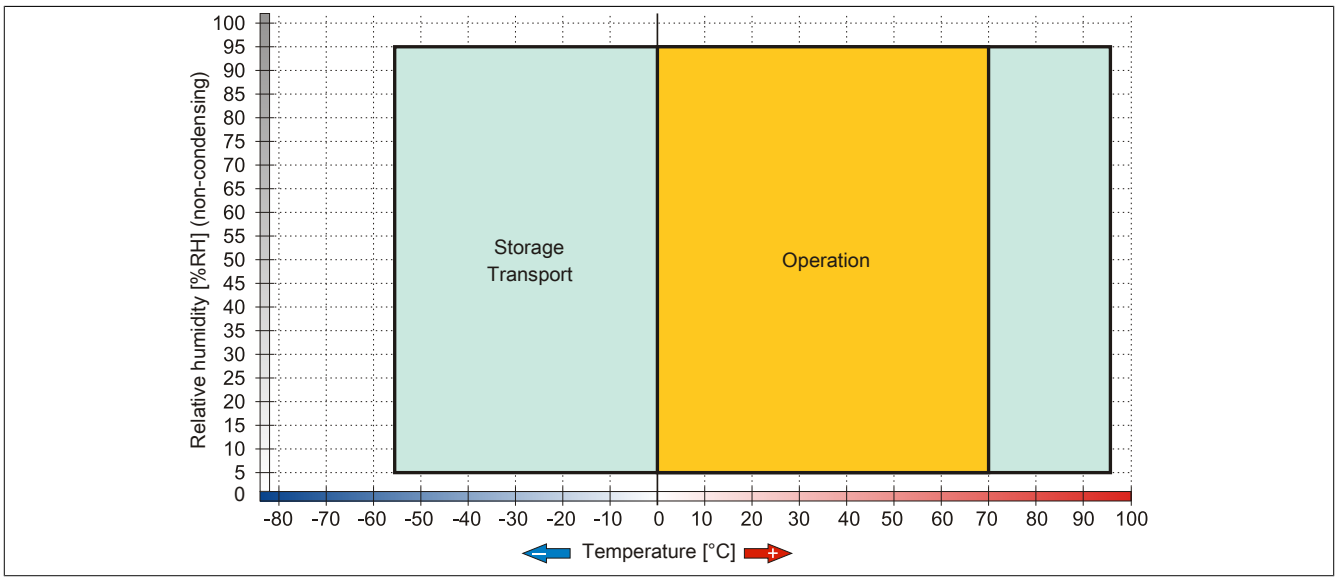

Figure 49: 5MMSSD.0060-00 - Temperature/Humidity diagram

3.8.12 5MMSSD.0060-01

3.8.12.1 General information

This 60 GB slide-in compact solid-state drive (SSD) is based on multi-level cell (MLC) technology and can be used as a replacement or accessory part.

- Replacement for 5AC801.SSDI-03 or 5AC901.CSSD-03 SSD drives
- Accessory for the APC510 (optional SSD for I/O board)

Information:

A drive can only be installed or replaced at B&R.

3.8.12.2 Order data

Model number	Short description	Figure
	Drives	
5MMSSD.0060-01	60 GB SSD MLC - Intel - SATA	

Table 84: 5MMSSD.0060-01 - Order data

3.8.12.3 Technical data

Caution!

A sudden power failure may result in data loss! In very rare cases, the mass storage device may also become damaged.

To prevent damage and loss of data, the use of a UPS is recommended.

Information:

The following characteristics, features and limit values only apply to this accessory and can deviate from those specified for the complete system. The data specifications for the complete system take precedence over those of individual components.

Model number	5MMSSD.0060-01		
Revision	**C0**	**D0**	**E0**
General information			
Certification			
CE	Yes		
UL	cULus E115267 Industrial Control Equipment		
HazLoc	cULus HazLoc E180196 Industrial Control Equipment for Hazardous Locations Class I, Division 2, Groups ABCD[1)]		
GOST-R	Yes		
Solid-state drive			
Capacity	60 GB		
Data reliability	<1 unrecoverable error in 10^{15} bit read accesses		
MTBF	1,500,000 hours		
S.M.A.R.T. support	Yes		
Interface	SATA		
Maintenance	None		
Sequential read	Max. 510 MB/s		
Sequential write	Max. 430 MB/s		
IOPS [2)]			
4k read	Max. 50,000 (random)		
4k write	Max. 25,000 (random)		
Endurance			
MLC flash	Yes		
Guaranteed data volume			
Guaranteed	35 TBW [3)]		47 TBW [3)]

Table 85: 5MMSSD.0060-01, 5MMSSD.0060-01, 5MMSSD.0060-01 - Technical data

Model number	5MMSSD.0060-01		
Revision	**C0**	**D0**	**E0**
Compatibility	SATA 3.0 compliant ACS-2 SSD Enhanced SMART ATA feature set Native Command Queuing (NCQ)		
Environmental conditions			
Temperature			
Operation	0 to 70°C	-30 to 85°C	-40 to 85°C
Storage	-40 to 85°C		
Transport	-40 to 85°C		
Relative humidity			
Operation	8 to 90%, non-condensing	5 to 90%, non-condensing	
Storage	8 to 95%, non-condensing	5 to 95%, non-condensing	
Transport	8 to 95%, non-condensing	5 to 95%, non-condensing	
Vibration			
Operation	10 to 2000 Hz: 20 g		
Storage	10 to 2000 Hz: 20 g		
Transport	10 to 2000 Hz: 20 g		
Shock			
Operation	1500 g, 0.5 ms		
Storage	1500 g, 0.5 ms		
Transport	1500 g, 0.5 ms		
Elevation			
Operation	-300 to 12192 m		
Storage	-300 to 12192 m		
Transport	-300 to 12192 m		
Mechanical characteristics			
Dimensions			
Width	9.5 mm	7 mm	
Height	69 mm		
Depth	100 mm		
Weight	78 g		
Manufacturer information			
Manufacturer	Toshiba		
Manufacturer's product ID	THNSNH060GBST	THNSNJ060WCST	THNSNJ060WCSU

Table 85: 5MMSSD.0060-01, 5MMSSD.0060-01, 5MMSSD.0060-01 - Technical data

1) Yes, although applies only if all components installed within the complete system have this certification and the complete system itself carries the corresponding mark.
2) IOPS: Random read and write input/output operations per second.
3) TBW: Terabytes written.

3.8.12.4 Temperature/Humidity diagram

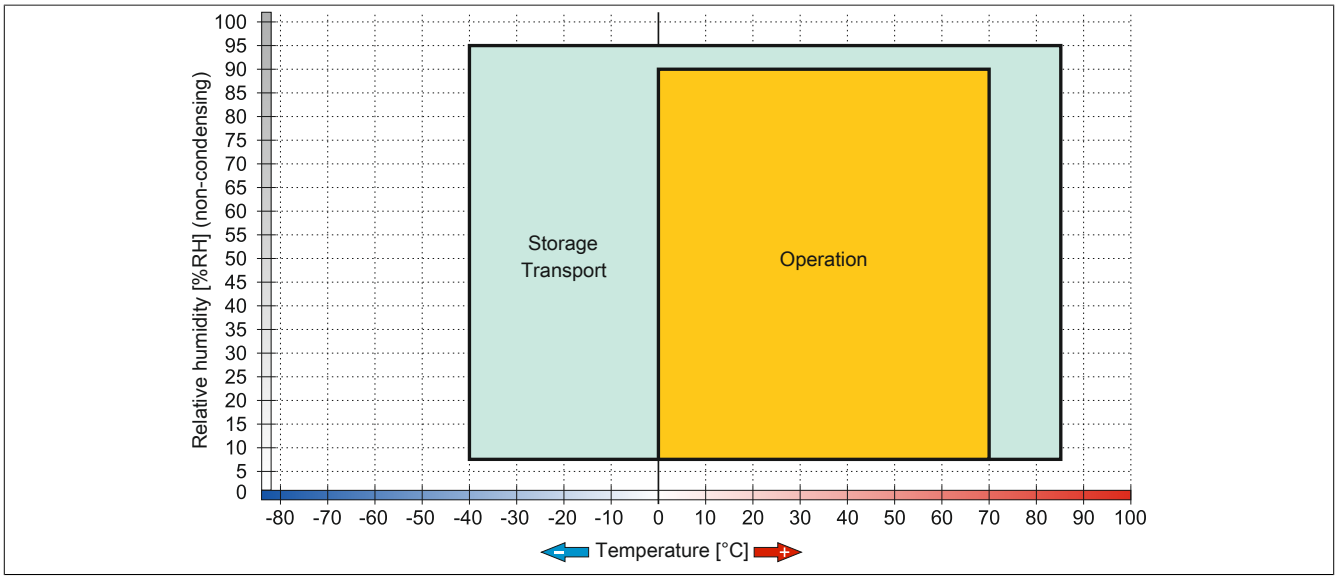

Figure 50: 5MMSSD.0060-01 ≤ Rev. C0 - Temperature/Humidity diagram

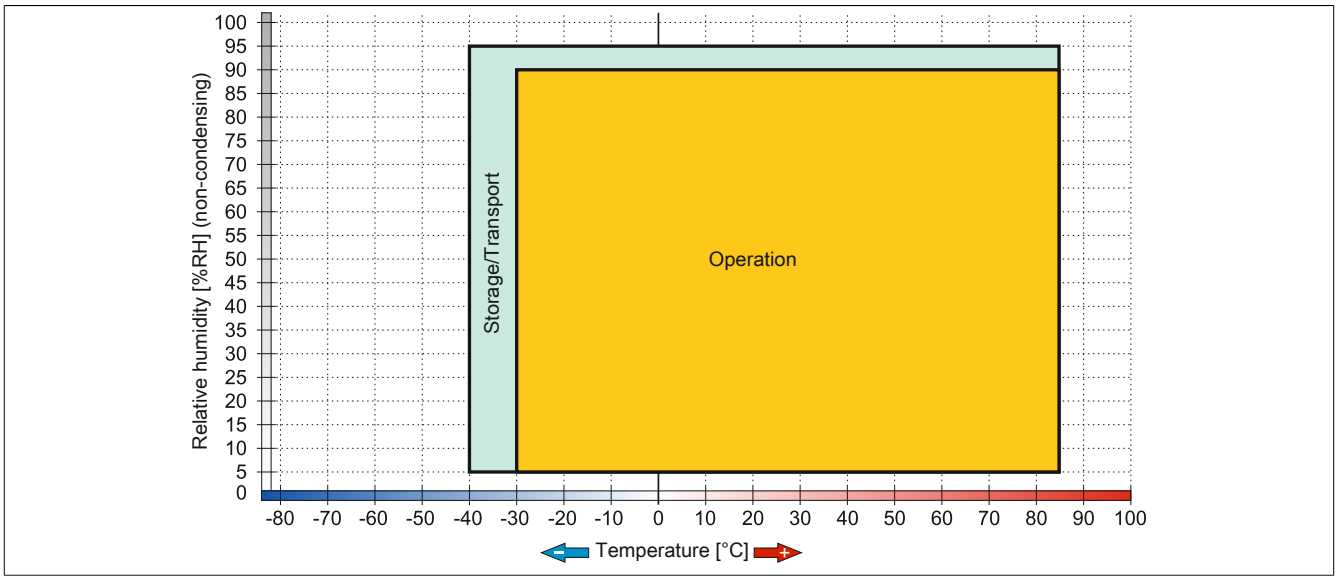

Figure 51: 5MMSSD.0060-01 Rev. D0 - Temperature/Humidity diagram

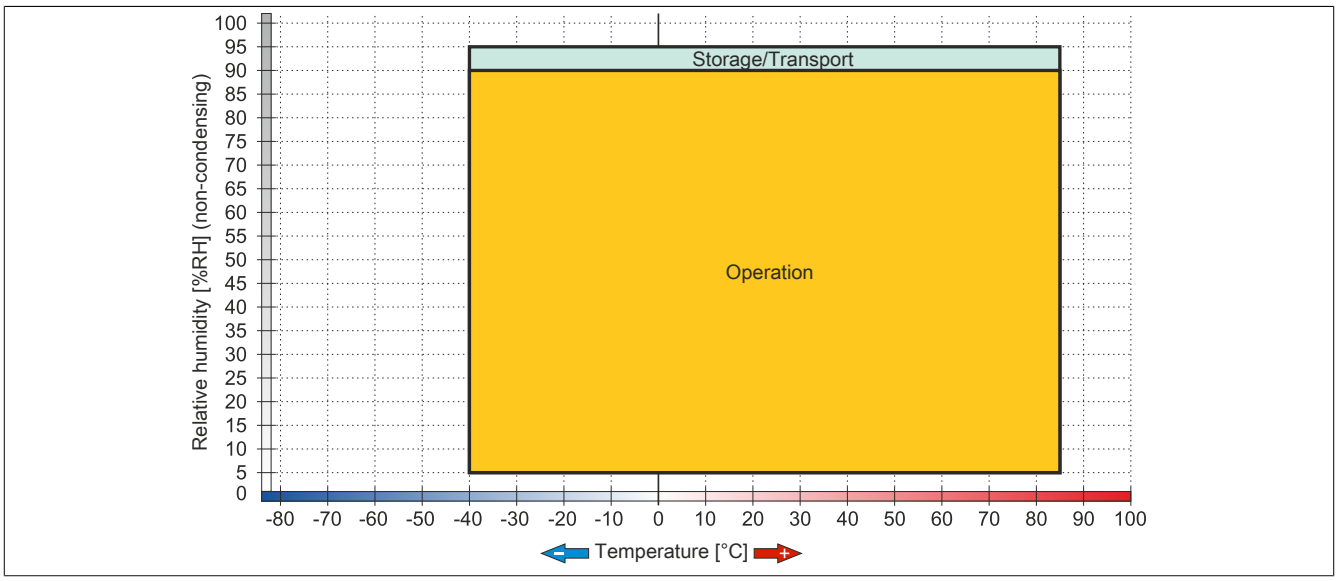

Figure 52: 5MMSSD.0060-01 ≥ Rev. E0 - Temperature/Humidity diagram

3.8.13 5MMSSD.0128-01

3.8.13.1 General information

This 128 GB slide-in compact solid-state drive (SSD) is based on multi-level cell (MLC) technology and can be used as a replacement or accessory part.

- Replacement for 5AC801.SSDI-04 or 5AC901.CSSD-04 SSD drives
- Accessory for the APC510 (optional SSD for I/O board)

Information:

A drive can only be installed or replaced at B&R.

3.8.13.2 Order data

Model number	Short description	Figure
	Drives	
5MMSSD.0128-01	128 GB SSD MLC - Toshiba - SATA	

Table 86: 5MMSSD.0128-01 - Order data

3.8.13.3 Technical data

Caution!

A sudden power failure may result in data loss! In very rare cases, the mass storage device may also become damaged.

To prevent damage and loss of data, the use of a UPS is recommended.

Information:

The following characteristics, features and limit values only apply to this accessory and can deviate from those specified for the complete system. The data specifications for the complete system take precedence over those of individual components.

Model number	5MMSSD.0128-01		
Revision	**C0**	**D0**	**E0**
General information			
Certification			
CE	Yes		
UL	cULus E115267 Industrial Control Equipment		
HazLoc	cULus HazLoc E180196 Industrial Control Equipment for Hazardous Locations Class I, Division 2, Groups ABCD[1)]		
GOST-R	Yes		
Solid-state drive			
Capacity	128 GB		
Data reliability	<1 unrecoverable error in 10^{15} bit read accesses		
MTBF	1,500,000 hours		
S.M.A.R.T. support	Yes		
Interface	SATA		
Maintenance	None		
Sequential read	Max. 510 MB/s		
Sequential write	Max. 450 MB/s		
IOPS [2)]			
4k read	Max. 85,000 (random)		
4k write	Max. 35,000 (random)		

Table 87: 5MMSSD.0128-01, 5MMSSD.0128-01, 5MMSSD.0128-01 - Technical data

Model number	5MMSSD.0128-01		
Revision	**C0**	**D0**	**E0**
Endurance			
MLC flash	Yes		
Guaranteed data volume			
Guaranteed	74 TBW [3]		100 TBW [3]
Compatibility	SATA 3.0 compliant ACS-2 SSD Enhanced SMART ATA feature set Native Command Queuing (NCQ)		
Environmental conditions			
Temperature			
Operation	0 to 70°C	-30 to 85°C	-40 to 85°C
Storage	-40 to 85°C		
Transport	-40 to 85°C		
Relative humidity			
Operation	8 to 90%, non-condensing	5 to 90%, non-condensing	
Storage	8 to 95%, non-condensing	5 to 95%, non-condensing	
Transport	8 to 95%, non-condensing	5 to 95%, non-condensing	
Vibration			
Operation	10 to 2000 Hz: 20 g		
Storage	10 to 2000 Hz: 20 g		
Transport	10 to 2000 Hz: 20 g		
Shock			
Operation	1500 g, 0.5 ms		
Storage	1500 g, 0.5 ms		
Transport	1500 g, 0.5 ms		
Elevation			
Operation	-300 to 12192 m		
Storage	-300 to 12192 m		
Transport	-300 to 12192 m		
Mechanical characteristics			
Dimensions			
Width	9.5 mm	7 mm	
Height	69 mm		
Depth	100 mm		
Weight	78 g		
Manufacturer information			
Manufacturer	Toshiba		
Manufacturer's product ID	THNSNH128GBST	THNSNJ128WCST	THNSNJ128WCSU

Table 87: 5MMSSD.0128-01, 5MMSSD.0128-01, 5MMSSD.0128-01 - Technical data

1) Yes, although applies only if all components installed within the complete system have this certification and the complete system itself carries the corresponding mark.
2) IOPS: Random read and write input/output operations per second.
3) TBW: Terabytes written.

3.8.13.4 Temperature/Humidity diagram

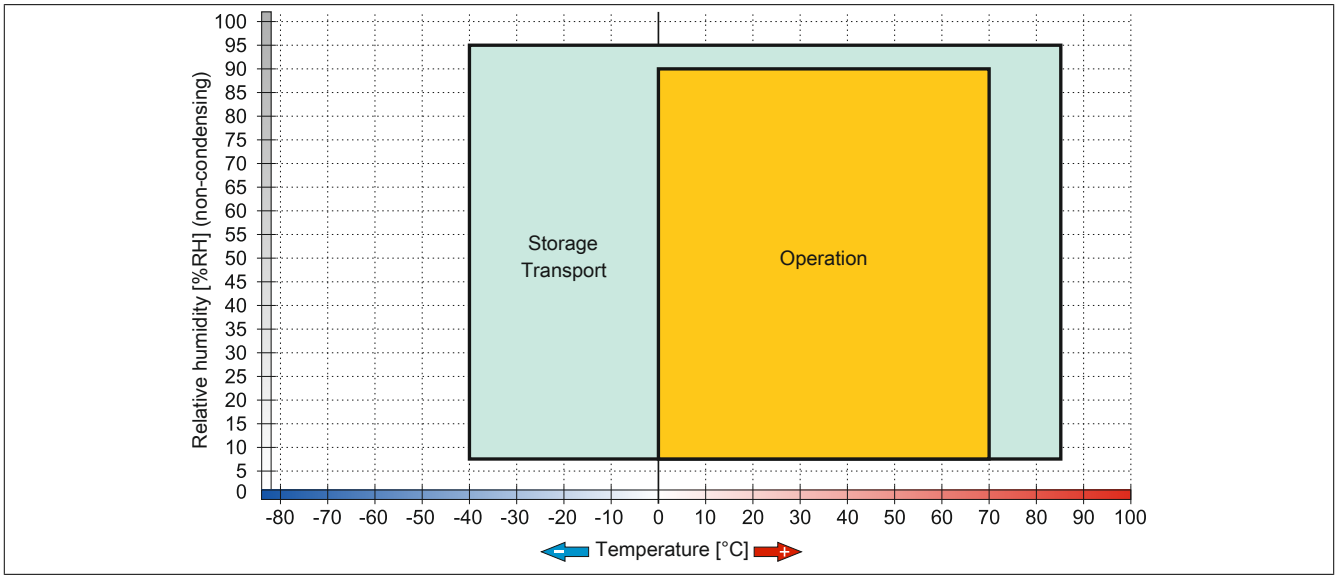

Figure 53: 5MMSSD.0128-01 ≤ Rev. C0 - Temperature/Humidity diagram

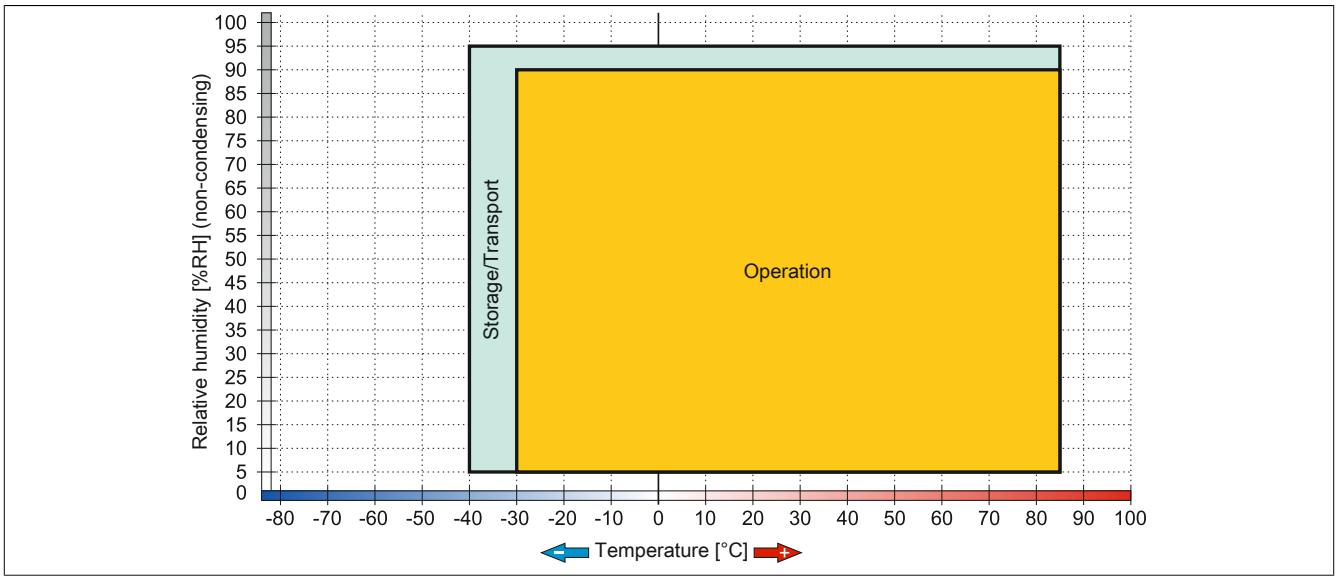

Figure 54: 5MMSSD.0128-01 Rev. D0 - Temperature/Humidity diagram

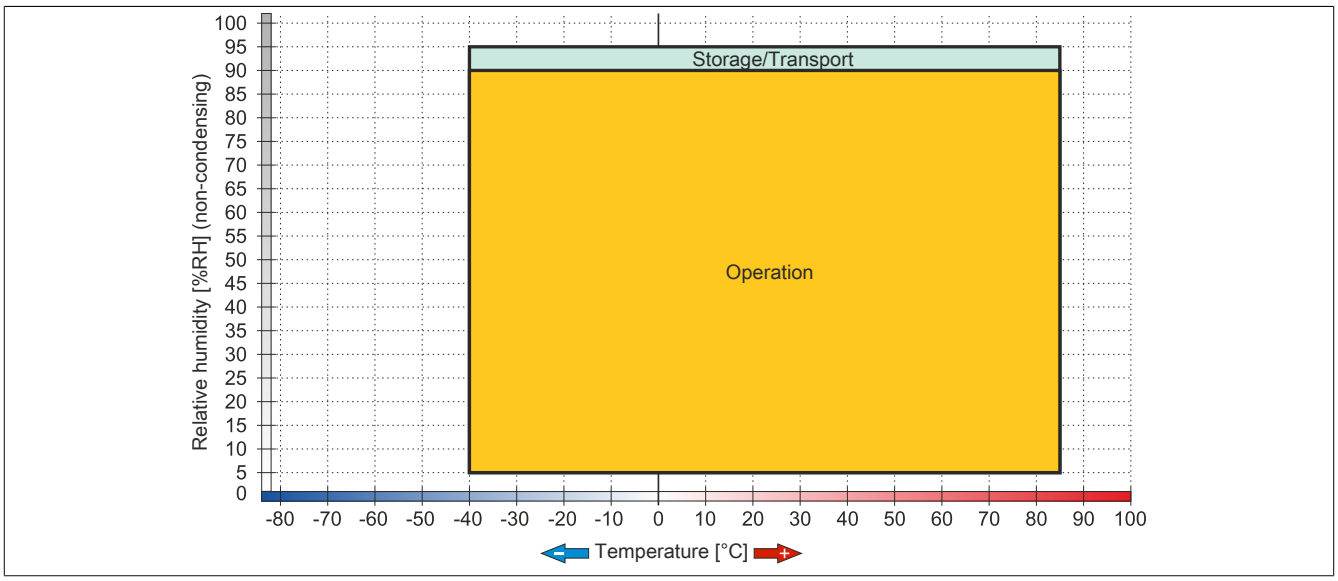

Figure 55: 5MMSSD.0128-01 ≥ Rev. E0 - Temperature/Humidity diagram

3.8.14 5MMSSD.0180-00

3.8.14.1 General information

This 180 GB slide-in compact solid-state drive (SSD) is based on multi-level cell (MLC) technology and can be used as a replacement or accessory part.

- Replacement for 5AC801.SSDI-02 or 5AC901.CSSD-02 SSD drives
- Accessory for the APC510 (optional SSD for I/O board)

Information:

A drive can only be installed or replaced at B&R.

3.8.14.2 Order data

Model number	Short description	Figure
	Drives	
5MMSSD.0180-00	180 GB SSD MLC - Intel - SATA	

Table 88: 5MMSSD.0180-00 - Order data

3.8.14.3 Technical data

Caution!

A sudden power failure may result in data loss! In very rare cases, the mass storage device may also become damaged.

To prevent damage and loss of data, the use of a UPS is recommended.

Information:

The following characteristics, features and limit values only apply to this accessory and can deviate from those specified for the complete system. The data specifications for the complete system take precedence over those of individual components.

Model number	5MMSSD.0180-00
General information	
Certification	
CE	Yes
UL	cULus E115267 Industrial Control Equipment
HazLoc	cULus HazLoc E180196 Industrial Control Equipment for Hazardous Locations Class I, Division 2, Groups ABCD[1)]
GOST-R	Yes
Solid-state drive	
Capacity	180 GB
Data reliability	<1 unrecoverable error in 10^{16} bit read accesses
MTBF	1,200,000 hours
S.M.A.R.T. support	Yes
Interface	SATA
Maintenance	None
Sequential read	Max. 550 MB/s, with SATA 6 Gbit/s Max. 280 MB/s, with SATA 3 Gbit/s
Sequential write	Max. 520 MB/s, with SATA 6 Gbit/s Max. 260 MB/s, with SATA 3 Gbit/s

Table 89: 5MMSSD.0180-00 - Technical data

Model number	5MMSSD.0180-00
IOPS [2]	
4k read	50000
4k write	
Typical	60000
Maximum	80000
Endurance	
MLC flash	Yes
Compatibility	SATA 3.0 compliant ACS-2 SSD Enhanced SMART ATA feature set Native Command Queuing (NCQ)
Environmental conditions	
Temperature	
Operation	0 to 70°C
Storage	-55 to 95°C
Transport	-55 to 95°C
Relative humidity	
Operation	5 to 95%, non-condensing
Storage	5 to 95%, non-condensing
Transport	5 to 95%, non-condensing
Vibration	
Operation	5 to 700 Hz: 2.17 g
Storage	5 to 800 Hz: 3.13 g
Transport	5 to 800 Hz: 3.13 g
Shock	
Operation	1500 g, 0.5 ms
Storage	1500 g, 0.5 ms
Transport	1500 g, 0.5 ms
Elevation	
Operation	-300 to 12192 m
Storage	-300 to 12192 m
Transport	-300 to 12192 m
Mechanical characteristics	
Dimensions	
Width	9.5 mm
Height	69 mm
Depth	100 mm
Weight	78 g
Manufacturer information	
Manufacturer	Intel
Manufacturer's product ID	SSDSC2CW180A3

Table 89: 5MMSSD.0180-00 - Technical data

1) Yes, although applies only if all components installed within the complete system have this certification and the complete system itself carries the corresponding mark.
2) IOPS: Random read and write input/output operations per second.

3.8.14.4 Temperature/Humidity diagram

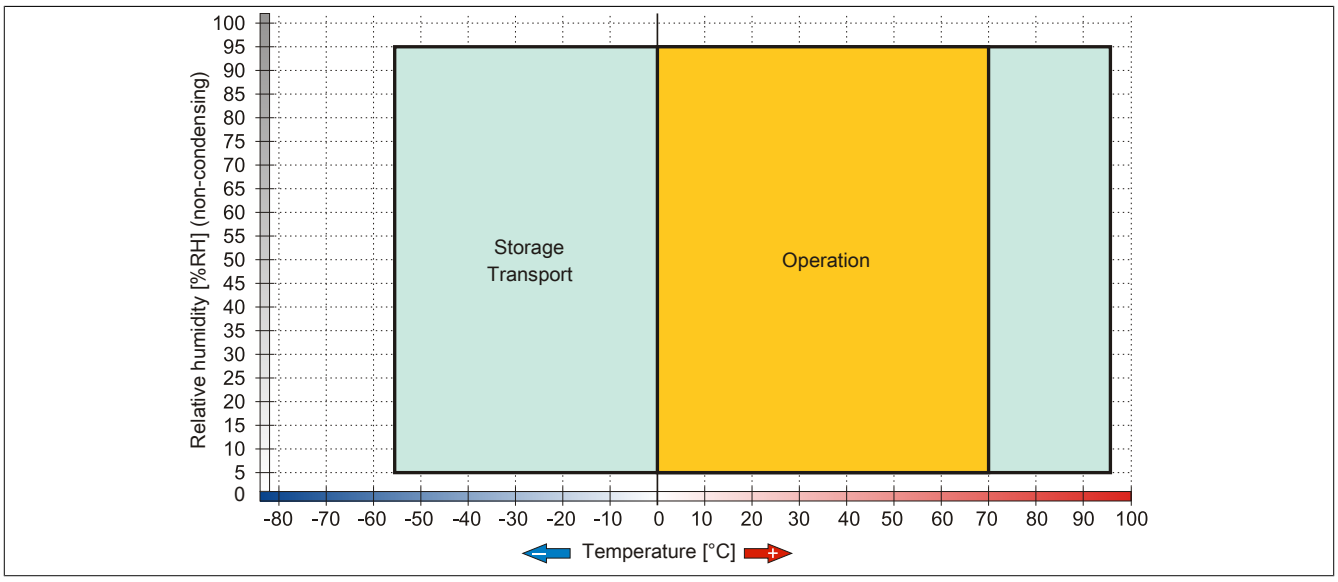

Figure 56: 5MMSSD.0180-00 - Temperature/Humidity diagram

3.8.15 5MMSSD.0256-00

3.8.15.1 General information

This 256 GB slide-in compact solid-state drive (SSD) is based on multi-level cell (MLC) technology and can be used as a replacement or accessory part.

- Replacement for 5AC801.SSDI-05 or 5AC901.CSSD-05 SSD drives
- Accessory for the APC510 (optional SSD for I/O board)

Information:

A drive can only be installed or replaced at B&R.

3.8.15.2 Order data

Model number	Short description	Figure
	Drives	
5MMSSD.0256-00	256 GB SSD MLC - Toshiba - SATA	

Table 90: 5MMSSD.0256-00 - Order data

3.8.15.3 Technical data

Caution!

A sudden power failure may result in data loss! In very rare cases, the mass storage device may also become damaged.

To prevent damage and loss of data, the use of a UPS is recommended.

Information:

The following characteristics, features and limit values only apply to this accessory and can deviate from those specified for the complete system. The data specifications for the complete system take precedence over those of individual components.

Model number	5MMSSD.0256-00	
Revision	**C0**	**D0**
General information		
Certification		
CE	Yes	
UL	cULus E115267 Industrial Control Equipment	
HazLoc	cULus HazLoc E180196 Industrial Control Equipment for Hazardous Locations Class I, Division 2, Groups ABCD[1)]	
Solid-state drive		
Capacity	256 GB	
Data reliability	<1 unrecoverable error in 10^{15} bit read accesses	
MTBF	1,500,000 hours	
S.M.A.R.T. support	Yes	
Interface	SATA	
Maintenance	None	
Sequential read	Max. 510 MB/s	
Sequential write	Max. 460 MB/s	
IOPS [2)]		
4k read	Max. 90,000 (random)	
4k write	Max. 35,000 (random)	
Endurance		
MLC flash	Yes	

Table 91: 5MMSSD.0256-00, 5MMSSD.0256-00 - Technical data

Model number	5MMSSD.0256-00	
Revision	**C0**	**D0**
Guaranteed data volume		
Guaranteed	148 TBW [3]	200 TBW [3]
Compatibility	SATA 3.0 compliant ACS-2 SSD Enhanced SMART ATA feature set Native Command Queuing (NCQ)	
Environmental conditions		
Temperature		
Operation	-30 to 85°C	-40 to 85°C
Storage	-40 to 85°C	
Transport	-40 to 85°C	
Relative humidity		
Operation	5 to 90%, non-condensing	
Storage	5 to 95%, non-condensing	
Transport	5 to 95%, non-condensing	
Vibration		
Operation	10 to 2000 Hz: 20 g	
Storage	10 to 2000 Hz: 20 g	
Transport	10 to 2000 Hz: 20 g	
Shock		
Operation	1500 g, 0.5 ms	
Storage	1500 g, 0.5 ms	
Transport	1500 g, 0.5 ms	
Elevation		
Operation	-300 to 12192 m	
Storage	-300 to 12192 m	
Transport	-300 to 12192 m	
Mechanical characteristics		
Dimensions		
Width	7 mm	
Height	69 mm	
Depth	100 mm	
Weight	78 g	
Manufacturer information		
Manufacturer	Toshiba	
Manufacturer's product ID	THNSNJ256WCST	THNSNJ256WCSU

Table 91: 5MMSSD.0256-00, 5MMSSD.0256-00 - Technical data

1) Yes, although applies only if all components installed within the complete system have this certification and the complete system itself carries the corresponding mark.
2) IOPS: Random read and write input/output operations per second.
3) TBW: Terabytes written.

3.8.15.4 Temperature/Humidity diagram

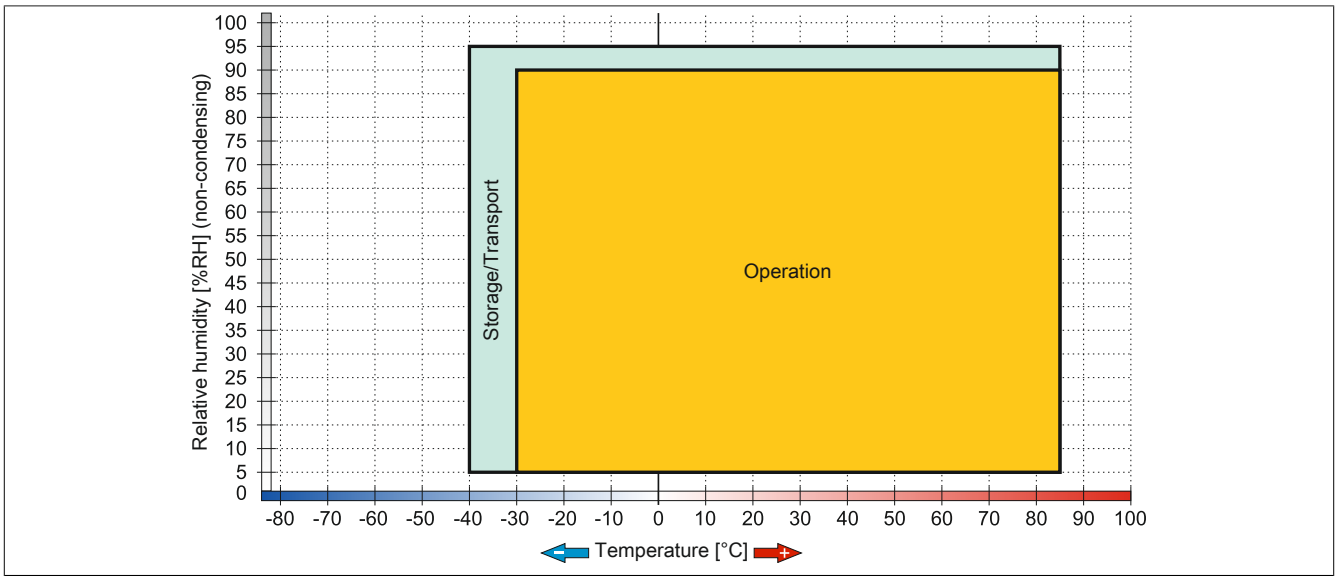

Figure 57: 5MMSSD.0256-00 ≤ C0 - Temperature/Humidity diagram

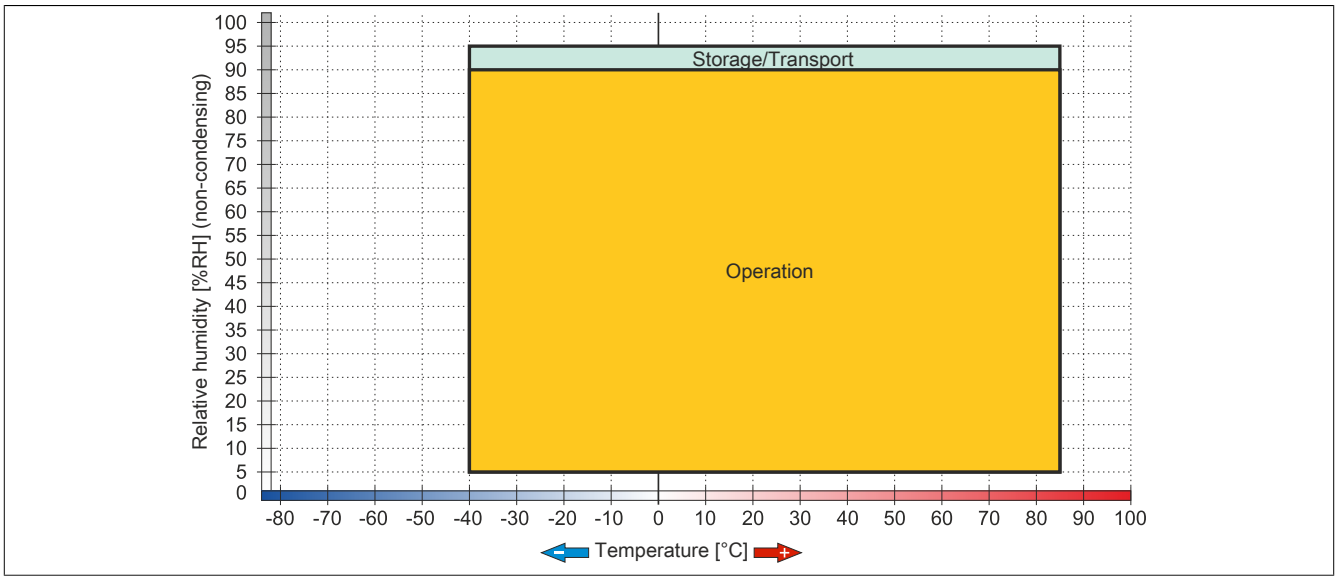

Figure 58: 5MMSSD.0256-00 ≥ D0 - Temperature/Humidity diagram

3.8.16 5MMSSD.0512-00

3.8.16.1 General information

This 512 GB slide-in compact solid-state drive (SSD) is based on multi-level cell (MLC) technology and can be used as a replacement or accessory part.

- Replacement drive for 5AC901.CSSD-06 solid-state drive

3.8.16.2 Order data

Model number	Short description	Figure
	Drives	
5MMSSD.0512-00	512 GB SSD MLC - Toshiba - SATA	

Table 92: 5MMSSD.0512-00 - Order data

3.8.16.3 Technical data

Caution!

A sudden power failure may result in data loss! In very rare cases, the mass storage device may also become damaged.

To prevent damage and loss of data, the use of a UPS is recommended.

Information:

The following characteristics, features and limit values only apply to this accessory and can deviate from those specified for the complete system. The data specifications for the complete system take precedence over those of individual components.

Model number	5MMSSD.0512-00
General information	
Certification	
CE	Yes
UL	cULus E115267 Industrial Control Equipment
HazLoc	cULus HazLoc E180196 Industrial Control Equipment for Hazardous Locations Class I, Division 2, Groups ABCD, T3C[1)]
GOST-R	Yes
Solid-state drive	
Capacity	512 GB
Data reliability	<1 unrecoverable error in 10^{15} bit read accesses
MTBF	1,500,000 hours
S.M.A.R.T. support	Yes
Interface	SATA
Maintenance	None
Sequential read	Max. 510 MB/s
Sequential write	Max. 460 MB/s
IOPS [2)]	
4k read	Max. 90,000 (random)
4k write	Max. 35,000 (random)
Endurance	
MLC flash	Yes
Guaranteed data volume	
Guaranteed	400 TBW [3)]
Compatibility	SATA 3.1 compliant ACS-2 SSD Enhanced SMART ATA feature set Native Command Queuing (NCQ)

Table 93: 5MMSSD.0512-00 - Technical data

Model number	5MMSSD.0512-00
Environmental conditions	
Temperature	
Operation	-40 to 85°C
Storage	-40 to 85°C
Transport	-40 to 85°C
Relative humidity	
Operation	5 to 90%, non-condensing
Storage	5 to 95%, non-condensing
Transport	5 to 95%, non-condensing
Vibration	
Operation	10 to 2000 Hz: 20 g
Storage	10 to 2000 Hz: 20 g
Transport	10 to 2000 Hz: 20 g
Shock	
Operation	1500 g, 0.5 ms
Storage	1500 g, 0.5 ms
Transport	1500 g, 0.5 ms
Elevation	
Operation	-300 to 12192 m
Storage	-300 to 12192 m
Transport	-300 to 12192 m
Mechanical characteristics	
Dimensions	
Width	7 mm
Height	69 mm
Depth	100 mm
Weight	78 g
Manufacturer information	
Manufacturer	Toshiba
Manufacturer's product ID	THNSNJ512WCSU

Table 93: 5MMSSD.0512-00 - Technical data

1) Yes, although applies only if all components installed within the complete system have this certification and the complete system itself carries the corresponding mark.
2) IOPS: Random read and write input/output operations per second.
3) TBW: Terabytes written.

3.8.16.4 Temperature/Humidity diagram

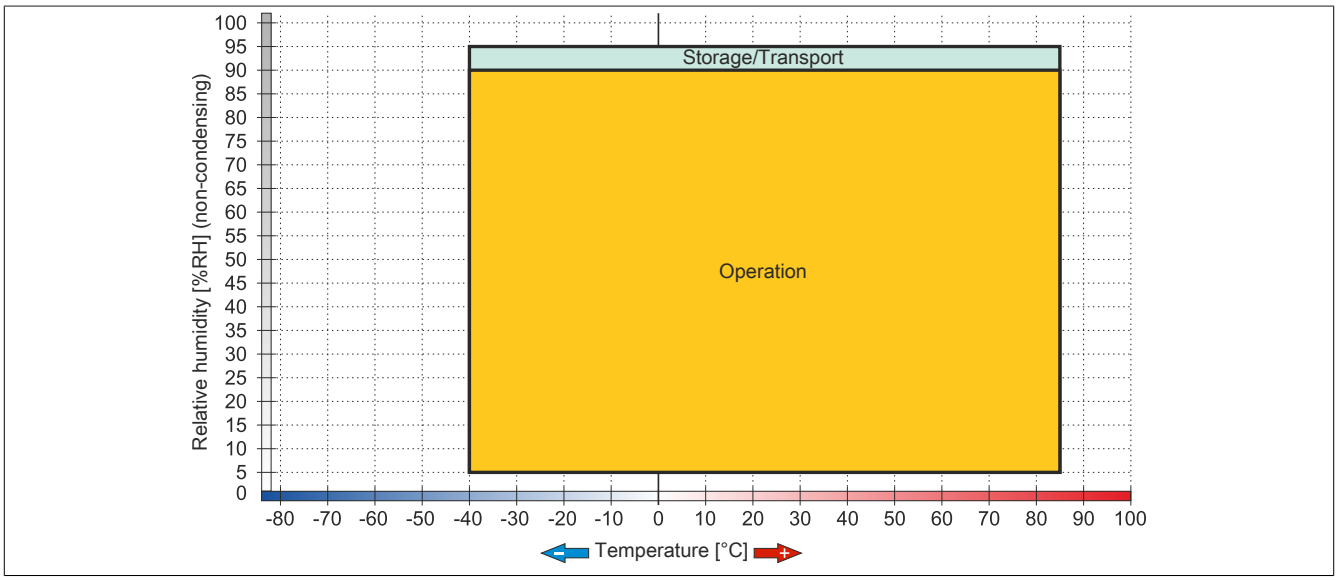

Figure 59: 5MMSSD.0512-00 - Temperature/Humidity diagram

3.8.17 5AC901.CCFA-00

3.8.17.1 General information

This CFast adapter is a slide-in compact adapter that allows a CFast card to be inserted and operated on a B&R Industrial PC. The CFast adapter can be used in APC910 and PPC900 system units.

- CFast slot
- Slide-in compact

3.8.17.2 Order data

Model number	Short description	Figure
	Drives	
5AC901.CCFA-00	CFast adapter - For slide-in compact slot	
	Optional accessories	
	CFast cards	
5CFAST.016G-00	CFast card, 16 GB SLC	
5CFAST.032G-00	CFast card, 32 GB SLC	
5CFAST.032G-10	CFast card, 32 GB MLC	
5CFAST.064G-10	CFast card, 64 GB MLC	
5CFAST.128G-10	CFast card, 128 GB MLC	
5CFAST.2048-00	CFast card, 2 GB SLC	
5CFAST.4096-00	CFast card, 4 GB SLC	
5CFAST.8192-00	CFast card, 8 GB SLC	

Table 94: 5AC901.CCFA-00 - Order data

3.8.17.3 Technical data

Caution!

A sudden power failure may result in data loss! In very rare cases, the mass storage device may also become damaged.

To prevent damage and loss of data, the use of a UPS is recommended.

Information:

The following characteristics, features and limit values only apply to this accessory and can deviate from those specified for the complete system. The data specifications for the complete system take precedence over those of individual components.

Model number	5AC901.CCFA-00
General information	
Certification	
CE	Yes
UL	cULus E115267 Industrial Control Equipment
HazLoc	cULus HazLoc E180196 Industrial Control Equipment for Hazardous Locations Class I, Division 2, Groups ABCD, T3C[1)]
GOST-R	Yes
Interfaces	
CFast slot	
Quantity	1
Environmental conditions	
Temperature	
Operation	Depends on the CFast card being used
Storage	Depends on the CFast card being used
Transport	Depends on the CFast card being used
Relative humidity	
Operation	Depends on the CFast card being used
Storage	Depends on the CFast card being used
Transport	Depends on the CFast card being used

Table 95: 5AC901.CCFA-00 - Technical data

1) Yes, although applies only if all components installed within the complete system have this certification and the complete system itself carries the corresponding mark.

3.8.18 5AC901.CHDD-99

3.8.18.1 General information

The slide-in compact kit can be used as a replacement part for slide-in compact drives (HDD/SSD). It consists of an extraction strip, plastic guide rails as well as the necessary screws.

Information:

If this slide-in compact kit is used with components (HDD/SDD) not approved by B&R, then B&R cannot make any guarantees regarding fit, form or function. In addition, B&R is not able to guarantee that the specifications, norms and certifications applicable to this device continue to apply.

3.8.18.2 Order data

Model number	Short description	Figure
	Drives	
5AC901.CHDD-99	Slide-in compact kit	

Table 96: 5AC901.CHDD-99 - Order data

3.8.19 5AC901.SDVW-00

3.8.19.1 General information

The DVD-R/RW slide-in drive can be used in APC910 system units and PPC800 bus units with a slide-in drive slot.

- DVD-R/RW, DVD+R/RW drive
- Slide-in

3.8.19.2 Order data

Model number	Short description	Figure
	Drives	
5AC901.SDVW-00	DVD drive - DVD-R/RW|DVD+R/RW - Slide-in	

Table 97: 5AC901.SDVW-00 - Order data

3.8.19.3 Technical data

Information:

The following characteristics, features and limit values only apply to this accessory and can deviate from those specified for the complete system. The data specifications for the complete system take precedence over those of individual components.

Model number	5AC901.SDVW-00
General information	
Certification	
CE	Yes
UL	cULus E115267 Industrial Control Equipment
HazLoc	cULus HazLoc E180196 Industrial Control Equipment for Hazardous Locations Class I, Division 2, Groups ABCD, T3C[1)]
DNV GL	Temperature: **B** (0 - 55°C) Humidity: **B** (up to 100%) Vibration: **A** (0.7g) EMC: **B** (Bridge and open deck)[2)]
GOST-R	Yes
CD / DVD drive	
Data buffer capacity	2 MB
Data transfer rate	Max. 33.3 MB/s
Speed	Max. 5160 rpm ±1%
Noise level	Approx. 45 dBA at a distance of 50 cm (full read access)
Compatible formats	CD-DA, CD-ROM mode 1/mode 2 CD-ROM XA mode 2 (form 1, form 2) Photo CD (single-/multi-session), Enhanced CD, CD text DVD-ROM, DVD-R, DVD-R (dual layer), DVD-RW, DVD-Video DVD-RAM (4.7 GB, 2.6 GB) DVD+R, DVD+R (dual layer), DVD+RW
Laser class	Class 1 laser
Service life	60000 POH (power-on hours)
Interface	SATA
Startup time	
CD	Max. 14 seconds (from 0 rpm to read operation)
DVD	Max. 15 seconds (from 0 rpm to read operation)
Access time	
CD	On average 140 ms (24x)
DVD	On average 150 ms (8x)
Readable media	
CD	CD/CD-ROM (12 cm, 8 cm), CD-R, CD-RW
DVD	DVD-ROM, DVD-R, DVD-R (dual layer), DVD-RW. DVD-RAM, DVD+R, DVD+R (dual layer), DVD+RW, DVD-RAM

Table 98: 5AC901.SDVW-00 - Technical data

Model number	5AC901.SDVW-00
Writable media	
CD	CD-R, CD-RW
DVD	DVD-R/RW, DVD-R (dual layer), DVD-RAM (4.7 GB), DVD+R/RW, DVD+R (dual layer)
Read speed	
CD	24x
DVD	8x
Write speed	
CD-R	24x, 16x, 10x and 4x
CD-RW	24x, 16x, 10x and 4x
DVD+R	8x, 4x and 2.4x
DVD+R (dual layer)	6x, 4x and 2.4x
DVD+RW	4x and 2x
DVD-R	8x, 4x and 2x
DVD-R (dual layer)	6x, 4x and 2x
DVD-RAM [3]	5x, 3x and 2x
DVD-RW	6x, 4x and 2x
Write methods	
CD	Disk at once, session at once, packet write, track at once
DVD	Disk at once, incremental, overwrite, sequential, multi-session
Environmental conditions	
Temperature [4]	
Operation	5 to 55°C [5]
Storage	-20 to 60°C
Transport	-40 to 65°C
Relative humidity	
Operation	8 to 80%, non-condensing
Storage	5 to 95%, non-condensing
Transport	5 to 95%, non-condensing
Vibration	
Operation	5 to 500 Hz: 0.2 g
Storage	5 to 500 Hz: 2 g
Transport	5 to 500 Hz: 2 g
Shock	
Operation	At max. 5 g and 11 ms duration
Storage	At max. 60 g and 11 ms duration At max. 200 g and 2 ms duration
Transport	At max. 60 g and 11 ms duration At max. 200 g and 2 ms duration
Mechanical characteristics	
Dimensions	
Width	22 mm
Height	172.5 mm
Depth	150 mm
Weight	400 g

Table 98: 5AC901.SDVW-00 - Technical data

1) Yes, although applies only if all components installed within the complete system have this certification and the complete system itself carries the corresponding mark.
2) Yes, although applies only if all components installed within the complete system have this certification.
3) RAM drivers are not provided by the manufacturer. Support of RAM function by "Nero" burning software (model number 5SWUTI.0000-00) or other burning software packages or drivers from third-party providers.
4) Temperature specifications refer to operation at 500 meters. The maximum ambient temperature is typically derated by 1°C per 1000 meters (starting at 500 meters above sea level).
5) Surface temperature of drive.

3.8.19.4 Temperature/Humidity diagram

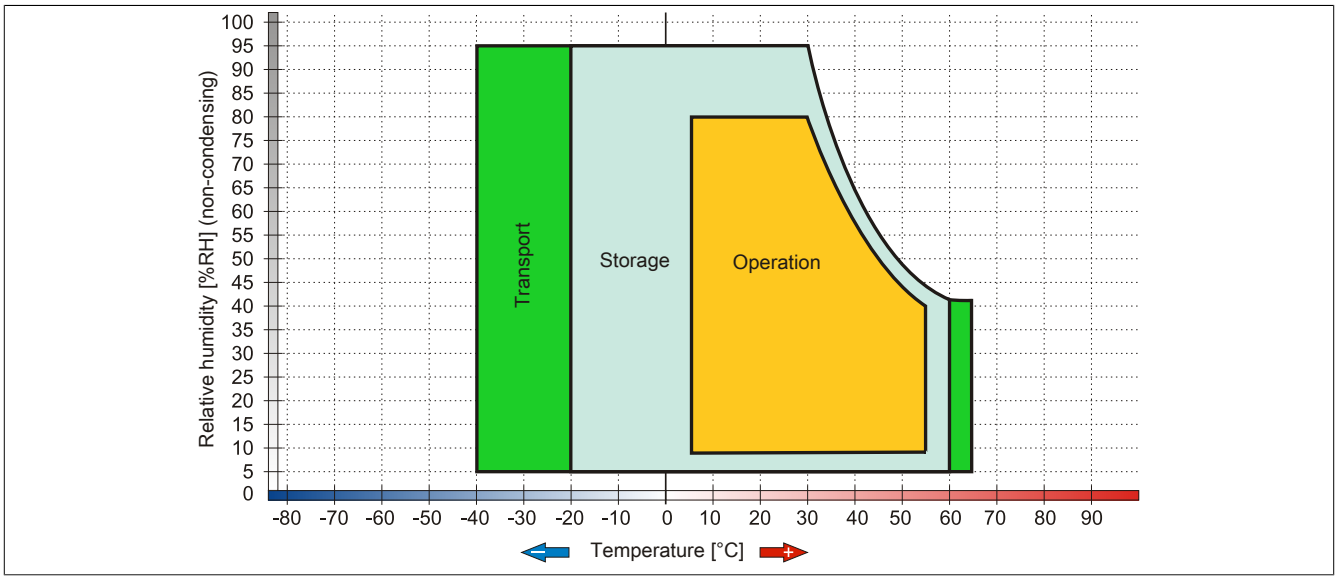

Figure 60: 5AC901.SDVW-00 - Temperature/Humidity diagram

3.8.20 5AC901.SSCA-00

3.8.20.1 General information

The slide-in compact adapter is a slide-in adapter that allows a slide-in compact drive to be installed and operated on a B&R Industrial PC. The slide-in compact adapter can be used in APC910 system units and PPC900 bus units.

- Slide-in compact slot
- Slide-in

3.8.20.2 Order data

Model number	Short description	Figure
	Drives	
5AC901.SSCA-00	Slide-in compact adapter - For slide-in compact drives	
	Optional accessories	
	Drives	
5AC901.CCFA-00	CFast adapter - For slide-in compact slot	
5AC901.CHDD-01	500 GB hard disk - Slide-in compact - SATA	
5AC901.CSSD-00	32 GB SSD SLC - Slide-in compact - SATA	
5AC901.CSSD-03	60 GB SSD MLC - Slide-in compact - SATA	
5AC901.CSSD-04	128 GB SSD MLC - Slide-in compact - SATA	
5AC901.CSSD-05	256 GB SSD MLC - Slide-in compact - Toshiba - SATA	
5AC901.CSSD-06	512 GB SSD MLC - Slide-in compact - Toshiba - SATA	

Table 99: 5AC901.SSCA-00 - Order data

3.8.20.3 Technical data

Caution!

A sudden power failure may result in data loss! In very rare cases, the mass storage device may also become damaged.

To prevent damage and loss of data, the use of a UPS is recommended.

Information:

The following characteristics, features and limit values only apply to this accessory and can deviate from those specified for the complete system. The data specifications for the complete system take precedence over those of individual components.

Model number	5AC901.SSCA-00
General information	
Certification	
CE	Yes
UL	cULus E115267 Industrial Control Equipment
HazLoc	cULus HazLoc E180196 Industrial Control Equipment for Hazardous Locations Class I, Division 2, Groups ABCD, T3C[1)]
DNV GL	Temperature: **B** (0 - 55°C) Humidity: **B** (up to 100%) Vibration: **A** (0.7g) EMC: **B** (Bridge and open deck)[2)]
GOST-R	Yes
Inserts	
Slide-in compact drives	1
Environmental conditions	
Temperature	
Operation	Depends on the slide-in compact drive being used
Storage	Depends on the slide-in compact drive being used
Transport	Depends on the slide-in compact drive being used
Relative humidity	
Operation	Depends on the slide-in compact drive being used
Storage	Depends on the slide-in compact drive being used
Transport	Depends on the slide-in compact drive being used

Table 100: 5AC901.SSCA-00 - Technical data

1) Yes, although applies only if all components installed within the complete system have this certification and the complete system itself carries the corresponding mark.
2) Yes, although applies only if all components installed within the complete system have this certification.

3.8.21 5ACPCI.RAIC-06

3.8.21.1 General information

This SATA RAID controller supports RAID level 0 and 1 and can be inserted in a PCI slot. The 500 GB hard disks that are used are specified for 24-hour operation (24x7).

- SATA RAID controller
- RAID level 0 (striped) and 1 (mirrored)
- 2x 500 GB SATA hard disks (suitable for 24-hour operation)
- Only requires 1 PCI slot
- Transfer rates up to 150 MB/s

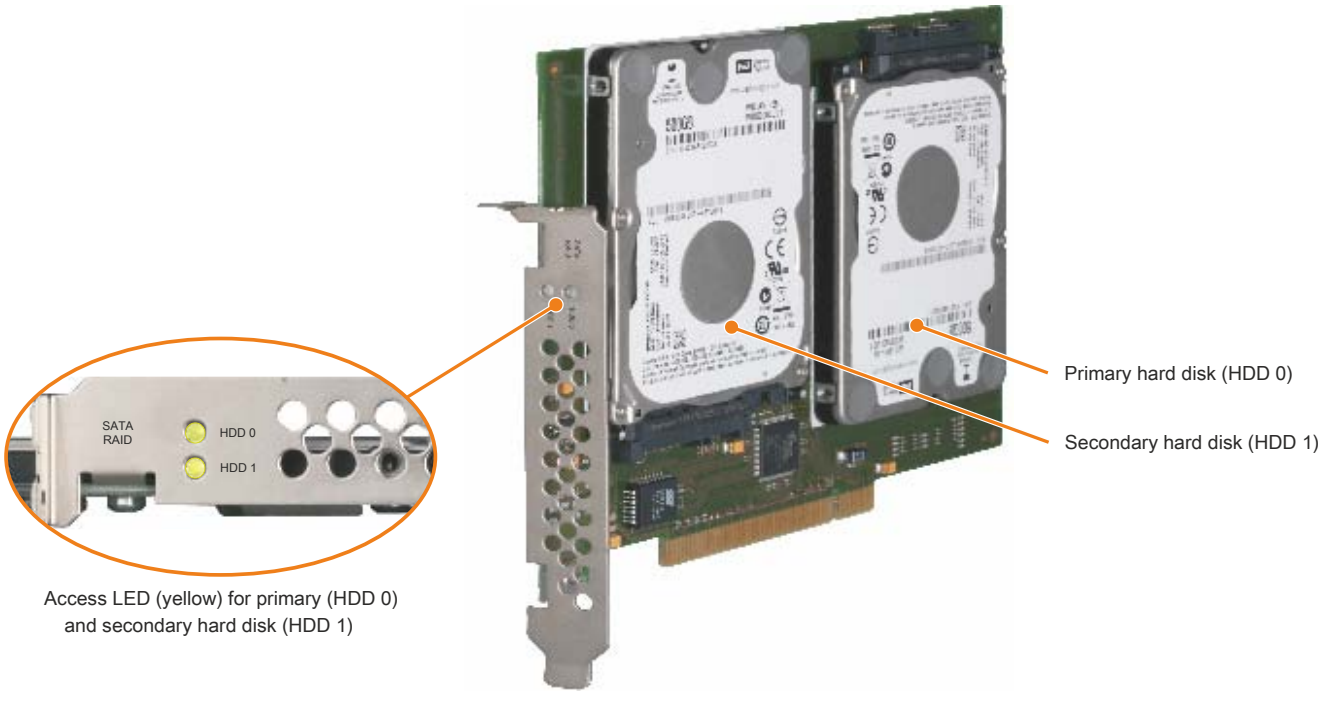

Figure 61: PCI SATA RAID controller

Information:

The PCI SATA RAID controller cannot be used in place of a universal power supply (UPS). If the operating system is not shut down properly, then this will be detected as an error state (with RAID 1 sets) at the next system startup and a complete rebuild is performed. If 500 GB of memory are used, this generally takes approximately 500 minutes (configurable) to complete.

3.8.21.2 Order data

Model number	Short description	Figure
	Drives	
5ACPCI.RAIC-06	PCI RAID System 2x 500 GB - SATA	
	Optional accessories	
	Drives	
5MMHDD.0500-00	500 GB hard disk - SATA	

Table 101: 5ACPCI.RAIC-06 - Order data

3.8.21.3 Technical data

Information:

The following characteristics, features and limit values only apply to this accessory and can deviate from those specified for the complete system. The data specifications for the complete system take precedence over those of individual components.

Model number	5ACPCI.RAIC-06
General information	
Capacity	2x 500 GB
Number of hard disks	2
Certification	
CE	Yes
UL	cULus E115267 Industrial Control Equipment
HazLoc	cULus HazLoc E180196 Industrial Control Equipment for Hazardous Locations Class I, Division 2, Groups ABCD[1)]
GOST-R	Yes
Controller	
Type	SiI 3512 SATA link
Specification	Serial ATA 1.0
Data transfer rate	Max. 1.5 Gbit/s (150 MB/s)
RAID level	Supports RAID 0, 1
BIOS extension ROM requirements	Approx. 32 kB
Hard disk drive [2)]	
Capacity	500 GB
Number of heads	2
Number of sectors	976,773,168
Bytes per sector	512 (logical) / 4096 (physical)
Cache	16 MB
Speed	5400 rpm ±0.2%
Startup time	Typ. 3.5 s (from 0 rpm to read access)
Service life	5 years
MTBF	1,000,000 POH [3)]
S.M.A.R.T. support	Yes
Interface	SATA
Access time	5.5 ms
Supported transfer modes	SATA II
Data transfer rate	
Internal	Max. 147 MB/s
To/From host	Max. 150 Mbit/s (SATA I), max. 300 Mbit/s (SATA II)
Positioning time	
Nominal (read only)	11 ms
Maximum (read only)	21 ms
Environmental conditions	
Temperature [4)]	
Operation [5)]	0 to 60°C
24-hour operation [6)]	0 to 60°C
Storage	-40 to 70°C
Transport	-40 to 70°C
Relative humidity [7)]	
Operation	8 to 90%, non-condensing
Storage	5 to 95%, non-condensing
Transport	5 to 95%, non-condensing
Vibration [8)]	
Operation (continuous)	5 to 500 Hz: 0.125 g, no unrecoverable errors
Operation (occasional)	5 to 500 Hz: 0.25 g, no unrecoverable errors
Storage	10 to 500 Hz: 5 g, no unrecoverable errors
Transport	10 to 500 Hz: 5 g, no unrecoverable errors
Shock	
Operation	200 g and 2 ms duration, no unrecoverable errors
Storage	1000 g and 2 ms duration, no unrecoverable errors
Transport	1000 g and 2 ms duration, no unrecoverable errors
Elevation	
Operation	-305 to 3048 m
Storage	-305 to 12192 m
Mechanical characteristics	
Installation	Fixed [9)]

Table 102: 5ACPCI.RAIC-06 - Technical data

Model number	5ACPCI.RAIC-06
Weight	350 g
Manufacturer information	
Manufacturer	Western Digital
Manufacturer's product ID	WD5000LUCT

Table 102: 5ACPCI.RAIC-06 - Technical data

1) Yes, although applies only if all components installed within the complete system have this certification and the complete system itself carries the corresponding mark.
2) Technical data for a hard disk.
3) With 8760 POH (power-on hours) per year and 25°C surface temperature.
4) Temperature values at an elevation of 305 meters. The temperature specification must be reduced linearly by 1°C every 305 meters. The temperature is permitted to increase or decrease by a maximum of 20°C per hour.
5) Standard operation refers to 333 POH (power-on hours) per month.
6) 24-hour operation refers to 732 POH (power-on hours) per month.
7) Humidity gradient: Maximum 20% per hour.
8) Operation in areas prone to vibration and shock can affect performance negatively (reduction of transfer rate).
9) PCI slot installation.

3.8.21.4 Temperature/Humidity diagram

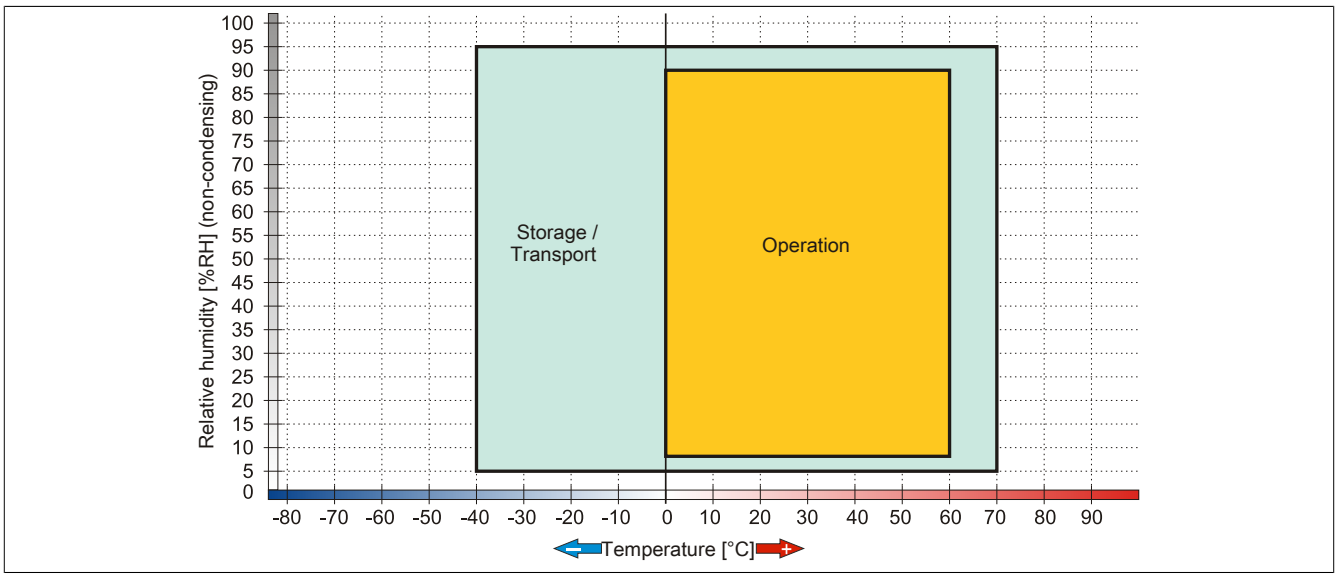

Figure 62: 5ACPCI.RAIC-06 - Temperature/Humidity diagram

3.8.21.5 Driver support

Special drivers are necessary for operating the PCI SATA RAID controller. Drivers for supported and approved operating systems are available in the Downloads section of the B&R website (www.br-automation.com).

.NET-based SATA Raid™ serial ATA RAID management software can also be found on the B&R website.

Information:

Required drivers must be downloaded from the B&R website only, not from manufacturer websites.

3.8.21.6 Configuration

For information about configuring a SATA RAID set, see chapter 3 "Installation", section 5 "Configuring a SATA RAID set" on page 202.

3.8.21.7 Replacing a HDD

A hard drive can be easily replaced in the event of an error when using the RAID1 (mirroring) configuration without having to reinstall the system. The 500 GB 5MMHDD.0500-00 SATA HDD is available as a replacement hard disk.

For information about replacing a drive, see "Replacing a PCI SATA RAID hard disk in a RAID 1 set" on page 402.

3.9 Interface options

Information:

Please note that not every interface option can be installed in interface slots 1 and 2. For more information, see "IF option 1 slot" on page 61 and "IF option 2 slot" on page 61.

Information:

For information about installing or replacing an interface option, please refer to the section "Installing interface options" on page 379.

Depending on the IF option being used, it may be necessary to load the default settings in BIOS Setup after replacement or installation (see "Save & Exit" on page 272).

Information:

Please note that not every interface option can be installed in interface slots 1 and 2. For more information, see "IF option 1 slot" on page and "IF option 2 slot" on page .

Information:

For information about installing or replacing an interface option, please refer to the section "Installing the interface option" on page .

Depending on the IF option being used, it may be necessary to load the default settings in BIOS Setup after replacement or installation (see "Save & Exit" on page 272).

Information:

Please note that not every interface option can be installed in interface slots 1 and 2. For more information, see "IF Option 1 slot" on page and "IF Option 2 slot" on page .

Information:

For information about installing or replacing an interface option, please refer to the section "Installing the interface option" on page .

Depending on the IF option being used, it may be necessary to load the default settings in BIOS Setup after replacement or installation (see "Save & Exit" on page 272).

3.9.1 5AC901.I485-00

3.9.1.1 General information

The 5AC901.I485-00 interface option is equipped with an RS232/RS422/RS485 interface. The operating mode (RS232/RS422/RS485) is selected automatically depending on the electrical connection.

- 1x RS232/422/485 interface
- Compatible with the APC910 and PPC900

3.9.1.2 Order data

Model number	Short description	Figure
	Interface options	
5AC901.I485-00	Interface card - 1x RS232/422/485 interface - For APC910/PPC900	

Table 103: 5AC901.I485-00 - Order data

3.9.1.3 Technical data

Information:

The following characteristics, features and limit values only apply to this accessory and can deviate from those specified for the complete system. The data specifications for the complete system take precedence over those of individual components.

Model number	5AC901.I485-00
General information	
B&R ID code	0xD84A
Certification	
CE	Yes
UL	cULus E115267 Industrial Control Equipment
HazLoc	cULus HazLoc E180196 Industrial Control Equipment for Hazardous Locations Class I, Division 2, Groups ABCD, T3C[1)]
DNV GL	Temperature: **B** (0 - 55°C) Humidity: **B** (up to 100%) Vibration: **A** (0.7g) EMC: **B** (Bridge and open deck)[2)]
GOST-R	Yes
Interfaces	
COM	
Type	RS232/RS422/RS485, electrically isolated
Design	9-pin, male, DSUB connector
UART	16550-compatible, 16-byte FIFO
Max. baud rate	115 kbit/s
Terminating resistor	Yes
Electrical characteristics	
Power consumption	1 W
Environmental conditions	
Temperature	
Operation	0 to 55°C [3)]
Storage	-20 to 60°C
Transport	-20 to 60°C
Relative humidity	
Operation	5 to 90%, non-condensing
Storage	5 to 95%, non-condensing
Transport	5 to 95%, non-condensing
Mechanical characteristics	
Weight	Approx. 34 g

Table 104: 5AC901.I485-00 - Technical data

1) Yes, although applies only if all components installed within the complete system have this certification and the complete system itself carries the corresponding mark.
2) Yes, although applies only if all components installed within the complete system have this certification.
3) Detailed information can be found in the temperature tables in the user's manual.

3.9.1.3.1 Pinout

COM serial interface			
	RS232	RS422/485	9-pin, male, DSUB connector 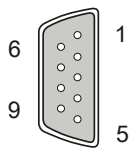
Type	RS232, not modem-capable, electrically isolated		
UART	16550-compatible, 16-byte FIFO		
Transfer rate	Max. 115 kbit/s		
Bus length	Max. 15 m	Max. 1200 m	
Pin	**RS232 - Pinout**	**RS422 - Pinout**	
1	N/C	TXD\	
2	RXD	N/C	
3	TXD	N/C	
4	N/C	TXD	
5	GND	GND	
6	N/C	RXD\	
7	RTS	N/C	
8	CTS	N/C	
9	N/C	RXD	

Table 105: COM - Pinout

3.9.1.3.2 I/O address and IRQ

Slot	I/O address	IRQ
IF option 1 (COM E)	2E8h - 2EFh	10
IF option 2 (COM F)	228h - 22Fh	7

Table 106: I/O address and IRQ

3.9.1.3.3 RS232 - Bus length and cable type

The maximum transfer rate of 115 kbit/s depends on the cable type being used.

Extension	Transfer rate
≤15 m	Typ. 64 kbit/s
≤10 m	Typ. 115 kbit/s
≤5 m	Typ. 115 kbit/s

Table 107: RS232 - Bus length and transfer rate

The material used for the cable should have all or most of the following properties in order to achieve an optimal transfer rate.

RS232 cables	Property
Signal lines	
Cable cross section	4x 0.16 mm² (26 AWG), tinned copper stranded wire
Wire insulation	PE
Conductor resistance	≤82 Ω/ km
Stranding	Wires stranded in pairs
Shield	Paired shield with aluminum foil
Grounding line	
Cable cross section	1x 0.34 mm² (22 AWG / 19), tinned copper stranded wire
Wire insulation	PE
Conductor resistance	≤59 Ω/km
Outer sheathing	
Material	PUR mixture
Features	Halogen-free
Complete shielding	From tinned copper wires

Table 108: RS232 - Cable requirements

3.9.1.3.4 RS422 - Bus length and cable type

The RTS line must be switched on to switch the transmitter to active.

The maximum transfer rate of 115 kbit/s depends on the type of cable being used.

Extension	Transfer rate
1200 m	Typ. 115 kbit/s

Table 109: RS422 - Bus length and transfer rate

The material used for the cable should have all or most of the following properties in order to achieve an optimal transfer rate.

RS422 cable	Property
Signal lines	
Cable cross section	4x 0.25 mm² (24 AWG / 19), tinned copper stranded wire
Wire insulation	PE
Conductor resistance	≤82 Ω/km
Stranding	Wires stranded in pairs
Shield	Paired shield with aluminum foil
Grounding line	
Cable cross section	1x 0.34 mm² (22 AWG / 19), tinned copper stranded wire
Wire insulation	PE
Conductor resistance	≤59 Ω/km
Outer sheathing	
Material	PUR mixture
Features	Halogen-free
Complete shielding	From tinned copper wires

Table 110: RS422 - Cable requirements

3.9.1.3.5 When operated as an RS485 interface

When operated in this mode, the pins of the RS422 default interface (1, 4, 6 and 9) must be used. Pins should be connected as shown.

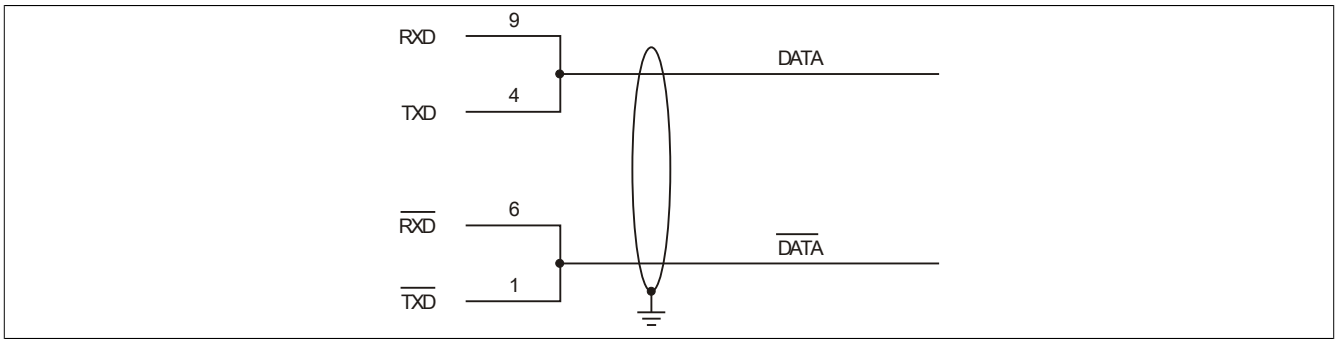

Figure 63: RS232/RS422/RS485 interface - Operation in RS485 mode

The RTS line must be switched by the driver for each transmission or reception; there is no automatic switch-back mechanism. This cannot be configured in Windows.

The voltage drop resulting from long cable lengths can lead to greater potential differences between bus stations, which can hinder communication. This can be improved by running ground wire with the others.

The line ends of the RS485 interface should (at least for longer line lengths or larger transfer rates) be closed. Normally, a passive terminator can be used on the bus ends by connecting each of the signal lines with a 120 Ω resistor.

3.9.1.3.6 RS485 - Bus length and cable type

The maximum transfer rate of 115 kbit/s depends on the type of cable being used.

Extension	Transfer rate
1200 m	Typ. 115 kbit/s

Table 111: RS485 - Bus length and transfer rate

The material used for the cable should have all or most of the following properties in order to achieve an optimal transfer rate.

RS485 cables	Property
Signal lines	
Cable cross section	4x 0.25 mm² (24 AWG / 19), tinned copper stranded wire
Wire insulation	PE
Conductor resistance	≤82 Ω/km
Stranding	Wires stranded in pairs
Shield	Paired shield with aluminum foil
Grounding line	
Cable cross section	1x 0.34 mm² (22 AWG / 19), tinned copper stranded wire
Wire insulation	PE
Conductor cross section	≤59 Ω/km
Outer sheathing	
Material	PUR mixture
Features	Halogen-free
Complete shielding	From tinned copper wires

Table 112: RS485 - Cable requirements

3.9.1.3.7 Terminating resistor

A terminating resistor for the serial interface is already integrated in the IF option. There is a switch to activate or deactivate the terminating resistor, but the system unit needs to be opened in order to reach it. An active terminating resistor is indicated by a yellow LED.

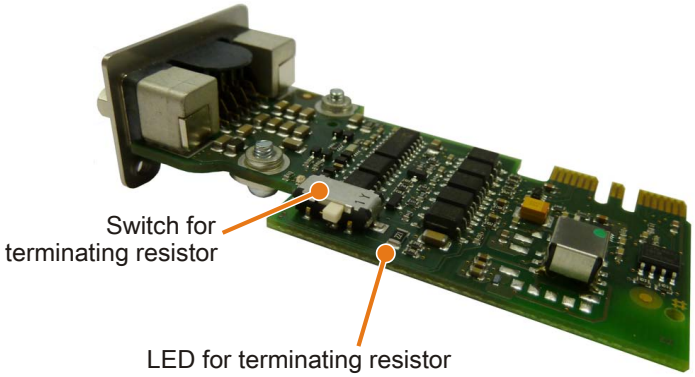

Figure 64: 5AC901.I485-00 - Terminating resistor

3.9.2 5AC901.ICAN-00

3.9.2.1 General information

The 5AC901.ICAN-00 interface option is equipped with a CAN bus master interface.

- 1x CAN bus master interface
- Compatible with the APC910 and PPC900

It is not possible to operate two 5AC901.ICAN interface options (in the IF option 1 and IF option 2 slots) at the same time.

3.9.2.2 Order data

Model number	Short description	Figure
	Interface options	
5AC901.ICAN-00	Interface card - 1x CAN interface - For APC910/PPC900	

Table 113: 5AC901.ICAN-00 - Order data

3.9.2.3 Technical data

Information:

The following characteristics, features and limit values only apply to this accessory and can deviate from those specified for the complete system. The data specifications for the complete system take precedence over those of individual components.

Model number	5AC901.ICAN-00
General information	
B&R ID code	0xD84B
Certification	
CE	Yes
UL	cULus E115267 Industrial Control Equipment
HazLoc	cULus HazLoc E180196 Industrial Control Equipment for Hazardous Locations Class I, Division 2, Groups ABCD, T3C[1)]
DNV GL	Temperature: **B** (0 - 55°C) Humidity: **B** (up to 100%) Vibration: **A** (0.7g) EMC: **B** (Bridge and open deck)[2)]
GOST-R	Yes
Interfaces	
CAN	
Quantity	1
Controller	Bosch CC770 (compatible with Intel 82527 CAN controller)
Design	DSUB, 9-pin, male, electrically isolated
Transfer rate	Max. 1 Mbit/s
Terminating resistor	Yes
Electrical characteristics	
Power consumption	1 W
Environmental conditions	
Temperature	
Operation	0 to 55°C [3)]
Storage	-20 to 60°C
Transport	-20 to 60°C

Table 114: 5AC901.ICAN-00 - Technical data

Model number	5AC901.ICAN-00
Relative humidity	
Operation	5 to 90%, non-condensing
Storage	5 to 95%, non-condensing
Transport	5 to 95%, non-condensing
Mechanical characteristics	
Weight	Approx. 33 g

Table 114: 5AC901.ICAN-00 - Technical data

1) Yes, although applies only if all components installed within the complete system have this certification and the complete system itself carries the corresponding mark.
2) Yes, although applies only if all components installed within the complete system have this certification.
3) Detailed information can be found in the temperature tables in the user's manual.

3.9.2.3.1 - Pinout

CAN bus		
Type	Electrically isolated	9-pin, male, DSUB connector 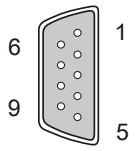
Transfer rate	Max. 1 Mbit/s	
Bus length	Max. 1000 meters	
Pin	**Assignment**	
1	N/C	
2	CAN LOW	
3	GND	
4	N/C	
5	N/C	
6	Reserved	
7	CAN HIGH	
8	N/C	
9	N/C	

Table 115: 5AC901.ICAN-00 - Pinout

3.9.2.3.2 I/O address and IRQ

Resource	Default setting	Function
I/O address	384h (address register)	Defines the register number to access.
	385h (data register)	Access to the register defined in the address register.
IRQ	IRQ10	Interrupt

Table 116: I/O address and IRQ

1) Resource allocation for the interface option 1 and 2 slots is the same.

3.9.2.3.3 CAN - Bus length and cable type

The type of cable to be used depends largely on the required bus length and number of nodes. The bus length is determined by the bit rate. In accordance with CiA (CAN in Automation), the maximum bus length is 1000 meters.

The following bus lengths are permitted with a maximum oscillator tolerance of 0.121%:

Extension	Transfer rate
≤1000 m	Typ. 50 kbit/s
≤200 m	Typ. 250 kbit/s
≤100 m	Typ. 500 kbit/s
≤20 m	Typ. 1 Mbit/s

Table 117: CAN - Bus length and transfer rate

The material used for the cable should have all or most of the following properties in order to achieve an optimal transfer rate.

CAN cable	Property
Signal lines	
Cable cross section	2x 0.25 mm² (24 AWG / 19), tinned copper stranded wire
Wire insulation	PE
Conductor resistance	≤82 Ω/ km
Stranding	Wires stranded in pairs
Shield	Paired shield with aluminum foil
Grounding line	
Cable cross section	1x 0.34 mm² (22 AWG / 19), tinned copper stranded wire
Wire insulation	PE
Conductor resistance	≤59 Ω/km
Outer sheathing	
Material	PUR mixture
Features	Halogen-free
Complete shielding	From tinned copper wires

Table 118: CAN cable requirements

3.9.2.3.4 CAN driver settings

The baud rate can be set in Automation Studio either with predefined values or with the bit timing register. More information on this can be found in Automation Help.

Bit timing register 1	Bit timing register 0	Baud rate
00h	14h	1000 kbit/s
80h or 00h	1Ch	500 kbit/s
81h or 01h	1Ch	250 kbit/s
83h or 03h	1Ch	125 kbit/s
84h or 04h	1Ch	100 kbit/s
89h or 09h	1Ch	50 kbit/s

Table 119: CAN driver settings

3.9.2.3.5 Terminating resistor

A terminating resistor for the CAN interface is already integrated in the IF option. There is a switch to activate or deactivate the terminating resistor, but the system unit needs to be opened in order to reach it. An active terminating resistor is indicated by a yellow LED.

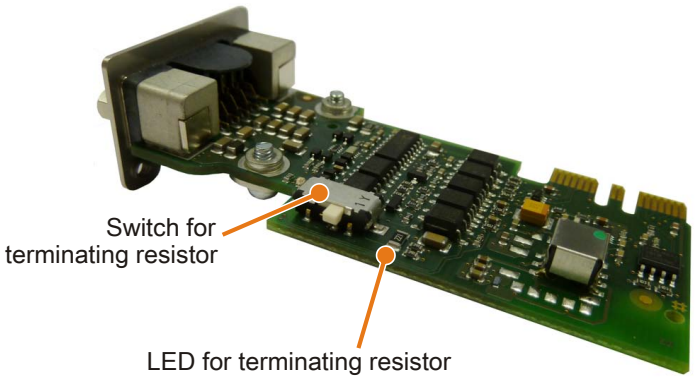

Figure 65: 5AC901.ICAN-00 - Terminating resistor

3.9.2.3.6 Drivers

The CAN IF option is supported in PVI for Windows XP Professional and Windows Embedded Standard 2009. The 5AC901.ICAN-00 interface option is no longer supported by PVI V4.2.5 or Windows CAN Driver V3.0 beginning with Windows 7.

3.9.3 5AC901.IHDA-00

3.9.3.1 General information

The 5AC901.IHDA-00 interface option has an HDA sound chip with externally accessible MIC, Line IN and Line OUT channels.

- 1x MIC
- 1x Line IN
- 1x Line OUT
- Compatible with the APC910 and PPC900

The 5AC901.IHDA-00 interface option can only be operated in the IF option 1 slot.

3.9.3.2 Order data

Model number	Short description	Figure
	Interface options	
5AC901.IHDA-00	Interface card - 1x audio interface (1x MIC/1x Line In/1x OUT) - For APC910/PPC900	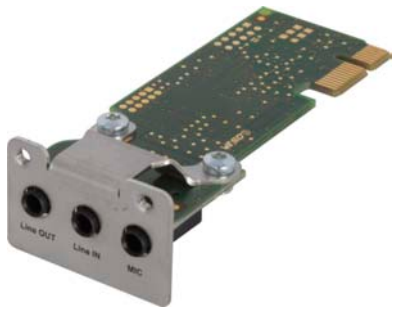

Table 120: 5AC901.IHDA-00 - Order data

3.9.3.3 Technical data

Information:

The following characteristics, features and limit values only apply to this accessory and can deviate from those specified for the complete system. The data specifications for the complete system take precedence over those of individual components.

Model number	5AC901.IHDA-00
General information	
B&R ID code	0xD84E
Certification	
CE	Yes
UL	cULus E115267 Industrial Control Equipment
HazLoc	cULus HazLoc E180196 Industrial Control Equipment for Hazardous Locations Class I, Division 2, Groups ABCD, T3C[1)]
DNV GL	Temperature: **B** (0 - 55°C) Humidity: **B** (up to 100%) Vibration: **A** (0.7g) EMC: **B** (Bridge and open deck)[2)]
GOST-R	Yes
Interfaces	
Audio	
Type	HDA sound
Controller	Realtek ALC 662
Inputs	Microphone, Line IN
Outputs	Line OUT
Electrical characteristics	
Power consumption	0.4 W
Environmental conditions	
Temperature	
Operation	0 to 55°C [3)]
Storage	-20 to 60°C
Transport	-20 to 60°C

Table 121: 5AC901.IHDA-00 - Technical data

Model number	5AC901.IHDA-00
Relative humidity	
Operation	5 to 90%, non-condensing
Storage	5 to 95%, non-condensing
Transport	5 to 95%, non-condensing
Mechanical characteristics	
Weight	Approx. 21 g

Table 121: 5AC901.IHDA-00 - Technical data

1) Yes, although applies only if all components installed within the complete system have this certification and the complete system itself carries the corresponding mark.
2) Yes, although applies only if all components installed within the complete system have this certification.
3) Detailed information can be found in the temperature tables in the user's manual.

3.9.3.3.1 Pinout

MIC, Line IN, Line OUT		
Controller	Realtek ALC 662	3.5 mm female connector
MIC	Connection of a mono microphone with a 3.5 mm jack	
Line IN	Stereo Line IN signal supplied via a 3.5 mm jack	
Line OUT	Connection of a stereo playback device (e.g. amplifier) via a 3.5 mm jack	

Table 122: 5AC901.IHDA-00 - Pinout

A special driver is required to operate the audio controller. Drivers for approved operating systems are available in the Downloads section of the B&R website (www.br-automation.com).

Information:

Required drivers must be downloaded from the B&R website only, not from manufacturer websites.

3.9.4 5AC901.ISRM-00

3.9.4.1 General information

The 5AC901.ISRM-00 interface option has 2 MB SRAM.

- 2 MB SRAM
- Compatible with the APC910 and PPC900

The 5AC901.ISRM-00 interface option can only be operated in the IF option 2 slot.

> **Information:**
>
> **When writing, reading or accessing the SRAM, "non-aligned accesses" are not supported by the AVLON bus (internal bus in the PCI Express core).**

3.9.4.2 Order data

Model number	Short description	Figure
	Interface options	
5AC901.ISRM-00	Interface cards - 2 MB SRAM - For APC910/PPC900	

Table 123: 5AC901.ISRM-00 - Order data

3.9.4.3 Technical data

> **Information:**
>
> **The following characteristics, features and limit values only apply to this accessory and can deviate from those specified for the complete system. The data specifications for the complete system take precedence over those of individual components.**

Model number	5AC901.ISRM-00
General information	
B&R ID code	0xD850
Certification	
CE	Yes
UL	cULus E115267 Industrial Control Equipment
HazLoc	cULus HazLoc E180196 Industrial Control Equipment for Hazardous Locations Class I, Division 2, Groups ABCD, T3C[1)]
GOST-R	Yes
Controller	
SRAM	
Size	2 MB
Battery-backed	Yes
Remanent variables in power failure mode	256 kB (e.g. for Automation Runtime, see the AS help system)
Electrical characteristics	
Power consumption	2 W
Environmental conditions	
Temperature	
Operation	0 to 55°C [2)]
Storage	-20 to 60°C
Transport	-20 to 60°C

Table 124: 5AC901.ISRM-00 - Technical data

Model number	5AC901.ISRM-00
Relative humidity	
Operation	5 to 90%, non-condensing
Storage	5 to 95%, non-condensing
Transport	5 to 95%, non-condensing
Mechanical characteristics	
Weight	Approx. 20 g

Table 124: 5AC901.ISRM-00 - Technical data

1) Yes, although applies only if all components installed within the complete system have this certification and the complete system itself carries the corresponding mark.
2) Detailed information can be found in the temperature tables in the user's manual.

3.9.5 5AC901.IPLK-00

3.9.5.1 General information

The 5AC901.IPLK-00 interface option is equipped with 1 POWERLINK interface and 2 MB SRAM.

- 1x POWERLINK interface managing or controlled node
- 2 MB SRAM
- Compatible with the APC910 and PPC900

The 5AC901.IPLK-00 interface option can only be operated in the IF option 2 slot.

> **Information:**
>
> **When writing, reading or accessing the SRAM, "non-aligned accesses" are not supported by the AVLON bus (internal bus in the PCI Express core).**

3.9.5.2 Order data

Model number	Short description	Figure
	Interface options	
5AC901.IPLK-00	Interface card - 1x POWERLINK interface - 2 MB SRAM - For APC910/PPC900	

Table 125: 5AC901.IPLK-00 - Order data

3.9.5.3 Technical data

> **Information:**
>
> **The following characteristics, features and limit values only apply to this accessory and can deviate from those specified for the complete system. The data specifications for the complete system take precedence over those of individual components.**

Model number	5AC901.IPLK-00
General information	
B&R ID code	0xE025
Certification	
CE	Yes
UL	cULus E115267 Industrial Control Equipment
HazLoc	cULus HazLoc E180196 Industrial Control Equipment for Hazardous Locations Class I, Division 2, Groups ABCD, T3C[1)]
Controller	
SRAM	
Size	2 MB
Battery-backed	Yes
Remanent variables in power failure mode	256 kB (e.g. for Automation Runtime, see the AS help system)
Interfaces	
POWERLINK	
Quantity	1
Transmission	100BASE-TX
Type	Type 4 [2)]
Design	Shielded RJ45
Transfer rate	100 Mbit/s
Cable length	Max. 100 m between two stations (segment length)
Electrical characteristics	
Power consumption	1.5 W
Environmental conditions	
Temperature	
Operation	0 to 55°C [3)]
Storage	-20 to 60°C
Transport	-20 to 60°C

Table 126: 5AC901.IPLK-00 - Technical data

Model number	5AC901.IPLK-00
Relative humidity	
Operation	5 to 90%, non-condensing
Storage	5 to 95%, non-condensing
Transport	5 to 95%, non-condensing
Mechanical characteristics	
Weight	Approx. 35 g

Table 126: 5AC901.IPLK-00 - Technical data

1) Yes, although applies only if all components installed within the complete system have this certification and the complete system itself carries the corresponding mark.
2) More information is available in the Automation Studio help system (Communication - POWERLINK - General information - Hardware - IF / LS).
3) Detailed information can be found in the temperature tables in the user's manual.

3.9.5.3.1 - Pinout

LEDs are integrated on the interface option.

POWERLINK				
Cabling			S/STP (Cat 5e)	RJ45, female 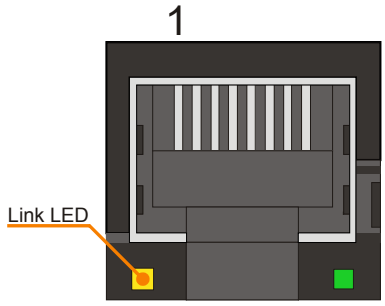
Cable length			Max. 100 m (min. Cat5e)	
LED	**Color**	**Status**	**Function**	
Link LED	Yellow	On	Link (POWERLINK network connection available)	
		Off	Activity (blinking - data transfer in progress)	

Table 127: 5AC901.IPLK-00 - POWERLINK interface

3.9.5.3.2 Status/Error LED

The Status/Error LED is a green and red dual LED. The LED status can have different meanings depending on the operating mode.

Status/Error LED

POWERLINK - Status/Error LED				
LED	**Color**	**Status**	**Function**	RJ45, female 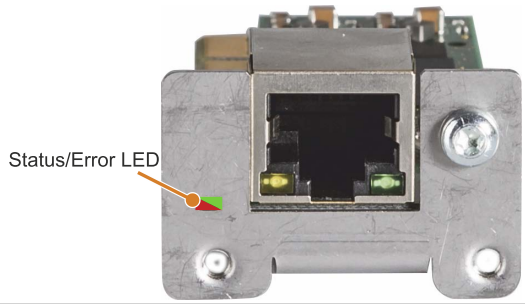
Status/Error LED	Green-Red	On	POWERLINK Status/Error LED, see 3.9.5.3.2 "Status/Error LED"	
		Off	POWERLINK Status/Error LED, see 3.9.5.3.2 "Status/Error LED"	

Table 128: 5AC901.IPLK-00 - POWERLINK Status/Error LED

Ethernet mode

In this mode, the interface is operated as an Ethernet interface.

Green - Status	Description
On	Interface being operated as an Ethernet interface

Table 129: Status/Error LED - Ethernet mode

POWERLINK

Red - Error	Description
On	The interface is in an error state (failed Ethernet frames, increased number of collisions on the network, etc.). If an error occurs in the following states, then the green LED blinks over the red LED: • BASIC_ETHERNET • PRE_OPERATIONAL_1 • PRE_OPERATIONAL_2 • READY_TO_OPERATE 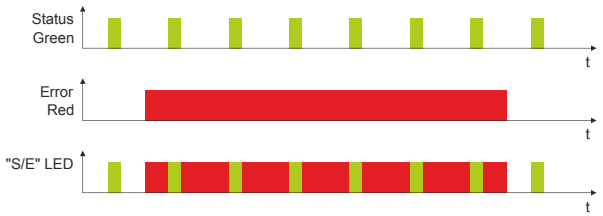

Table 130: Status/Error LED - POWERLINK - Error

Green - Status	Description
Off NOT_ACTIVE	**State** The interface is in the NOT_ACTIVE state or: • Switched off • Starting up • Not configured correctly in Automation Studio • Defective **Managing node (MN)** The bus is being monitored for POWERLINK frames. If a frame is not received within the configured time window (timeout), the interface switches immediately to PRE_OPERATIONAL_1 mode (single flash). If POWERLINK communication is detected before the time expires, however, then the MN will not be started. **Controlled node (CN)** The bus is being monitored for POWERLINK frames. If a corresponding frame is not received within the defined time frame (timeout), then the module switches immediately to BASIC_ETHERNET mode (flickering). If POWERLINK communication is detected before this time expires, however, the interface switches immediately to PRE_OPERATIONAL_1 mode (single flash).
Flickering green (approx. 10 Hz) BASIC_ETHERNET	**State** The interface is in the BASIC_ETHERNET state and being operated as an Ethernet TCP/IP interface. **Managing node (MN)** This state can only be exited by resetting the interface. **Controlled node (CN)** If POWERLINK communication is detected while in this state, the interface switches to the PRE_OPERATIONAL_1 state (single flash).
Single flash (approx. 1 Hz) PRE_OPERATIONAL_1	**State** The interface is in the PRE_OPERATIONAL_1 state. **Managing node (MN)** The MN starts "reduced cycle" operation. Cyclic communication is not yet taking place. **Controlled node (CN)** The module can be configured by the MN in this state. The CN waits until it receives an SoC frame and then switches to the PRE_OPERATIONAL_2 state (double flash). An LED lit red in this state indicates failure of the MN.

Table 131: Status/Error LED - POWERLINK - Status

Green - Status	Description
Double flash (approx. 1 Hz) PRE_OPERATIONAL_2	**State** The interface is in the PRE_OPERATIONAL_2 state. **Managing node (MN)** The MN begins cyclic communication (cyclic input data is not yet being evaluated). The CNs are configured in this state. **Controlled node (CN)** The interface can be configured by the MN in this state. A command then switches the state to READY_TO_OPERATE (triple flash). An LED lit red in this mode indicates failure of the MN.
Triple flash (approx. 1 Hz) READY_TO_OPERATE	**State** The interface is in the READY_TO_OPERATE state. **Managing node (MN)** Cyclic and asynchronous communication is taking place. Any received PDO data is ignored. **Controlled node (CN)** The configuration of the module is completed. Normal cyclic and asynchronous communication is taking place. The PDO data being sent corresponds to the PDO mapping. Cyclic data is not yet being evaluated, however. An LED lit red in this mode indicates failure of the MN.
On OPERATIONAL	**State** The interface is in the OPERATIONAL state. PDO mapping is active and cyclic data is being evaluated.
Blinking (approx. 2.5 Hz) STOPPED	**State** The interface is in the STOPPED state. **Managing node (MN)** This status is not possible for the MN. **Controlled node (CN)** No output data is being produced, and no input data is being received. It is only possible to enter or leave this mode after the MN has given the appropriate command.

Table 131: Status/Error LED - POWERLINK - Status

System stop error codes

Incorrect configuration or defective hardware can cause a system stop error.

The error code is indicated by the red Error LED using four switch-on phases. Each switch-on phase has a duration of either 150 ms or 600 ms. The error code is repeated every 2 seconds.

Error description	Error code indicated by red Status LED									
RAM error: The interface is defective and must be replaced.	•	•	•	-	Pause	•	•	•	-	Pause
Hardware error: The interface or a system component is defective and must be replaced.	-	•	•	-	Pause	-	•	•	-	Pause

Table 132: System stop error codes

Key	•	...150 ms
	–	...600 ms
	Pause	2 second delay

3.9.5.3.3 Drivers

The POWERLINK IF option is supported by Automation Runtime beginning with the following versions:

- AR Upgrade AR H4.10
- Automation Studio V4.1.x.x

3.9.6 5AC901.IRDY-00

3.9.6.1 General information

The 5AC901.IRDY-00 ready relay is switched as soon as the B&R Industrial PC has booted and all internal supply voltages are applied. Additional devices can also be connected to the ready relay, which are then also switched on when the B&R Industrial PC boots.

- 1 normally closed contact, 1 normally open contact
- Compatible with the APC910 and PPC900

The 0TB2104.8000 terminal block is not included and must be ordered separately.

3.9.6.2 Order data

Model number	Short description	Figure
	Interface options	
5AC901.IRDY-00	Interface card - Ready relay - For APC910/PPC900	
	Required accessories	
	Terminal blocks	
0TB2104.8000	Connector 24 VDC - 4-pin female - Screw clamps 2.5 mm²	

Table 133: 5AC901.IRDY-00 - Order data

3.9.6.3 Technical data

Information:

The following characteristics, features and limit values only apply to this accessory and can deviate from those specified for the complete system. The data specifications for the complete system take precedence over those of individual components.

Model number	5AC901.IRDY-00
General information	
B&R ID code	0xD84F
Ready relay	Normally open contact and normally closed contact, max. 30 VDC, max. 2 A
Certification	
CE	Yes
UL	cULus E115267 Industrial Control Equipment
Electrical characteristics	
Power consumption	0.2 W
Environmental conditions	
Temperature	
Operation	0 to 55°C [1)]
Storage	-20 to 60°C
Transport	-20 to 60°C
Relative humidity	
Operation	5 to 90%, non-condensing
Storage	5 to 95%, non-condensing
Transport	5 to 95%, non-condensing
Mechanical characteristics	
Weight	Approx. 30 g

Table 134: 5AC901.IRDY-00 - Technical data

1) Detailed information can be found in the temperature tables in the user's manual.

3.9.6.3.1 Pinout

Ready relay			
Pin	**Assignment**	**Description**	4-pin male connector
1	NO	Normally open contact	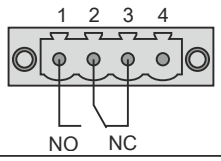
2	COM	Changeover contact	
3	NC	Normally closed contact	
4	-	Not connected	

Table 135: 5AC901.IRDY-00 - Pinout

3.9.7 5AC901.ISIO-00

3.9.7.1 General information

The ready relay function of the 5AC901.ISIO-00 IF option can be controlled using the MTCX. Corresponding commands must be issued via the MTCX to switch the ready relay.

In addition to the ready relay function, the reset button, power button and power LED on the APC910 or PPC900 can be made accessible externally.

Unlike the 5AC901.IRDY-00 IF option, the 5AC901.ISIO-00 ready relay is not automatically switched on and off if the power supply to the PC is connected or disconnected.

The maximum cable length for connecting the reset button, power button and power LED is 2 m.

- Connections for the reset button and power button on the PC
- Connection for the power LED on the PC
- 1 normally closed contact and 1 normally open contact on the ready relay
- Controlling the ready relay functions using MTCX commands
- Compatible with the APC910 and PPC900

3.9.7.2 Order data

Model number	Short description	Figure
	Interface options	
5AC901.ISIO-00	Interface card - System I/O - For APC910/PPC900	

Table 136: 5AC901.ISIO-00 - Order data

3.9.7.3 Technical data

Information:

The following characteristics, features and limit values only apply to this accessory and can deviate from those specified for the complete system. The data specifications for the complete system take precedence over those of individual components.

Model number	5AC901.ISIO-00
General information	
B&R ID code	0xE674
Ready relay	Normally open contact and normally closed contact, max. 30 VDC, max. 1 A
Certification	
CE	Yes
UL	cULus E115267 Industrial Control Equipment
Electrical characteristics	
Power consumption	0.5 W
Environmental conditions	
Temperature	
Operation	0 to 55°C [1]
Storage	-20 to 60°C
Transport	-20 to 60°C
Relative humidity	
Operation	5 to 90%, non-condensing
Storage	5 to 95%, non-condensing
Transport	5 to 95%, non-condensing
Mechanical characteristics	
Weight	Approx. 30 g

Table 137: 5AC901.ISIO-00 - Technical data

1) Detailed information can be found in the temperature tables in the user's manual.

3.9.7.4 Pinout

Ready relay		
Max. cable length	Max. 2 meters	9-pin female DSUB connector 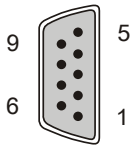
Pin	**Assignment**	
1	Output (power) LED - Green	
2	Output (power) LED - Red	
3	GND	
4	Input - Power button	
5	Input - Reset button	
6	Normally open contact	
7	Normally closed contact	
8	GND	
9	COM, changeover contact	

Table 138: 5AC901.ISIO-00 - Pinout

Details about the power LED can be found in section "LED status indicators" on page 63.

Details about the power and reset buttons can be found in section "Power button" on page 64.

Details about the power LED can be found in section "LED status indicators" on page .

Details about the power and reset buttons can be found in section "Power button" on page .

3.9.7.5 Firmware

In order to guarantee the functionality of the interface option, at least the following firmware version (MTCX) must be installed on the PC:

- Automation PC 910: V1.13
- Panel PC 900: V1.15

This firmware can be downloaded from the B&R website (www.br-automation.com).

Information about firmware upgrades can be found in section "Firmware upgrade" on page 285.

3.9.7.6 Connection example

Information:

Series resistors for the LEDs are already installed on the interface option.

The LED outputs are dimensioned for a typical LED current of 3.5 mA.

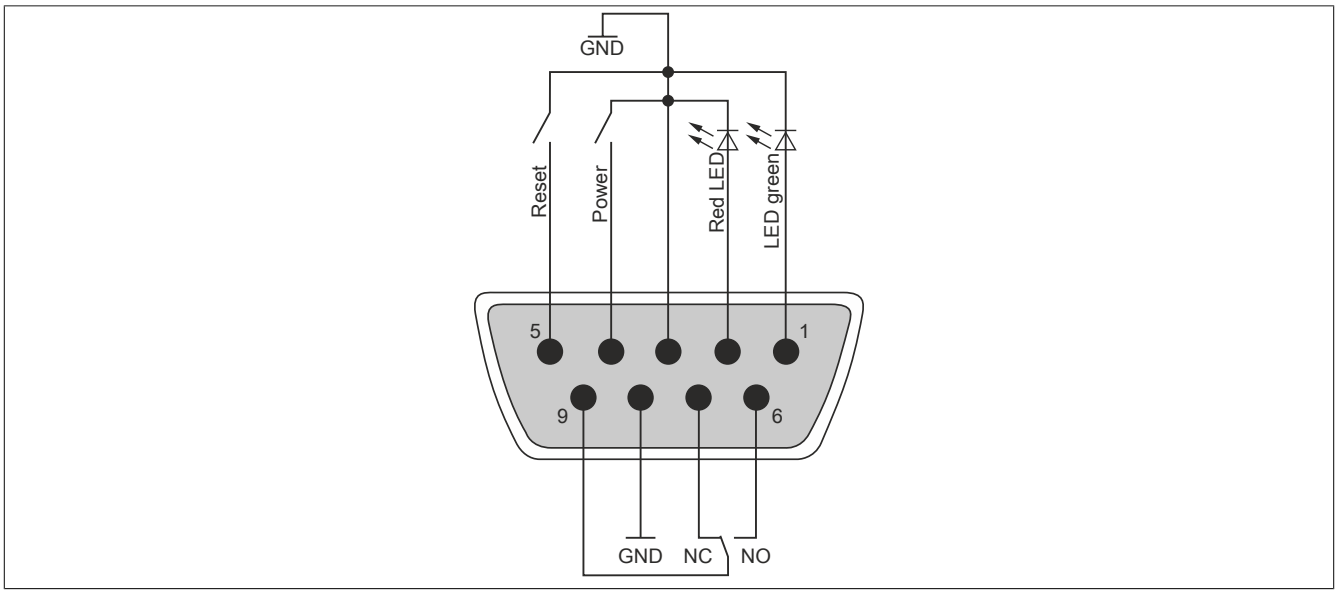

Figure 66: 5AC901.ISIO-00 - Connection example

3.9.8 5AC901.IETH-00

3.9.8.1 General information

Interface option 5AC901.IETH-00 is equipped with a 10/100/1000 BASE-T Ethernet interface.

- 1x 10/100/1000 BASE-T Ethernet interface
- Compatible with the APC910 and PPC900

Interface option 5AC901.IETH-00 can only be operated in the IF option 2 slot.

3.9.8.2 Order data

Model number	Short description	Figure
	Interface options	
5AC901.IETH-00	Interface card - 1x ETH 10/100/1000 - For APC910/PPC900	

Table 139: 5AC901.IETH-00 - Order data

3.9.8.3 Technical data

Information:

The following characteristics, features and limit values only apply to this individual component and can deviate from those specified for the complete system. For the complete system in which this individual component is used, refer to the data given specifically for that device.

Model number	5AC901.IETH-00
General information	
B&R ID code	EC3C
Diagnostics	
Data transfer	Yes, using LED status indicators
Interfaces	
Ethernet	
Quantity	1
Controller	Intel I210
Design	Shielded RJ45
Transfer rate	10/100/1000 Mbit/s [1)]
Cable length	Max. 100 m between two stations (segment length)
Electrical characteristics	
Power consumption	1 W
Environmental conditions	
Temperature	
Operation	0 to 55°C
Storage	-20 to 60°C
Transport	-20 to 60°C
Relative humidity	
Operation	5 to 90%, non-condensing
Storage	5 to 95%, non-condensing
Transport	5 to 95%, non-condensing
Mechanical characteristics	
Weight	Approx. 35 g

Table 140: 5AC901.IETH-00 - Technical data

1) Switching takes place automatically.

3.9.8.3.1 Pinout

LEDs are integrated on the interface option.

Ethernet interface (ETH[1])			
Controller	Intel I210		RJ45, female 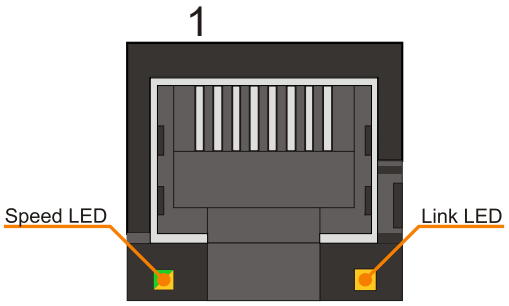
Cabling	S/STP (Cat 5e)		
Transfer rate	10/100/1000 Mbit/s[2]		
Cable length	Max. 100 m (min. Cat5e)		
Speed LED	**On**	**Off**	
Green	100 Mbit/s	10 Mbit/s[3]	
Orange	1000 Mbit/s	-	
Link LED	**On**	**Off**	
Orange	Link (Ethernet network connection available)	Activity (blinking - data transfer in progress)	

Table 141: 5AC901.IETH-00 - Ethernet interface

1) The interfaces, etc. available on the device or module have been numbered as such for easy identification. This numbering may differ from that used by the particular operating system.
2) Switching takes place automatically.
3) The 10 Mbit/s transfer speed / connection only exists if the Link LED is also lit at the same time.

3.9.8.3.2 Driver support

A special driver is required in order to operate the Intel I210 Ethernet controller. Drivers for approved operating systems are available in the Downloads section of the B&R website www.br-automation.com. Approved operating systems include Windows 7, Windows 10 IoT Enterprise 2015 and B&R Debian 8.
Wake-on-LAN (WoL) and PXE booting are not supported.

Information:

Required drivers must be downloaded from the B&R website only, not from manufacturer websites.

3.10 Monitor/Panel options

Information:

Monitor/Panel options can only be connected to system units with 2 or 5 PCI/PCIe slots.

Information:

For information about installing or replacing a monitor/panel option, please refer to the section "Installing monitor/panel options" on page 382.

After replacement or installation, it may be necessary to load the setup defaults in BIOS (see "Save & Exit" on page 272).

3.10.1 5AC901.LDPO-00

3.10.1.1 General information

The 5AC901.LDPO-00 monitor/panel option is equipped with a DisplayPort 1.1 and a USB 2.0 interface.

- DisplayPort interface
- USB 2.0 port
- Installation compatible with APC910

3.10.1.2 Order data

Model number	Short description	Figure
	Monitor/Panel options	
5AC901.LDPO-00	DisplayPort transmitter	

Table 142: 5AC901.LDPO-00 - Order data

3.10.1.3 Technical data

Information:

The following characteristics, features and limit values only apply to this accessory and can deviate from those specified for the complete system. The data specifications for the complete system take precedence over those of individual components.

Model number	5AC901.LDPO-00
General information	
B&R ID code	0xD852
Certification	
CE	Yes
UL	cULus E115267 Industrial Control Equipment
GOST-R	Yes
Interfaces	
USB	
Quantity	1
Type	USB 2.0
Design	Type A
Transfer rate	Low speed (1.5 Mbit/s), full speed (12 Mbit/s), high speed (480 Mbit/s)
Current-carrying capacity	Max. 1 A
DisplayPort	
Quantity	1
Version	1.1
Electrical characteristics	
Power consumption	0.2 W

Table 143: 5AC901.LDPO-00 - Technical data

Model number	5AC901.LDPO-00
Environmental conditions	
Temperature	
Operation	0 to 55°C [1]
Storage	-20 to 60°C
Transport	-20 to 60°C
Relative humidity	
Operation	5 to 90%, non-condensing
Storage	5 to 95%, non-condensing
Transport	5 to 95%, non-condensing
Mechanical characteristics	
Weight	Approx. 26 g

Table 143: 5AC901.LDPO-00 - Technical data

1) Detailed information can be found in the temperature tables in the user's manual.

3.10.1.3.1 DisplayPort interface

DisplayPort 1.1	
The following overview lists the video signals available on the DisplayPort 1.1 output.	
Monitor/Panel option	**Video signals with all system unit variants**
5AC901.LDPO-00	DisplayPort, DVI, HDMI

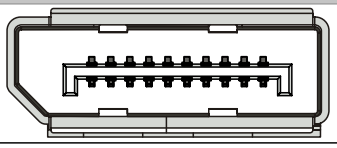

Table 144: DisplayPort interface

Information:

The hardware and graphics drivers of approved operating systems support the hot plugging of display devices to the DisplayPort interface for service purposes. The DisplayPort connector is specified for 10,000 connection cycles.

3.10.1.3.2 DisplayPort - Pinout

Pin	Signal	Description	Pin	Signal	Description
1	DP_LANE0+	DisplayPort lane 0 (positive)	11	GND	Ground
2	GND	Ground	12	DP_LANE3-	DisplayPort lane 3 (negative)
3	DP_LANE0-	DisplayPort lane 0 (negative)	13	CONFIG1	Configuration pin 1 (connected to ground)
4	DP_LANE1+	DisplayPort lane 1 (positive)	14	CONFIG2	Configuration pin 2 (connected to ground)
5	GND	Ground	15	DP_AUX+	Auxiliary channel (positive)
6	DP_LANE1-	DisplayPort lane 1 (negative)	16	GND	Ground
7	DP_LANE2+	DisplayPort lane 2 (positive)	17	DP_AUX-	Auxiliary channel (negative)
8	GND	Ground	18	DP_HPD#	Hot plug detect
9	DP_LANE2-	DisplayPort lane 2 (negative)	19	RETURN	Return for power
10	DP_LANE3+	DisplayPort lane 3 (positive)	20	DP_PWR	Power for connector

DisplayPort, 20-pin, female

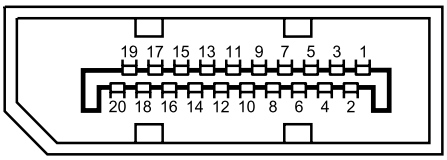

Table 145: DisplayPort - Pinout

3.10.2 5AC901.LSDL-00

3.10.2.1 General information

The 5AC901.LSDL-00 monitor/panel option is equipped with a monitor/panel interface for connecting additional panels via SDL or DVI.

- SDL/DVI interface
- Installation compatible with APC910

3.10.2.2 Order data

Model number	Short description	Figure
	Monitor/Panel options	
5AC901.LSDL-00	SDL/DVI transmitter	

Table 146: 5AC901.LSDL-00 - Order data

3.10.2.3 Technical data

Information:

The following characteristics, features and limit values only apply to this accessory and can deviate from those specified for the complete system. The data specifications for the complete system take precedence over those of individual components.

Model number	5AC901.LSDL-00
General information	
B&R ID code	0xD853
Certification	
CE	Yes
UL	cULus E115267 Industrial Control Equipment
DNV GL	Temperature: **B** (0 - 55°C) Humidity: **B** (up to 100%) Vibration: **A** (0.7g) EMC: **B** (Bridge and open deck)[1]
GOST-R	Yes
Interfaces	
Monitor/Panel interface	
Design	DVI-D
Type	SDL/DVI
Electrical characteristics	
Power consumption	1 W
Environmental conditions	
Temperature	
Operation	0 to 55°C [2]
Storage	-20 to 60°C
Transport	-20 to 60°C
Relative humidity	
Operation	5 to 90%, non-condensing
Storage	5 to 95%, non-condensing
Transport	5 to 95%, non-condensing
Mechanical characteristics	
Weight	Approx. 45 g

Table 147: 5AC901.LSDL-00 - Technical data

1) Yes, although applies only if all components installed within the complete system have this certification.
2) Detailed information can be found in the temperature tables in the user's manual.

3.10.2.3.1 Monitor/Panel interface

Monitor/Panel interface - SDL (Smart Display Link) / DVI	
The following overview lists the video signals available on the monitor/panel output.	
Monitor/Panel option	**Video signals**
5AC901.LSDL-00	SDL, DVI

Table 148: Monitor/Panel interface - SDL, DVI

Information:

The hardware and graphics drivers of approved operating systems support the hot plugging of display devices to the monitor/panel interface for service purposes. The monitor/panel connector is specified for 100 connection cycles.

Information:

If a display device with touch screen is connected to the monitor/panel interface and then disconnected again during operation (hot plugging), it may be necessary to recalibrate the touch screen.

3.10.2.3.2 USB communication in SDL and DVI mode

Information:

The USB transfer rate is limited to USB 1.1 in SDL mode.

In DVI mode, the maximum USB transfer rate is determined by the USB interface and USB hub on the display device.

3.10.2.3.3 Pinout

Pin	Assignment	Description	Pin	Assignment	Description
1	TMDS data 2-	DVI lane 2 (negative)	16	HPD	Hot plug detect
2	TMDS data 2+	DVI lane 2 (positive)	17	TMDS data 0-	DVI lane 0 (negative)
3	TMDS data 2/4 SHIELD	Shield for data pair 2 and 4	18	TMDS data 0+	DVI lane 0 (positive)
4	SDL-	SDL lane (negative)	19	TMDS Data 0/ XUSB1 SHIELD	Shield for data pair 0 and USB1
5	SDL+	SDL lane (positive)	20	XUSB1-	USB lane 1 (negative)
6	DDC clock	DDC-based control signal (clock)	21	XUSB1+	USB lane 1 (positive)
7	DDC data	DDC-based control signal (data)	22	TMDS clock shield	Shield for clock pair
8	N/C	Not connected	23	TMDS clock+	DVI clock (positive)
9	TMDS data 1-	DVI lane 1 (negative)	24	TMDS clock -	DVI clock (negative)
10	TMDS DATA 1+	DVI lane 1 (negative) HDMI clock (positive)	C1	N/C	Not connected
11	TMDS DATA 1/ XUSB0 SHIELD	Shield for data pair 1 and USB0	C2	N/C	Not connected
12	XUSB0-	USB lane 0 (negative)	C3	N/C	Not connected
13	XUSB0+	USB lane 0 (positive)	C4	N/C	Not connected
14	+5 V power[1)]	+5 V power supply	C5	N/C	Not connected
15	Ground (return for +5 V, HSync and VSync)	Ground			

DVI, 24-pin, female

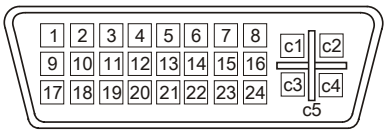

Table 149: DVI interface - Pinout

1) Protected internally by a multifuse.

3.10.2.3.4 Cable lengths and resolutions for SDL transmission

The following table lists the relationship between segment lengths and maximum resolution depending on the SDL cable being used:

SDL cable	Resolution						
Segment length [m]	VGA 640 x 480	SVGA 800 x 600	XGA 1024 x 768	HD 1366 x 768	SXGA 1280 x 1024	UXGA 1600 x 1200	FHD 1920 x 1080
0.8	5CASDL.0008-00	5CASDL.0008-00	5CASDL.0008-00	5CASDL.0008-00	5CASDL.0008-00	5CASDL.0008-00	5CASDL.0008-00
1.8	5CASDL.0018-00 5CASDL.0018-01 5CASDL.0018-03	5CASDL.0018-00 5CASDL.0018-01 5CASDL.0018-03	5CASDL.0018-00 5CASDL.0018-01 5CASDL.0018-03	5CASDL.0018-00 5CASDL.0018-01 5CASDL.0018-03	5CASDL.0018-00 5CASDL.0018-01 5CASDL.0018-03	5CASDL.0018-00 5CASDL.0018-01 5CASDL.0018-03	5CASDL.0018-00 5CASDL.0018-01 5CASDL.0018-03
5	5CASDL.0050-00 5CASDL.0050-01 5CASDL.0050-03	5CASDL.0050-00 5CASDL.0050-01 5CASDL.0050-03	5CASDL.0050-00 5CASDL.0050-01 5CASDL.0050-03	5CASDL.0050-00 5CASDL.0050-01 5CASDL.0050-03	5CASDL.0050-00 5CASDL.0050-01 5CASDL.0050-03	5CASDL.0050-00 5CASDL.0050-01 5CASDL.0050-03	5CASDL.0050-00 5CASDL.0050-01 5CASDL.0050-03
10	5CASDL.0100-00 5CASDL.0100-01 5CASDL.0100-03	5CASDL.0100-00 5CASDL.0100-01 5CASDL.0100-03	5CASDL.0100-00 5CASDL.0100-01 5CASDL.0100-03	5CASDL.0100-00 5CASDL.0100-01 5CASDL.0100-03	5CASDL.0100-00 5CASDL.0100-01 5CASDL.0100-03	5CASDL.0100-00 5CASDL.0100-01 5CASDL.0100-03	5CASDL.0100-00 5CASDL.0100-01 5CASDL.0100-03
15	5CASDL.0150-00 5CASDL.0150-01 5CASDL.0150-03	5CASDL.0150-00 5CASDL.0150-01 5CASDL.0150-03	5CASDL.0150-00 5CASDL.0150-01 5CASDL.0150-03	5CASDL.0150-00 5CASDL.0150-01 5CASDL.0150-03	5CASDL.0150-00 5CASDL.0150-01 5CASDL.0150-03	- - -	- - 5CASDL.0150-03
20	5CASDL.0200-00 5CASDL.0200-03	5CASDL.0200-00 5CASDL.0200-03	5CASDL.0200-00 5CASDL.0200-03	5CASDL.0200-00 5CASDL.0200-03	5CASDL.0200-00 5CASDL.0200-03	- -	- 5CASDL.0200-03
25	5CASDL.0250-00 5CASDL.0250-03	5CASDL.0250-00 5CASDL.0250-03	5CASDL.0250-00 5CASDL.0250-03	5CASDL.0250-00 5CASDL.0250-03	- -	- -	- -
30	5CASDL.0300-00 5CASDL.0300-03	5CASDL.0300-00 5CASDL.0300-03	- 5CASDL.0300-13	- 5CASDL.0300-13	- 5CASDL.0300-13	- -	- 5CASDL.0300-13
40	5CASDL.0400-13	5CASDL.0400-13	5CASDL.0400-13	5CASDL.0400-13	5CASDL.0400-13	-	5CASDL.0400-13

Table 150: Cable lengths and resolutions for SDL transmission

The following table lists the relationship between segment lengths and maximum resolution depending on the SDL cable being used:

SDL cable	Resolution						
Segment length [m]	VGA 640 x 480	SVGA 800 x 600	XGA 1024 x 768	HD 1366 x 768	SXGA 1280 x 1024	UXGA 1600 x 1200	FHD 1920 x 1080
0.8	5CASDL.0008-00	5CASDL.0008-00	5CASDL.0008-00	5CASDL.0008-00	5CASDL.0008-00	5CASDL.0008-00	5CASDL.0008-00
1.8	5CASDL.0018-00 5CASDL.0018-01 5CASDL.0018-03	5CASDL.0018-00 5CASDL.0018-01 5CASDL.0018-03	5CASDL.0018-00 5CASDL.0018-01 5CASDL.0018-03	5CASDL.0018-00 5CASDL.0018-01 5CASDL.0018-03	5CASDL.0018-00 5CASDL.0018-01 5CASDL.0018-03	5CASDL.0018-00 5CASDL.0018-01 5CASDL.0018-03	5CASDL.0018-00 5CASDL.0018-01 5CASDL.0018-03
5	5CASDL.0050-00 5CASDL.0050-01 5CASDL.0050-03	5CASDL.0050-00 5CASDL.0050-01 5CASDL.0050-03	5CASDL.0050-00 5CASDL.0050-01 5CASDL.0050-03	5CASDL.0050-00 5CASDL.0050-01 5CASDL.0050-03	5CASDL.0050-00 5CASDL.0050-01 5CASDL.0050-03	5CASDL.0050-00 5CASDL.0050-01 5CASDL.0050-03	5CASDL.0050-00 5CASDL.0050-01 5CASDL.0050-03
10	5CASDL.0100-00 5CASDL.0100-01 5CASDL.0100-03	5CASDL.0100-00 5CASDL.0100-01 5CASDL.0100-03	5CASDL.0100-00 5CASDL.0100-01 5CASDL.0100-03	5CASDL.0100-00 5CASDL.0100-01 5CASDL.0100-03	5CASDL.0100-00 5CASDL.0100-01 5CASDL.0100-03	5CASDL.0100-00 5CASDL.0100-01 5CASDL.0100-03	5CASDL.0100-00 5CASDL.0100-01 5CASDL.0100-03
15	5CASDL.0150-00 5CASDL.0150-01 5CASDL.0150-03	5CASDL.0150-00 5CASDL.0150-01 5CASDL.0150-03	5CASDL.0150-00 5CASDL.0150-01 5CASDL.0150-03	5CASDL.0150-00 5CASDL.0150-01 5CASDL.0150-03	5CASDL.0150-00 5CASDL.0150-01 5CASDL.0150-03	- - -	- - 5CASDL.0150-03
20	5CASDL.0200-00 5CASDL.0200-03	5CASDL.0200-00 5CASDL.0200-03	5CASDL.0200-00 5CASDL.0200-03	5CASDL.0200-00 5CASDL.0200-03	5CASDL.0200-00 5CASDL.0200-03	- -	- 5CASDL.0200-03
25	5CASDL.0250-00 5CASDL.0250-03	5CASDL.0250-00 5CASDL.0250-03	5CASDL.0250-00 5CASDL.0250-03	5CASDL.0250-00 5CASDL.0250-03	- -	- -	- -
30	5CASDL.0300-00 5CASDL.0300-03	5CASDL.0300-00 5CASDL.0300-03	- -	- -	- -	- -	- -

Table 151: Cable lengths and resolutions for SDL transmission

5CASDL.0xxx-01 SDL cables are routed through the swing arm shaft with the straight connector; the 45° connector is used on the industrial PC side.

3.10.2.3.5 Cable lengths and resolutions for DVI transmission

The following table lists the relationship between segment lengths and maximum resolution depending on the DVI cable being used:

DVI cable	Resolution						
Segment length [m]	VGA 640 x 480	SVGA 800 x 600	XGA 1024 x 768	HD 1366 x 768	SXGA 1280 x 1024	UXGA 1600 x 1200	FHD 1920 x 1080
1.8	5CADVI.0018-00	5CADVI.0018-00	5CADVI.0018-00	5CADVI.0018-00	5CADVI.0018-00	5CADVI.0018-00	5CADVI.0018-00
5	5CADVI.0050-00	5CADVI.0050-00	5CADVI.0050-00	5CADVI.0050-00	5CADVI.0050-00	5CADVI.0050-00	5CADVI.0050-00

Table 152: Cable lengths and resolutions for DVI transmission

The maximum cable length for DVI transfer is limited to 5 m due to the USB specification.

3.10.3 5AC901.LSD3-00

3.10.3.1 General information

The 5AC901.LSD3-00 monitor/panel option is equipped with an SDL3 interface.

- SDL3 interface
- Installation compatible with APC910

3.10.3.1.1 SDL3 mode

Smart Display Link 3 (SDL3) technology is used to transfer data from all communication channels between a B&R Industrial PC and a panel up to 100 m over a standard Ethernet cable. A male RJ45 connector designed for tight spaces such as feed-throughs and swing arm systems is used to connect to the device.

SDL3 mode with SDL3 transmitter

SDL3 mode with an SDL3 transmitter in the B&R Industrial PC allows all communication between the Automation Panel and the PC to be handled using a single SDL3 cable.

It is used to transfer not just display data, but touch screen, matrix key, LED, service and diagnostic data as well. The Automation Panel can be installed up to 100 m from the B&R Industrial PC. USB 2.0 is fully integrated in SDL3 and also transferred over this distance without the need for external modules.

The display's brightness can be configured using the ADI Control Center.

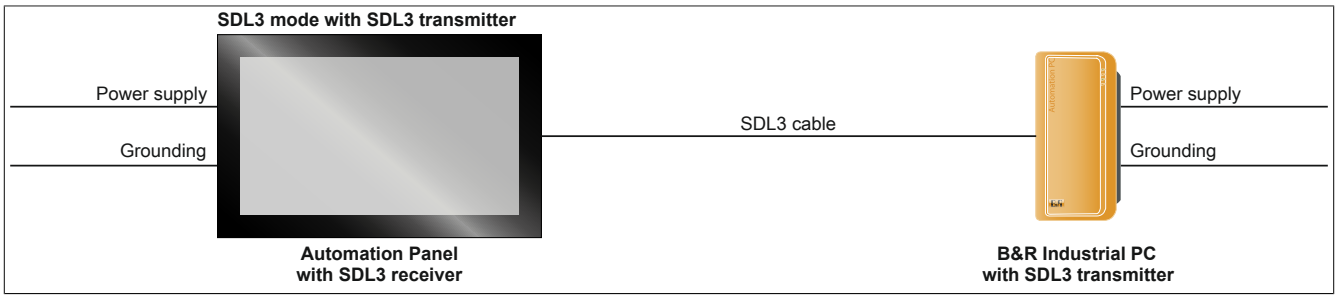

Availability of interfaces on the Automation Panel with SDL3 receiver:

SDL3 interface	✓	USB1, USB2	✓ USB 2.0	Power supply	✓	Grounding	✓

Maximum cable length of SDL3: 100 m

Prerequisites and requirements

- Automation Panel with SDL3 receiver
- B&R Industrial PC with SDL3 interface
- SDL3 cable

3.10.3.2 Order data

Model number	Short description	Figure
	Monitor/Panel options	
5AC901.LSD3-00	SDL3 transmitter	

Table 153: 5AC901.LSD3-00 - Order data

3.10.3.3 Technical data

Information:

The following characteristics, features and limit values only apply to this accessory and can deviate from those specified for the complete system. The data specifications for the complete system take precedence over those of individual components.

Model number	5AC901.LSD3-00
General information	
LED status indicators	Status, Link
B&R ID code	0xE400
Certification	
CE	Yes
UL	cULus E115267 Industrial Control Equipment
Interfaces	
SDL3 Out	
Design	Shielded RJ45
Type	SDL3
Electrical characteristics	
Power consumption	5 W
Environmental conditions	
Temperature	
Operation	0 to 55°C [1]
Storage	-20 to 60°C
Transport	-20 to 60°C
Relative humidity	
Operation	5 to 90%, non-condensing
Storage	5 to 95%, non-condensing
Transport	5 to 95%, non-condensing
Mechanical characteristics	
Weight	Approx. 47 g

Table 154: 5AC901.LSD3-00 - Technical data

1) Detailed information can be found in the temperature tables in the user's manual.

3.10.3.3.1 SDL3 interface

The SDL3 interface is a female RJ45 connector and operated with SDL3 transmission technology.

SDL3 interface		
The following overview lists the video signals available on the SDL3 output.		Female RJ45 connector 1 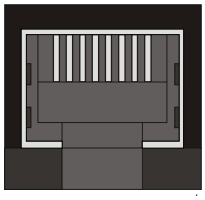
Monitor/Panel option	**Video signals**	
5AC901.LSD3-00	SDL3	

Table 155: SDL3 interface

Information:

The hardware and graphics drivers of approved operating systems support the hot plugging of display devices to the SDL3 interface for service purposes. The female RJ45 connector is specified for 500 connection cycles.

Information:

If a display device with touch screen is connected to the SDL3 interface and then disconnected again during operation (hot plugging), it may be necessary to recalibrate the touch screen.

3.10.3.3.2 Cable lengths and resolutions for SDL3 transmission

The following table lists the relationship between segment lengths and maximum resolution depending on the SDL3 cable being used:

SDL3 cable	Resolution						
Segment length [m]	VGA 640 x 480	SVGA 800 x 600	XGA 1024 x 768	HD 1366 x 768	SXGA 1280 x 1024	UXGA 1600 x 1200	FHD 1920 x 1080
3	5CASD3.0030-00	5CASD3.0030-00	5CASD3.0030-00	5CASD3.0030-00	5CASD3.0030-00	5CASD3.0030-00	5CASD3.0030-00
5	5CASD3.0050-00	5CASD3.0050-00	5CASD3.0050-00	5CASD3.0050-00	5CASD3.0050-00	5CASD3.0050-00	5CASD3.0050-00
10	5CASD3.0100-00	5CASD3.0100-00	5CASD3.0100-00	5CASD3.0100-00	5CASD3.0100-00	5CASD3.0100-00	5CASD3.0100-00
15	5CASD3.0150-00	5CASD3.0150-00	5CASD3.0150-00	5CASD3.0150-00	5CASD3.0150-00	5CASD3.0150-00	5CASD3.0150-00

Table 156: Cable lengths and resolutions for SDL3 transmission

SDL3 cable Segment length [m]	Resolution						
	VGA 640 x 480	SVGA 800 x 600	XGA 1024 x 768	HD 1366 x 768	SXGA 1280 x 1024	UXGA 1600 x 1200	FHD 1920 x 1080
20	5CASD3.0200-00	5CASD3.0200-00	5CASD3.0200-00	5CASD3.0200-00	5CASD3.0200-00	5CASD3.0200-00	5CASD3.0200-00
30	5CASD3.0300-00	5CASD3.0300-00	5CASD3.0300-00	5CASD3.0300-00	5CASD3.0300-00	5CASD3.0300-00	5CASD3.0300-00
50	5CASD3.0500-00	5CASD3.0500-00	5CASD3.0500-00	5CASD3.0500-00	5CASD3.0500-00	5CASD3.0500-00	5CASD3.0500-00
100	5CASD3.1000-00	5CASD3.1000-00	5CASD3.1000-00	5CASD3.1000-00	5CASD3.1000-00	5CASD3.1000-00	5CASD3.1000-00

Table 156: Cable lengths and resolutions for SDL3 transmission

3.10.3.3.3 SDL3 - LED status indicators

The LEDs are located next to the SDL3 interface.

SDL3 - LED status indicators			
LED	Color	Status	Function
Link	Yellow	On	Indicates an active SDL3 connection
		Off	No active SDL3 connection
Status	Yellow	On	SDL3 connection established and OK
		Blinking	No active SDL3 connection

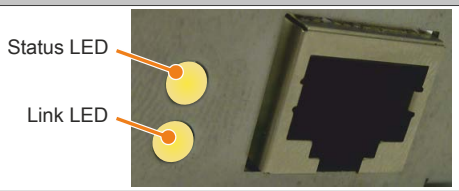

Table 157: SDL3 - LED status indicators

3.11 Uninterruptible power supply (UPS)

With an optionally integrated UPS, the B&R Industrial PC makes sure that the PC system completes write operations even when a power failure occurs. If the UPS detects a power failure, it switches to battery operation immediately without interruption. Any running programs will be properly terminated by the UPS. This eliminates the chance of inconsistent data (only works if the UPS has already been configured and the drive is enabled).

Information:

- **An external panel is not buffered by the UPS and will shut off when the power fails.**
- **More detailed information about uninterruptible power supplies can be found in the user's manual for the external UPS. This can be downloaded from the B&R website.**

Because the charging circuit is integrated in the housing of the B&R Industrial PC, installation has been simplified to merely attaching the connection cable to the battery unit mounted next to the PC.

Special emphasis was placed on ease of maintenance when the battery unit was designed. Batteries are easily accessible from the front and can be replaced in just a few moments when servicing.

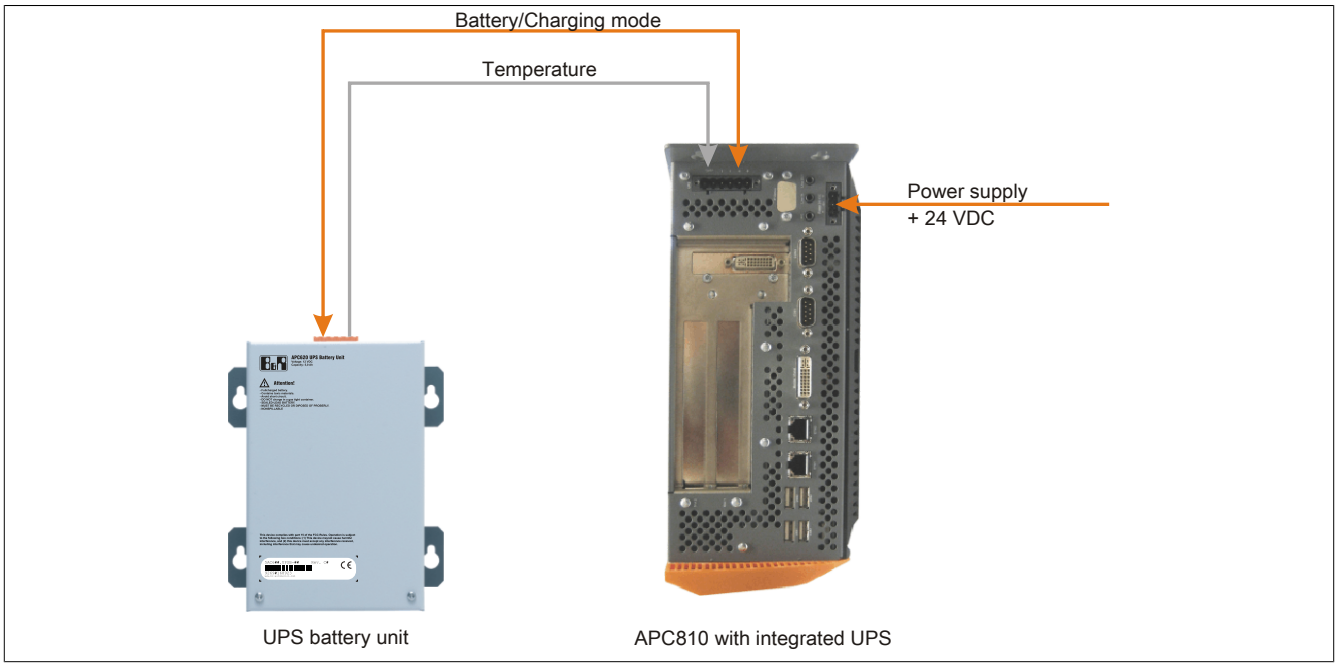

Figure 67: UPS principle

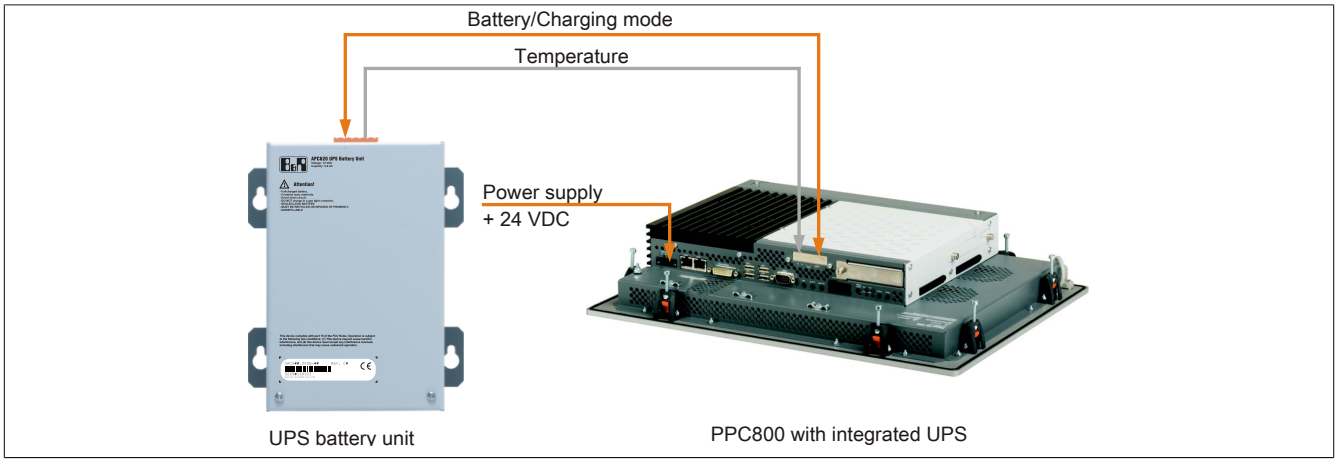

Figure 68: UPS principle

3.11.1 Requirements

- A suitable system unit
- 5AC901.IUPS-00 or 5AC901.IUPS-01UPS IF option
- Battery unit 5AC901.BUPS-00 or 5AC901.BUPS-01

- UPS connection cable 0.5 meters (5CAUPS.0005-01), 1 meter (5CAUPS.0010-01) or 3 meters (5CAUPS.0030-01)
- B&R UPS configured in the ADI Control Center

Warning!

The 5AC901.BUPS-00 battery unit is only permitted to be operated with the 5AC901.IUPS-00 UPS IF option!

The 5AC901.BUPS-01 battery unit is only permitted to be operated with the 5AC901.IUPS-01 UPS IF option!

Information:

For information about installation and connecting to the UPS IF option, see "Installing and connecting the UPS battery unit" on page 394.

3.11.2 5AC901.IUPS-00

3.11.2.1 General information

The 5AC901.IUPS-00 UPS IF option, together with the 5AC901.BUPS-00 battery unit, allows the B&R Industrial PC to be shut down without any loss of data during a power failure.

The 5AC901.IUPS-00 UPS interface option can only be operated in the IF option 1 slot.

Warning!

The 5AC901.IUPS-00 UPS IF option is only permitted to be operated with the 5AC901.BUPS-00 battery unit!

Information:

If the system is in standby mode (S5: Soft-off mode or S4: Hibernation mode - suspend-to-disk), then the internal UPS interface option charges the connected battery unit. The system's internal power supplies are active during this procedure. This allows various actions to be completed (e.g. opening the tray of the slide-in DVD drive).

3.11.2.2 Order data

Model number	Short description	Figure
	Uninterruptible power supplies	
5AC901.IUPS-00	UPS - For 4.5 Ah battery	
	Required accessories	
	Uninterruptible power supplies	
5AC901.BUPS-00	Battery unit 4.5 Ah - For UPS 5AC901.IUPS-00	
5CAUPS.0005-01	UPS cable - 0.5 m - For 5AC901.IUPS-xx	
5CAUPS.0010-01	UPS cable - 1 m - For 5AC901.IUPS-xx	
5CAUPS.0030-01	UPS cable - 3 m - For 5AC901.IUPS-xx	

Table 158: 5AC901.IUPS-00 - Order data

3.11.2.3 Technical data

Information:

The following characteristics, features and limit values only apply to this accessory and can deviate from those specified for the complete system. The data specifications for the complete system take precedence over those of individual components.

Model number	5AC901.IUPS-00
General information	
B&R ID code	0xD851
Certification	
CE	Yes
UL	cULus E115267 Industrial Control Equipment
HazLoc	cULus HazLoc E180196 Industrial Control Equipment for Hazardous Locations Class I, Division 2, Groups ABCD, T3C[1)]
GOST-R	Yes
Electrical characteristics	
Power consumption	Max. 30 W at 1 A
Deep discharge protection	Yes
Short circuit protection	Yes [2)]
Battery charging data	
Charging current	Typ. 1 A
Environmental conditions	
Temperature	
Operation	0 to 55°C [3)]
Storage	-20 to 60°C
Transport	-20 to 60°C

Table 159: 5AC901.IUPS-00 - Technical data

Model number	5AC901.IUPS-00
Relative humidity	
Operation	5 to 90%, non-condensing
Storage	5 to 95%, non-condensing
Transport	5 to 95%, non-condensing
Mechanical characteristics	
Weight	Approx. 28 g

Table 159: 5AC901.IUPS-00 - Technical data

1) Yes, although applies only if all components installed within the complete system have this certification and the complete system itself carries the corresponding mark.
2) The interface option provides protection against short circuits. This does not apply to the connected battery unit.
3) Detailed information can be found in the temperature tables in the user's manual.

3.11.2.3.1 Pinout

UPS interface		
Pin	**Assignment**	4-pin male connector 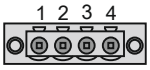
1	Temperature sensor	
2	Temperature sensor	
3	-	
4	+	

Table 160: 5AC901.IUPS-00 / -01 - Pinout

3.11.2.4 Installation

This module is installed using the materials included in delivery. For more information regarding installation, see "Installing interface options" on page 379.

This module is installed using the materials included in delivery. For more information regarding installation, see "Installing the interface option" on page .

3.11.3 5AC901.IUPS-01

3.11.3.1 General information

The 5AC901.IUPS-01 UPS IF option, together with the 5AC901.BUPS-01 battery unit, allows the B&R Industrial PC to be shut down without any loss of data during a power failure.

The 5AC901.IUPS-01 UPS interface option can only be operated in the IF option 1 slot.

Warning!

The 5AC901.IUPS-01 UPS IF option is only permitted to be operated with the 5AC901.BUPS-01 battery unit!

Information:

If the system is in standby mode (S5: Soft-off mode or S4: Hibernation mode - suspend-to-disk), then the internal UPS interface option charges the connected battery unit. The system's internal power supplies are active during this procedure. This allows various actions to be completed (e.g. opening the tray of the slide-in DVD drive).

3.11.3.2 Order data

Model number	Short description	Figure
	Uninterruptible power supplies	
5AC901.IUPS-01	UPS - For 2.2 Ah battery	
	Required accessories	
	Uninterruptible power supplies	
5AC901.BUPS-01	Battery unit 2.2 Ah - For UPS 5AC901.IUPS-01	
5CAUPS.0005-01	UPS cable - 0.5 m - For 5AC901.IUPS-xx	
5CAUPS.0010-01	UPS cable - 1 m - For 5AC901.IUPS-xx	
5CAUPS.0030-01	UPS cable - 3 m - For 5AC901.IUPS-xx	

Table 161: 5AC901.IUPS-01 - Order data

3.11.3.3 Technical data

Information:

The following characteristics, features and limit values only apply to this accessory and can deviate from those specified for the complete system. The data specifications for the complete system take precedence over those of individual components.

Model number	5AC901.IUPS-01
General information	
B&R ID code	0xDF84
Certification	
CE	Yes
UL	cULus E115267 Industrial Control Equipment
HazLoc	cULus HazLoc E180196 Industrial Control Equipment for Hazardous Locations Class I, Division 2, Groups ABCD, T3C[1)]
GOST-R	Yes
Electrical characteristics	
Power consumption	Max. 25 W at 0.9 A
Deep discharge protection	Yes
Short circuit protection	Yes [2)]
Battery charging data	
Charging current	Typ. 0.88 A
Environmental conditions	
Temperature	
Operation	0 to 55°C [3)]
Storage	-20 to 60°C
Transport	-20 to 60°C

Table 162: 5AC901.IUPS-01 - Technical data

Model number	5AC901.IUPS-01
Relative humidity	
Operation	5 to 90%, non-condensing
Storage	5 to 95%, non-condensing
Transport	5 to 95%, non-condensing
Mechanical characteristics	
Weight	Approx. 28 g

Table 162: 5AC901.IUPS-01 - Technical data

1) Yes, although applies only if all components installed within the complete system have this certification and the complete system itself carries the corresponding mark.
2) The interface option provides protection against short circuits. This does not apply to the connected battery unit.
3) Detailed information can be found in the temperature tables in the user's manual.

3.11.3.3.1 Pinout

UPS interface		
Pin	**Assignment**	4-pin male connector 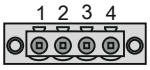
1	Temperature sensor	
2	Temperature sensor	
3	-	
4	+	

Table 163: 5AC901.IUPS-00 / -01 - Pinout

3.11.3.4 Installation

This module is installed using the materials included in delivery. For more information regarding installation, see "Installing interface options" on page 379.

This module is installed using the materials included in delivery. For more information regarding installation, see "Installing the interface option" on page .

3.11.4 5AC901.BUPS-00

3.11.4.1 General information

- Battery unit for the 5AC901.IUPS-00 UPS IF option
- Single-cell rechargeable battery
- 2 Hawker Cyclon 12 V 4.5 Ah rechargeable batteries connected in series
- Rated voltage: 24 V
- Capacity: 4.5 Ah

The battery unit has a limited service life and should be replaced regularly (after the specified service life at the latest).

> **Warning!**
>
> **The 5AC901.BUPS-00 battery unit is only permitted to be operated with the 5AC901.IUPS-00 UPS IF option!**

3.11.4.2 Order data

Model number	Short description	Figure
	Uninterruptible power supplies	
5AC901.BUPS-00	Battery unit 4.5 Ah - For UPS 5AC901.IUPS-00	
	Required accessories	
	Uninterruptible power supplies	
5CAUPS.0005-01	UPS cable - 0.5 m - For 5AC901.IUPS-xx	
5CAUPS.0010-01	UPS cable - 1 m - For 5AC901.IUPS-xx	
5CAUPS.0030-01	UPS cable - 3 m - For 5AC901.IUPS-xx	

Table 164: 5AC901.BUPS-00 - Order data

3.11.4.3 Technical data

Model number	5AC901.BUPS-00
General information	
Battery	
Type	Hawker Cyclon 12 V 4.5 Ah; two rechargeable batteries connected in series
Service life	Up to 15 years at 20°C / 10 years at 25°C [1]
Design	Single cell
Temperature sensor	NTC resistance
Maintenance interval during storage	6-month interval between charges
Certification	
CE	Yes
UL	cULus E115267 Industrial Control Equipment
HazLoc	cULus HazLoc E180196 Industrial Control Equipment for Hazardous Locations Class I, Division 2, Groups ABCD, T3C[2]
GOST-R	Yes
Charge duration when battery low	Typ. 7 hours
Electrical characteristics	
Nominal voltage	24 V
Capacity	4.5 Ah
Fuse	Yes
Battery charging data	
Charging current [3]	Typ. 1 A
Environmental conditions	
Temperature	
Operation	-30 to 60°C [4]
Storage	-65 to 80°C
Transport	-65 to 80°C
Relative humidity	
Operation	5 to 95%, non-condensing
Storage	5 to 95%, non-condensing
Transport	5 to 95%, non-condensing
Elevation	
Operation	Max. 3000 m

Table 165: 5AC901.BUPS-00 - Technical data

Model number	5AC901.BUPS-00
Mechanical characteristics	
Dimensions	
Width	223.2 mm
Height	78.2 mm
Depth	145 mm
Weight	Approx. 4600 g

Table 165: 5AC901.BUPS-00 - Technical data

1) Depends on the charging and discharging cycles (up to 80% battery capacity).
2) Yes, although applies only if all components installed within the complete system have this certification and the complete system itself carries the corresponding mark.
3) Maximum charging current.
4) Battery backing is no longer provided if the temperature falls below the minimum temperature or rises above the maximum temperature. Charging also no longer takes place since this could lead to battery damage.

3.11.4.4 Service life

The following diagram shows the relationship between ambient temperature and service life.

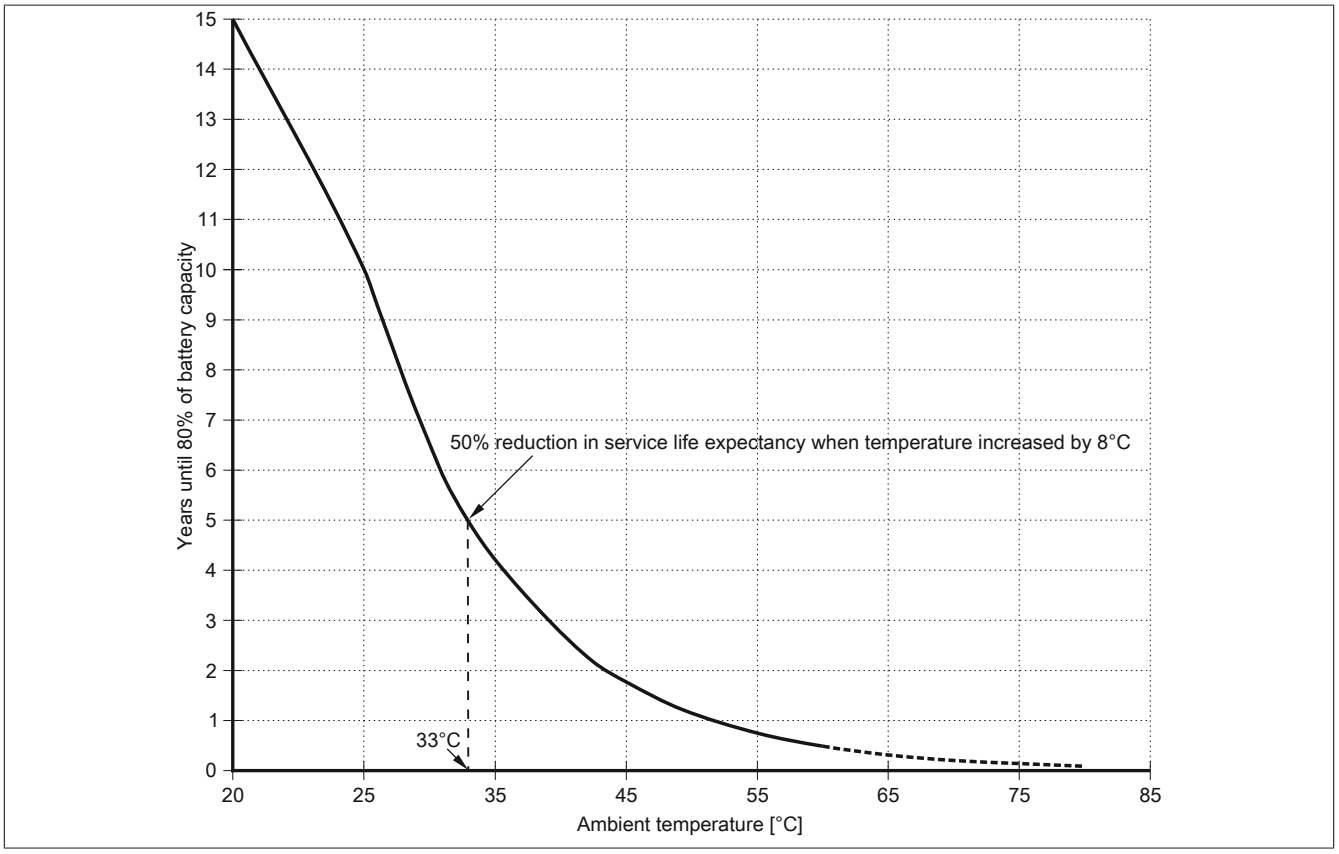

3.11.4.5 Dimensions

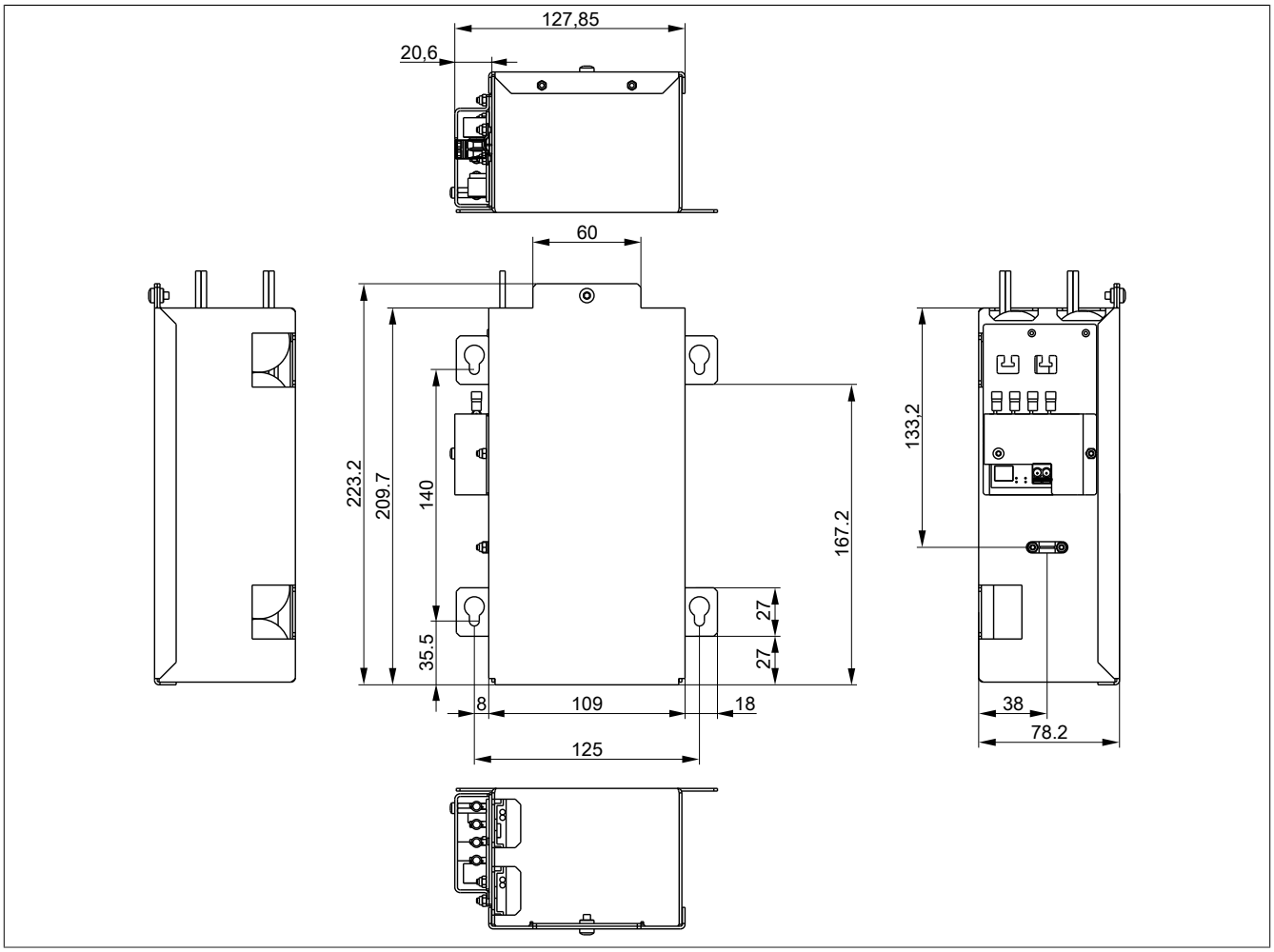

Figure 69: 5AC901.BUPS-00 - Dimensions

3.11.4.6 Drilling template

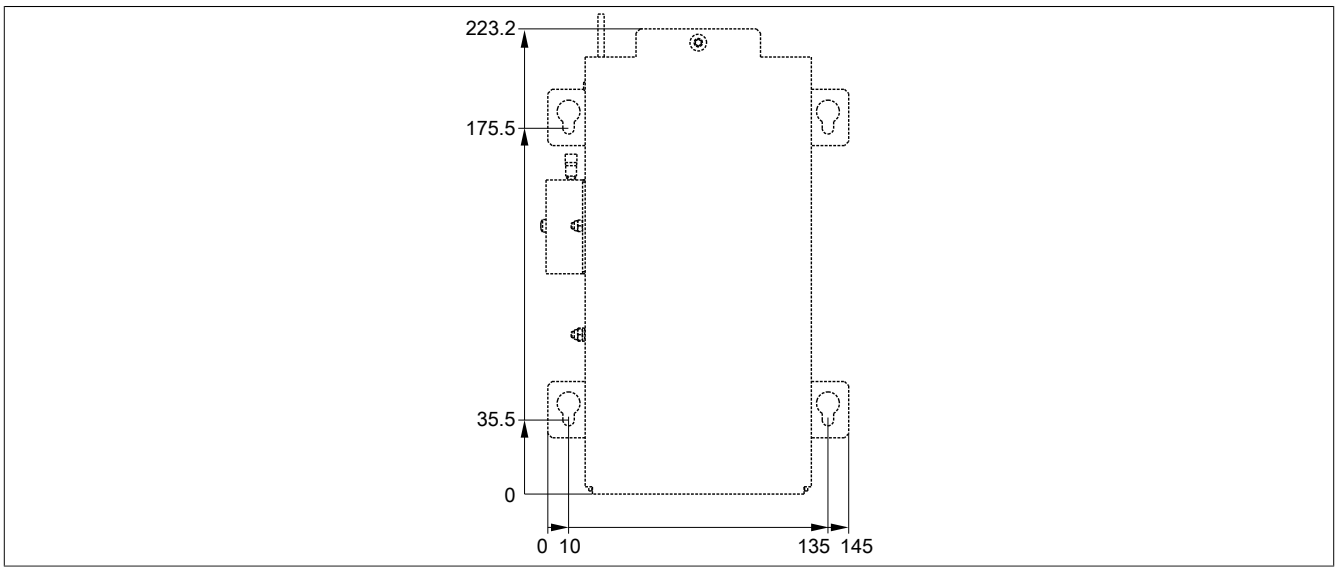

Figure 70: 5AC901.BUPS-00 - Drilling template

3.11.4.7 Installation

For information about installation and connecting to the UPS IF option, see "Installing and connecting the UPS battery unit" on page 394.

For information about installation and connecting to the UPS IF option, see "Installing and connecting the UPS battery unit" on page 394.

3.11.4.8 Precautions for handling and use

Spills and leaks:

Any further spillage or leakage must be prevented. Smaller spills must be bonded with dry sand, dirt and vermiculite. The use of flammable materials is prohibited. If possible, neutralize acids with sodium bicarbonate, chalk, etc. Acid-resistant clothing, shoes, gloves and face protection must be worn. The disposal of unneutralized acid in the sewage system is prohibited!

Waste disposal:

Used batteries must be disposed of in an environmentally friendly recycling process.

Neutralized mud must be stored in closed containers and stored/disposed of in accordance with applicable regulations. After neutralization and testing, larger spills diluted with water must be disposed of in accordance with applicable regulations.

Handling and storage:

- Batteries must be kept in cool, dry and well ventilated rooms with impermeable surfaces and appropriate containment conditions in case of leakage.
- Batteries must be protected from adverse weather conditions and separated from incompatible materials during storage and transport.
- A sufficient supply of water must be located nearby.
- Damage to containers where batteries are stored and transported must be prevented.
- Keep away from fire, sparks and excessive heat.

3.11.5 5AC901.BUPS-01

3.11.5.1 General information

- Battery unit for the 5AC901.IUPS-01 UPS IF option
- Maintenance-free lead acid battery
- 2 Panasonic 12 V 2.2 Ah rechargeable batteries connected in series
- Rated voltage: 24 V
- Capacity: 2.2 Ah

The battery unit has a limited service life and should be replaced regularly (after the specified service life at the latest).

> **Warning!**
>
> **The 5AC901.BUPS-01 battery unit is only permitted to be operated with the 5AC901.IUPS-01 UPS IF option!**

3.11.5.2 Order data

Model number	Short description	Figure
	Uninterruptible power supplies	
5AC901.BUPS-01	Battery unit 2.2 Ah - For UPS 5AC901.IUPS-01	
	Required accessories	
	Uninterruptible power supplies	
5CAUPS.0005-01	UPS cable - 0.5 m - For 5AC901.IUPS-xx	
5CAUPS.0010-01	UPS cable - 1 m - For 5AC901.IUPS-xx	
5CAUPS.0030-01	UPS cable - 3 m - For 5AC901.IUPS-xx	

Table 166: 5AC901.BUPS-01 - Order data

3.11.5.3 Technical data

Model number	5AC901.BUPS-01
General information	
Battery	
Type	Panasonic 12 V 2.2 Ah; two rechargeable batteries connected in series
Service life	Up to 5 years at 20°C [1]
Design	Maintenance-free lead acid battery
Temperature sensor	NTC resistance
Maintenance interval during storage	6-month interval between charges
Certification	
CE	Yes
UL	cULus E115267 Industrial Control Equipment
HazLoc	cULus HazLoc E180196 Industrial Control Equipment for Hazardous Locations Class I, Division 2, Groups ABCD, T3C[2]
GOST-R	Yes
Charge duration when battery low	Typ. 5 hours
Electrical characteristics	
Nominal voltage	24 V
Capacity	2.2 Ah
Fuse	Yes
Battery charging data	
Charging current [3]	Typ. 0.88 A
Environmental conditions	
Temperature	
Operation	0 to 40°C [4]
Storage	-15 to 40°C
Transport	-15 to 40°C
Relative humidity	
Operation	25 to 85%, non-condensing
Storage	25 to 85%, non-condensing
Transport	25 to 85%, non-condensing

Table 167: 5AC901.BUPS-01 - Technical data

Model number	5AC901.BUPS-01
Elevation	
Operation	Max. 3000 m
Mechanical characteristics	
Dimensions	
Width	188 mm
Height	78 mm
Depth	115 mm
Weight	Approx. 2550 g

Table 167: 5AC901.BUPS-01 - Technical data

1) Depends on the charging and discharging cycles.
2) Yes, although applies only if all components installed within the complete system have this certification and the complete system itself carries the corresponding mark.
3) Maximum charging current.
4) Battery backing is no longer provided if the temperature falls below the minimum temperature or rises above the maximum temperature. Charging also no longer takes place since this could lead to battery damage.

3.11.5.4 Service life

The following diagram shows the relationship between ambient temperature and service life.

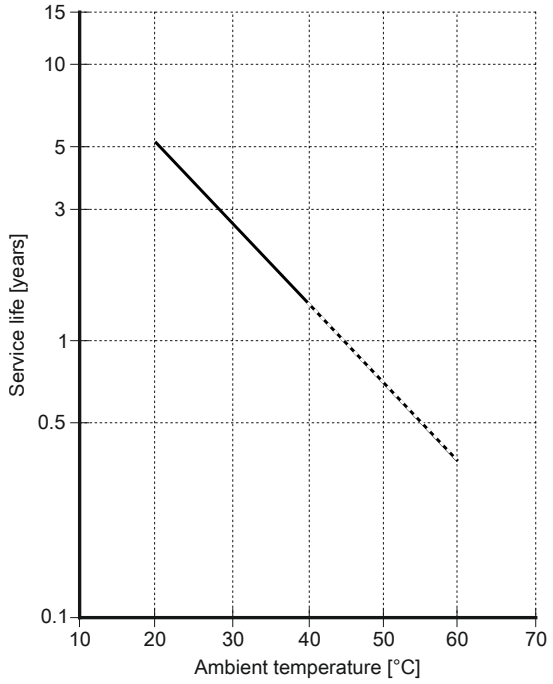

3.11.5.5 Dimensions

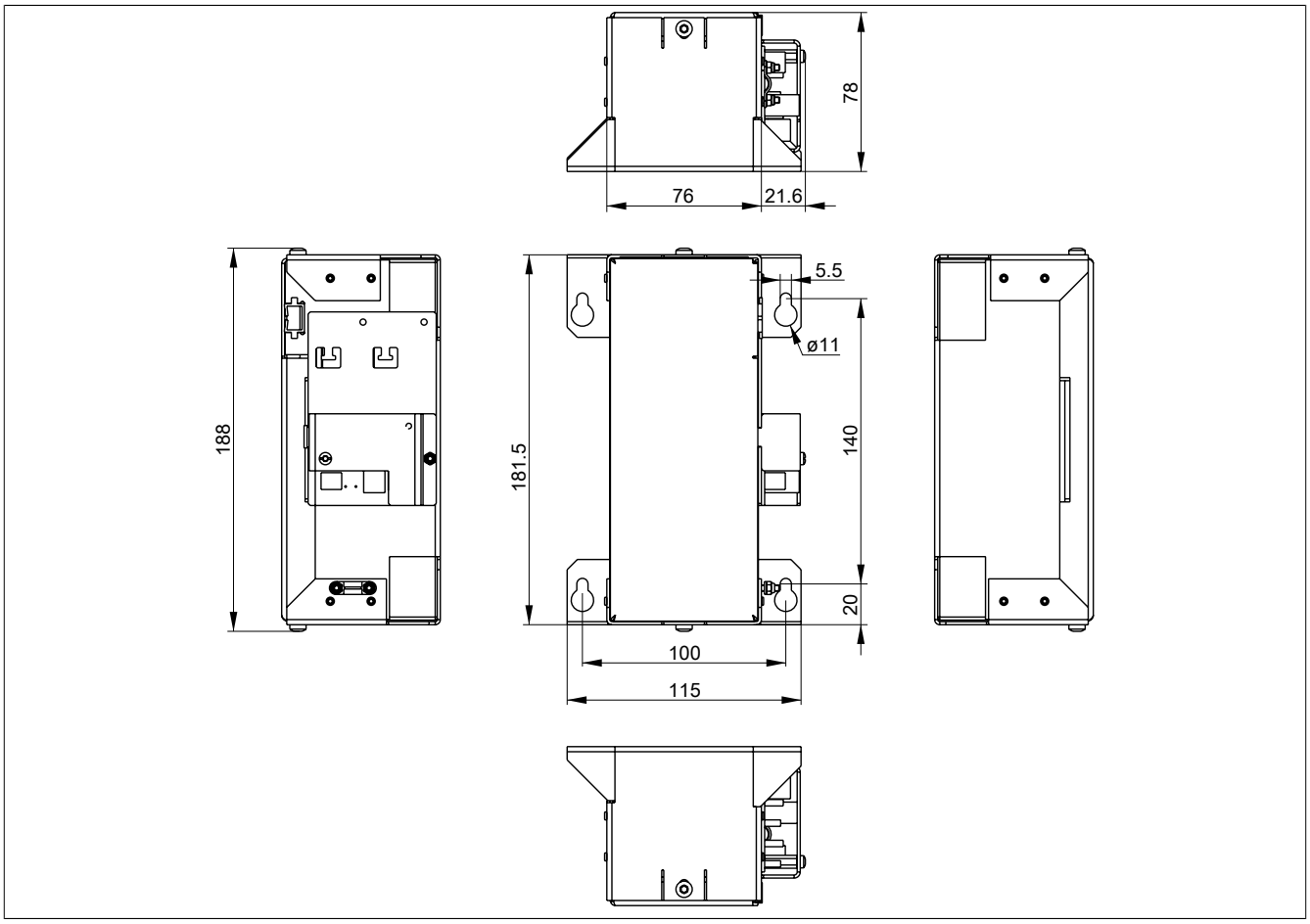

Figure 71: 5AC901.BUPS-01 - Dimensions

3.11.5.6 Drilling template

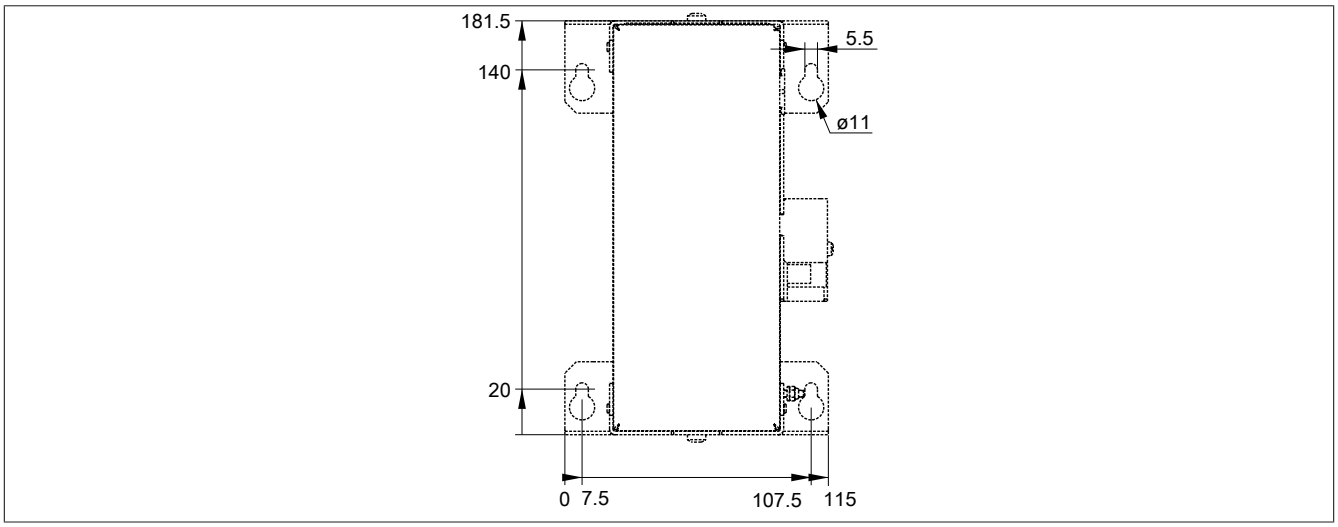

Figure 72: 5AC901.BUPS-01 - Drilling template

3.11.5.7 Installation

For information about installation and connecting to the UPS IF option, see "Installing and connecting the UPS battery unit" on page 394.

For information about installation and connecting to the UPS IF option, see "Installing and connecting the UPS battery unit" on page 394.

3.11.5.8 Precautions for handling and use

Spills and leaks:

Any further spillage or leakage must be prevented. Smaller spills must be bonded with dry sand, dirt and vermiculite. The use of flammable materials is prohibited. If possible, neutralize acids with sodium bicarbonate, chalk, etc. Acid-resistant clothing, shoes, gloves and face protection must be worn. The disposal of unneutralized acid in the sewage system is prohibited!

Waste disposal:

Used batteries must be disposed of in an environmentally friendly recycling process.

Neutralized mud must be stored in closed containers and stored/disposed of in accordance with applicable regulations. After neutralization and testing, larger spills diluted with water must be disposed of in accordance with applicable regulations.

Handling and storage:

- Batteries must be kept in cool, dry and well ventilated rooms with impermeable surfaces and appropriate containment conditions in case of leakage.
- Batteries must be protected from adverse weather conditions and separated from incompatible materials during storage and transport.
- A sufficient supply of water must be located nearby.
- Damage to containers where batteries are stored and transported must be prevented.
- Keep away from fire, sparks and excessive heat.

3.11.6 5CAUPS.xxxx-01

3.11.6.1 General information

The UPS connection cable establishes the connection between the UPS interface option and the battery unit.

3.11.6.2 Order data

Model number	Short description	Figure
	Uninterruptible power supplies	
5CAUPS.0005-01	UPS cable - 0.5 m - For 5AC901.IUPS-xx	
5CAUPS.0010-01	UPS cable - 1 m - For 5AC901.IUPS-xx	
5CAUPS.0030-01	UPS cable - 3 m - For 5AC901.IUPS-xx	

Table 168: 5CAUPS.0005-01, 5CAUPS.0010-01, 5CAUPS.0030-01 - Order data

3.11.6.3 Technical data

Model number	5CAUPS.0005-01	5CAUPS.0010-01	5CAUPS.0030-01
General information			
Certification			
CE		Yes	
UL		cULus E115267 Industrial Control Equipment	
HazLoc		cULus HazLoc E180196 Industrial Control Equipment for Hazardous Locations Class I, Division 2, Groups ABCD, T3C[1]	
GOST-R		Yes	
Cable construction			
Wire cross section		2x 0.5 mm² (AWG 20) 2x 2.5 mm² (AWG 13)	
Conductor resistance		At 0.5 mm² max. 39 Ω/km At 2.5 mm² max. 7.98 Ω/km [2]	
Outer sheathing			
Material		Thermoplastic PVC-based material	
Color		Window gray (similar to RAL 7040)	
Connector			
Type		Screw clamps, 4-pin [3]	
Electrical characteristics			
Operating voltage		Max. 30 VDC	
Peak operating voltage		Typ. 30 VDC	
Test voltage			
Wire/Wire		1500 V	
Current-carrying capacity		10 A at 20°C	
Environmental conditions			
Temperature			
Moving		-5 to 70°C	
Static		-30 to 70°C	
Mechanical characteristics			
Dimensions			
Length	0.5 m	1 m	3 m
Diameter		7 mm	
Bend radius			
Moving		10x wire diameter	
Fixed installation		5x wire diameter	
Weight	Approx. 55 g	Approx. 100 g	Approx. 250 g

Table 169: 5CAUPS.0005-01, 5CAUPS.0010-01, 5CAUPS.0030-01 - Technical data

1) Yes, although applies only if all components installed within the complete system have this certification and the complete system itself carries the corresponding mark.
2) At an ambient temperature of 20°C.
3) Tightening torque: min. 0.4 Nm, max. 0.5 Nm.

Information:

The maximum length of the UPS connection cable depends on the following:

- **Power**
- **Voltage drop**
- **Wire cross section**
- **Sensor lines**

3.11.6.4 Installation

For information about connecting the cable to the battery unit, please see section "Installing and connecting the UPS battery unit" on page 394.

For information about connecting the cable to the battery unit, please see section "Installing and connecting the UPS battery unit" on page 394.

3.12 Front covers

3.12.1 5AC901.FF0x-00

3.12.1.1 General information

The front cover on the APC910 keeps the front-side interfaces free of dust, dirt and other contaminants.

4 different front cover variants are available for the APC910 system units.

> **Information:**
>
> **The front cover is not included with the system unit and must be ordered separately.**

3.12.1.2 Order data

Model number	Short description	Figure
	Front cover	
5AC901.FF01-00	Front cover for 1-slot APC910 - Orange	
5AC901.FF01-01	Front cover for 1-slot APC910 - Dark gray	
5AC901.FF01-02	Front cover for 1-slot APC910 - Dark gray - Without logo	
5AC901.FF01-03	Front cover for 1-slot APC910 - Orange - Without logo	
5AC901.FF02-00	Front cover for 2-slot APC910 - Orange	
5AC901.FF02-01	Front cover for 2-slot APC910 - Dark gray	
5AC901.FF02-02	Front cover for 2-slot APC910 - Dark gray - Without logo	
5AC901.FF02-03	Front cover for 2-slot APC910 - Orange - Without logo	
5AC901.FF05-00	Front cover for 5-slot APC910 - Orange	
5AC901.FF05-01	Front cover for 5-slot APC910 - Dark gray	
5AC901.FF05-02	Front cover for 5-slot APC910 - Dark gray - Without logo	
5AC901.FF05-03	Front cover for 5-slot APC910 - Orange - Without logo	

Table 170: 5AC901.FF01-00, 5AC901.FF01-01, 5AC901.FF01-02, 5AC901.FF01-03, 5AC901.FF02-00, 5AC901.FF02-01, 5AC901.FF02-02, 5AC901.FF02-03, 5AC901.FF05-00, 5AC901.FF05-01, 5AC901.FF05-02, 5AC901.FF05-03 - Order data

3.12.1.3 Technical data

Model number	5AC901. FF01-00	5AC901. FF01-01	5AC901. FF01-02	5AC901. FF01-03	5AC901. FF02-00	5AC901. FF02-01	5AC901. FF02-02	5AC901. FF02-03
General information								
Certification								
CE	Yes							
UL	cULus E115267 Industrial Control Equipment							
DNV GL	Temperature: **B** (0 - 55°C) Humidity: **B** (up to 100%) Vibration: **A** (0.7g) EMC: **B** (Bridge and open deck)[1]			-	Temperature: **B** (0 - 55°C) Humidity: **B** (up to 100%) Vibration: **A** (0.7g) EMC: **B** (Bridge and open deck)[1]			-
GOST-R	Yes			-	Yes		-	
Mechanical characteristics								
Housing								
Front cover	Orange plastic (similar to Pantone 144CV)	Dark gray plastic (similar to Pantone 432C)			Orange plastic (similar to Pantone 144CV)	Dark gray plastic (similar to Pantone 432C)		
Material	Plastic							
Dimensions								
Width	82 mm				120.9 mm			
Height	264 mm							
Depth	14 mm							
Weight	Approx. 84 g				Approx. 117 g			

Table 171: 5AC901.FF01-00, 5AC901.FF01-01, 5AC901.FF01-02, 5AC901.FF01-03, 5AC901.FF02-00, 5AC901.FF02-01, 5AC901.FF02-02, 5AC901.FF02-03 - Technical data

1) Yes, although applies only if all components installed within the complete system have this certification.

Model number	5AC901.FF05-00	5AC901.FF05-01	5AC901.FF05-02	5AC901.FF05-03
General information				
Certification				
CE	Yes			
UL	cULus E115267 Industrial Control Equipment			
GOST-R	Yes	Yes	-	-
Mechanical characteristics				
Housing				
Front cover	Orange plastic (similar to Pantone 144CV)	Dark gray plastic (similar to Pantone 432C)	Dark gray plastic (similar to Pantone 432C)	Dark gray plastic (similar to Pantone 432C)
Material	Plastic			
Dimensions				
Width	202 mm			
Height	264 mm			
Depth	14 mm			
Weight	Approx. 197 g			

Table 172: 5AC901.FF05-00, 5AC901.FF05-01, 5AC901.FF05-02, 5AC901.FF05-03 - Technical data

Chapter 3 • Installation

1 Installation

Danger!

- **All supplied power must be disconnected before removing device covers or components or installing/removing accessories, hardware or cables.**
- **The power cable must be disconnected from the device and from the voltage supply.**
- **All covers, components, accessories, hardware and cables must be installed or connected before the device can be connected to the power supply and turned on.**

Devices are installed using the mounting clip found on the housing. These clips are designed for M5 screws.

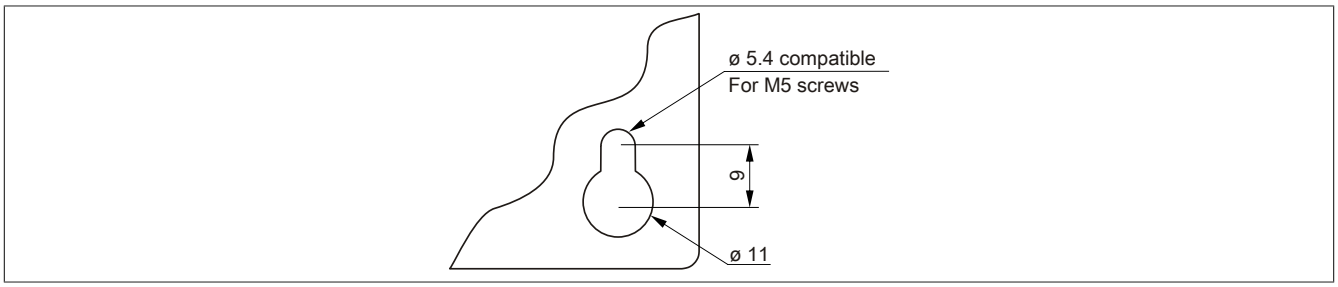

Figure 73: Mounting plates

The exact position of the mounting holes is illustrated in the drilling templates in 2 "Technical data", section "Individual components" on page 68.

1.1 Important installation information

- Environmental conditions must be taken into consideration.
- When installed in an enclosure, enough space must be available for air to circulate sufficiently.
- This device must be installed on a flat, clean and burr-free surface.
- This device is only certified for operation in enclosed rooms.
- This device must not be subjected to direct sunlight.
- Ventilation holes must not be covered.
- This device must be installed using one of the approved mounting orientations.
- The wall or control cabinet must be able to withstand four times the total weight of the device.
- The bend radius of connected cables (DVI, SDL, USB, etc.) must not be exceeded.

1.2 Procedure

1. Drill the necessary holes in the mounting surface. The exact position of the mounting holes is illustrated in the drilling templates.
2. Mount the B&R Industrial PC using M5 screws.

1.3 Mounting orientations

The following diagrams show the approved mounting orientations for the Automation PC 910. The APC910 must be mounted as described in the following sections.

1.3.1 Vertical mounting orientation

APC910 systems with or without a fan kit can be mounted in this orientation.

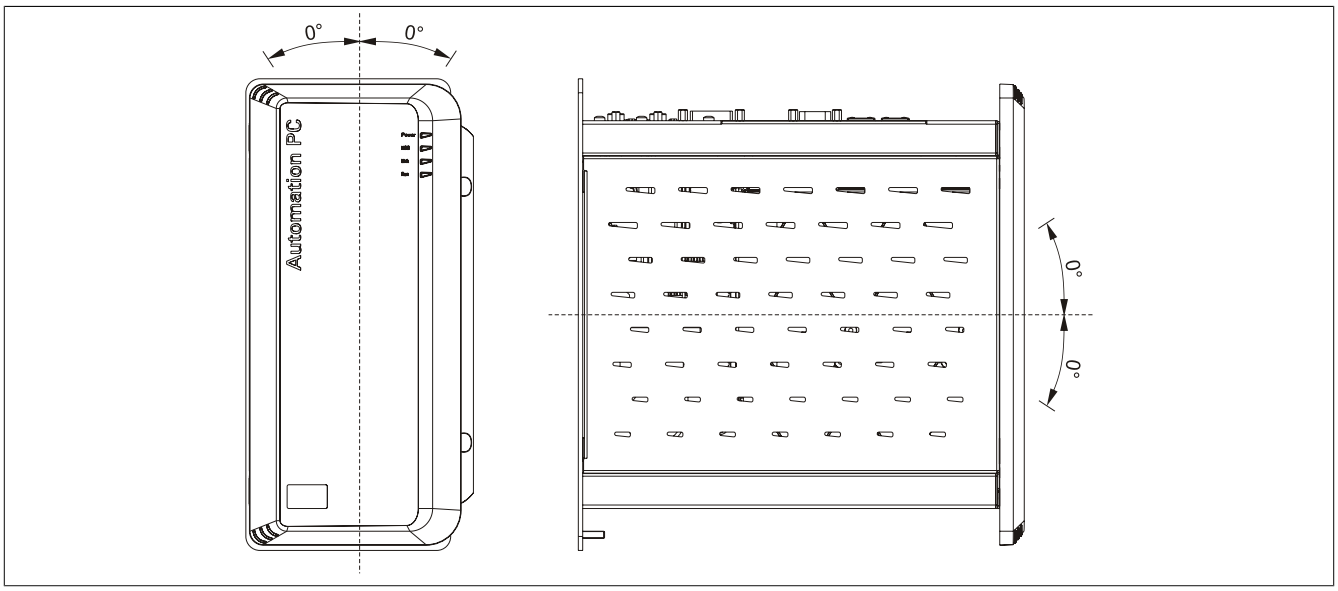

Figure 74: Vertical mounting orientation

In order to facilitate natural air circulation, devices must be mounted according to the spacing indicated in the section "Spacing for air circulation" on page 195.

1.3.2 Horizontal mounting orientation

Operation in the horizontal mounting orientation (heat sink on top) requires the use of a fan kit. The maximum ambient temperature specification must be reduced by 5°C.

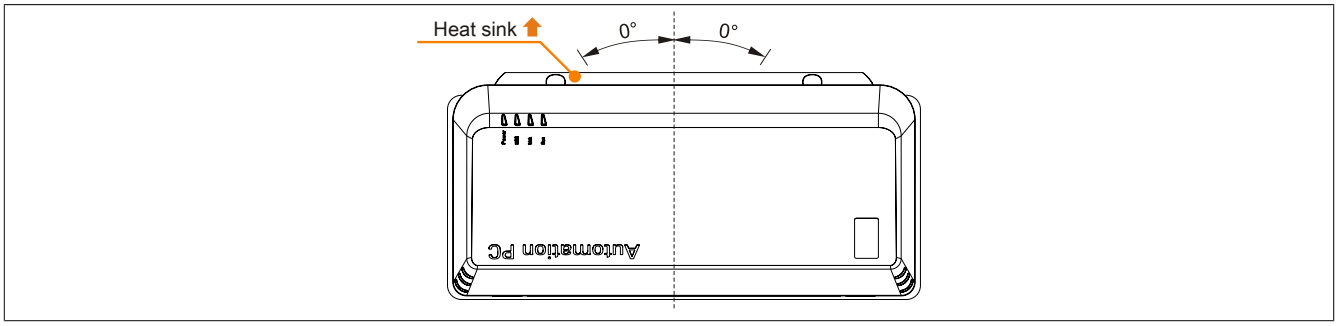

Figure 75: Horizontal mounting orientation

In order to facilitate natural air circulation, devices must be mounted according to the spacing indicated in the section "Spacing for air circulation" on page 195.

1.3.3 Mounting orientation - Floor-mounted

Floor-mounted operation (mounting plate mounted to the floor) requires the use of a fan kit. The maximum ambient temperature specification must be reduced by 5°C.

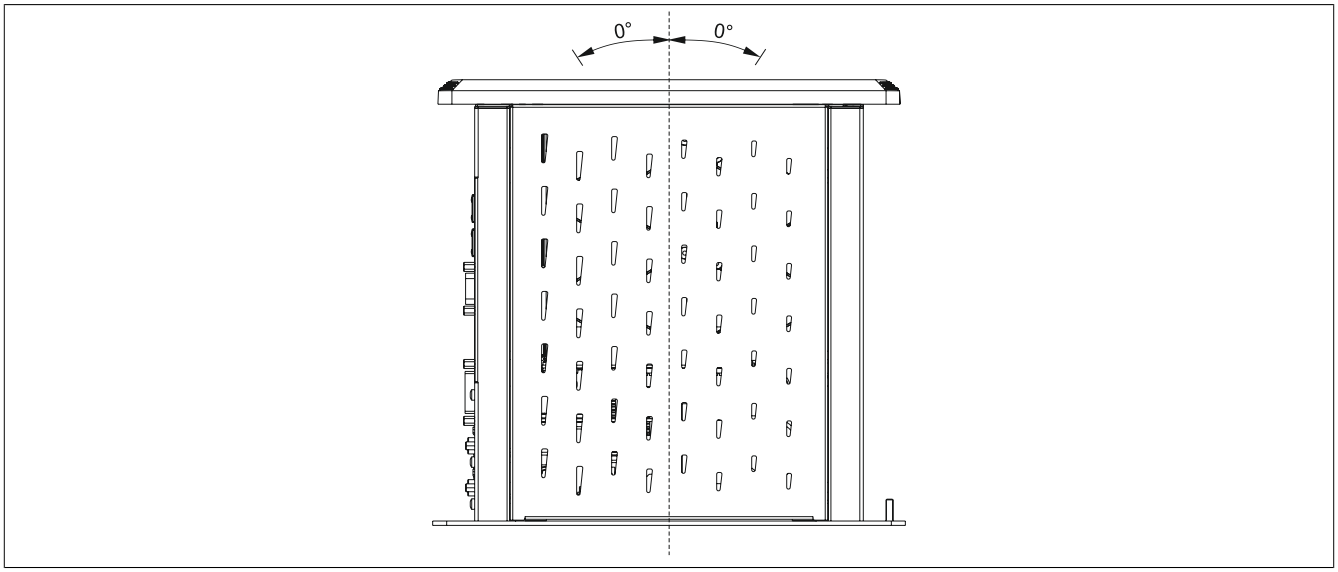

Figure 76: Mounting orientation - Floor-mounted

In order to facilitate natural air circulation, devices must be mounted according to the spacing indicated in the section "Spacing for air circulation" on page 195.

1.4 Spacing for air circulation

In order to guarantee sufficient air circulation, allow the specified amount of space above, below, to the side and behind the Automation PC 510Automation PC 511Automation PC 810Automation PC 910Power Panel 500Panel PC 800. The minimum specified spacing is indicated in the following diagram. This applies to all Automation PC 510Automation PC 511Automation PC 810Automation PC 910Power Panel 500Panel PC 800 variants.

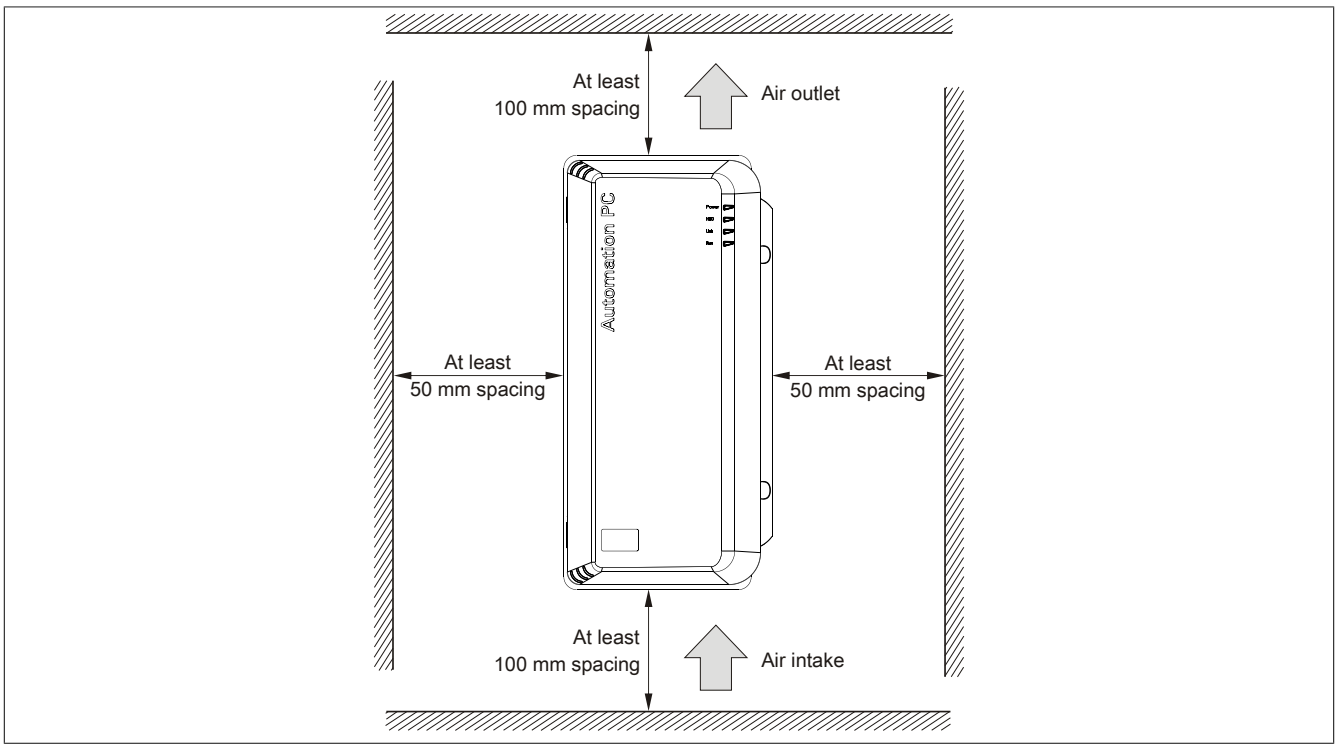

Figure 77: Standard mounting - Spacing

These defined distances are valid for both the vertical and horizontal mounting orientations for the APC910.

Information:

The spacing specifications for air circulation are based on the worst-case scenario for operation at the maximum specified ambient temperature (see "Temperature specifications" in the chapter "Technical data").

If the spacing specifications for air circulation cannot be adhered to, then the maximum specified temperatures for the temperature sensors (see "Temperature sensor positions" in the chapter "Technical data") must be monitored by the user and appropriate measures taken if they are exceeded.

2 Cable connections

Bend radius specifications must be taken into account when installing or connecting cables.

Information:

The maximum torque for the locating screws is 0.5 Nm.

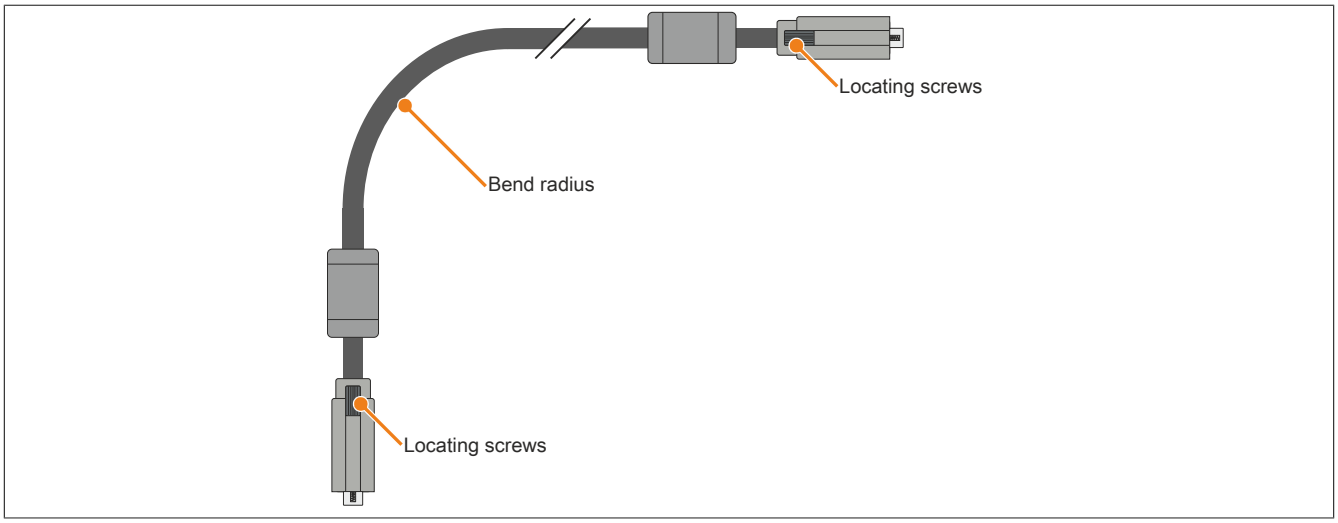

Figure 78: Bend radius - Cable connection

Information:

The specified bend radius is listed in the technical data for the respective cable.

Information:

B&R generally recommends connecting swing arm devices to the Automation PC via SDL3 instead of SDL. The CAT6/CAT7 cables used with SDL3 are much easier to route through swing arm systems and connect to the device.

3 Grounding concept

Functional ground is a current path of low impedance between electrical circuits and ground. It is used, for example, to improve immunity to disturbances and not necessarily as a protective measure. It therefore serves only to deflect disturbances, not to provide any kind of protection against electric shock.

This device comes equipped with 2 functional ground connections:

- Power supply
- Ground connection

To guarantee safe conductance of electric disturbances, the following points must be observed:

- The device must be connected to the central grounding point in the control cabinet using the shortest route possible.
- A cable with a minimum cross section of 2.5 mm² per connection should be used. If a cable with wire end sleeves is connected to the 0TB103.9 or 0TB103.91 terminal block, then a cable with maximum 1.5 mm² per connection is possible.
- Note the line shielding concept. All data cables connected to the device must be shielded.

Symbol indicating functional ground on the B&R device: ⏚

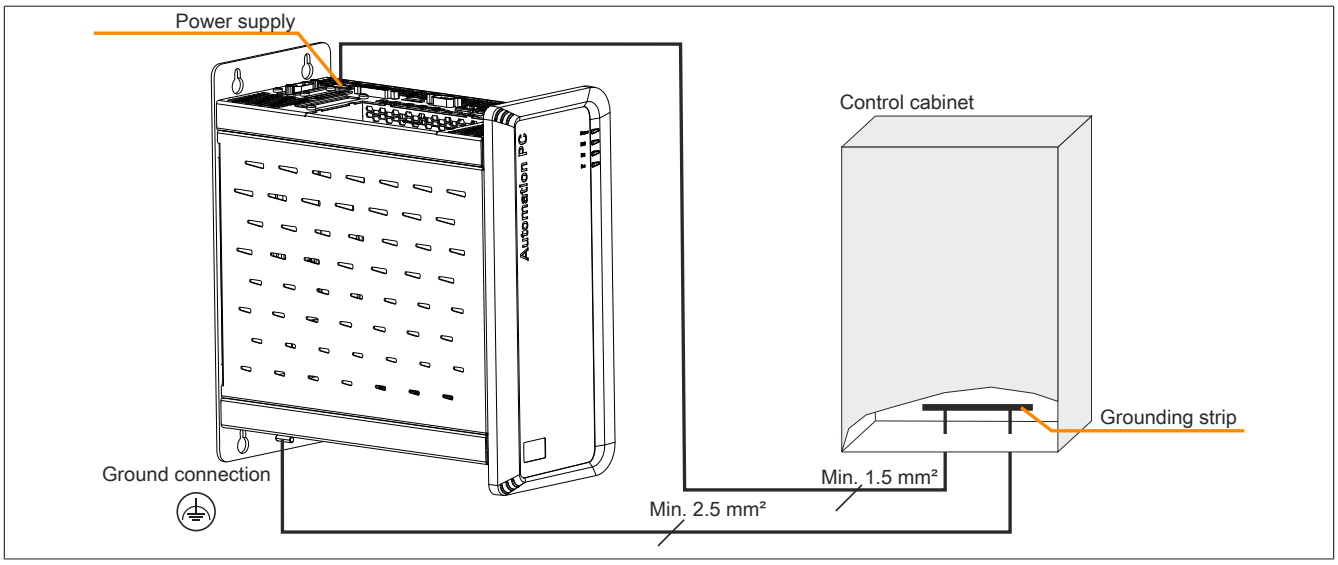

Figure 79: Grounding concept

4 General instructions for performing temperature testing

The purpose of these instructions is to explain general procedures for performing application-specific temperature testing on B&R Industrial PCs and Power Panels. Nevertheless, these instructions are meant to serve only as guidelines.

4.1 Procedure

In order to obtain accurate results, testing conditions should match conditions in the field. This means that for the duration of the temperature tests, the target application should be running, the PC should be installed in the control cabinet that will be used, etc.

In addition, a temperature sensor should be installed for the device being tested to provide live monitoring of the ambient temperature. In order to obtain accurate measurements, this sensor should be installed at a distance of 5 to 10 cm from the B&R Industrial PC near the air intake (not near the exhaust).

All B&R Industrial PCs and Power Panels are equipped with internal temperature sensors. They are installed at different locations for each device family. The number of sensors and temperature limits also vary from series to series.

For information about the locations of temperature sensors and maximum specified values, see section "Temperature sensor positions" in 2 "Technical data".

To ensure that the temperature situation is evaluated reliably, a minimum of 8 hours is recommended for testing.

4.2 Evaluating temperatures in Windows operating systems

4.2.1 Evaluating with the B&R Control Center

The B&R Control Center can be used to evaluate temperatures. The temperatures can be viewed on the "Temperatures" tab. The B&R Control Center is available at no cost in the Downloads section of the B&R website (www.br-automation.com). The B&R Control Center uses the B&R Automation Device Interface (ADI).

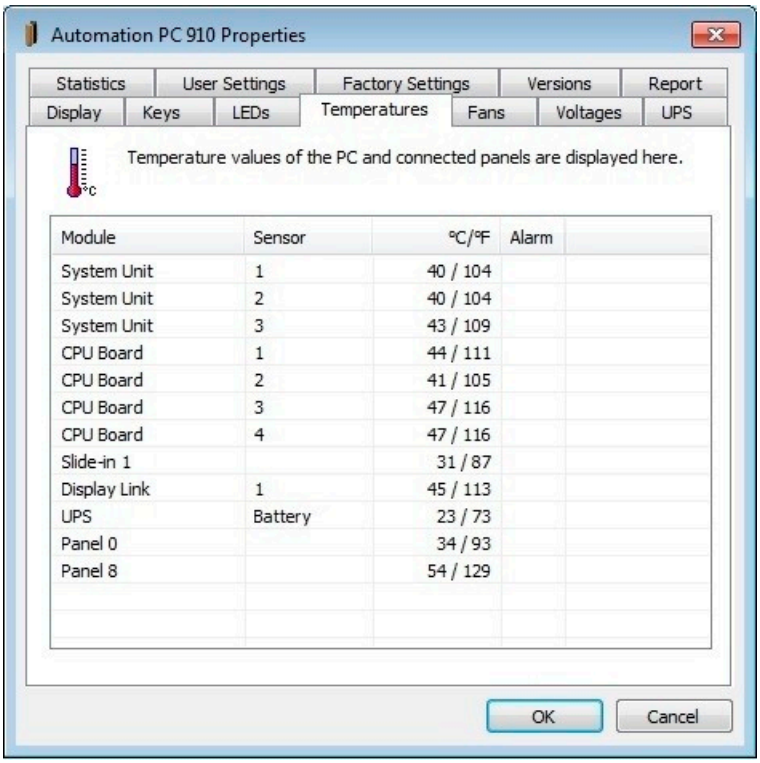

Module	Sensor	°C/°F	Alarm
System Unit	1	40 / 104	
System Unit	2	40 / 104	
System Unit	3	43 / 109	
CPU Board	1	44 / 111	
CPU Board	2	41 / 105	
CPU Board	3	47 / 116	
CPU Board	4	47 / 116	
Slide-in 1		31 / 87	
Display Link	1	45 / 113	
UPS	Battery	23 / 73	
Panel 0		34 / 93	
Panel 8		54 / 129	

A separate application can be developed if it is necessary to collect historical data.

> **Information:**
>
> **Software development kits such as the ADI .NET SDK are available on the B&R website (www.br-automation.com) to develop a separate application.**

4.2.2 Evaluating with the BurnInTest tool from Passmark

If a separate application is not developed or used to evaluate the temperature, then B&R recommends using the BurnInTest software tool from PassMark.

Standard and professional versions of BurnInTest are available. In addition to the software package, there are also various loopback adapters (serial, parallel, USB, etc.) and test CDs/DVDs available. The exact software and loopback adapters used will determine the corresponding load that can be generated on the system and peripheral devices.

Information:

Loopback adapters are also available from PassMark. More information is available at www.passmark.com.

The following screenshots are based on Passmark BurnInTest Pro V6 and a 2-slot APC910 with DVD.

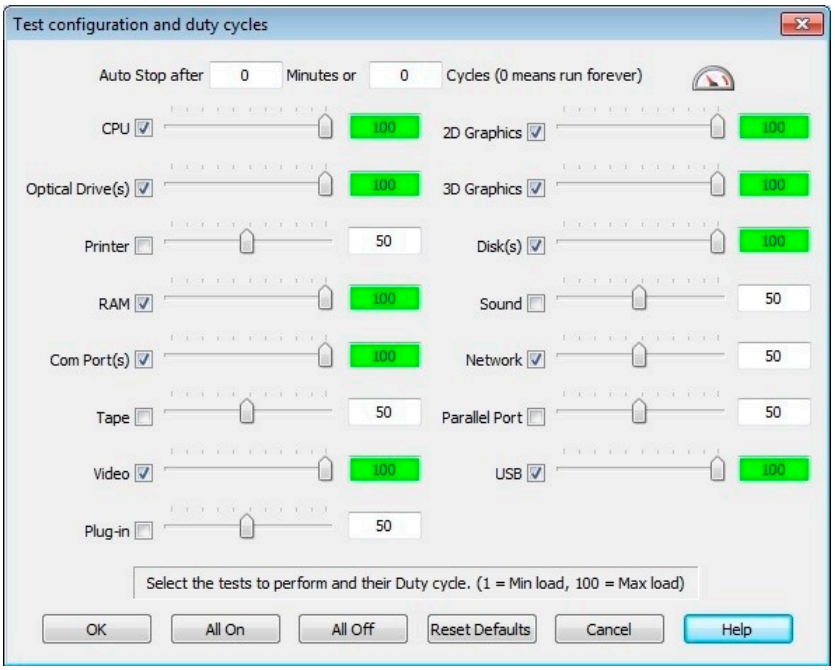

Figure 80: Settings for Passmark BurnInTest Pro V6 and a 2-slot APC910 with DVD

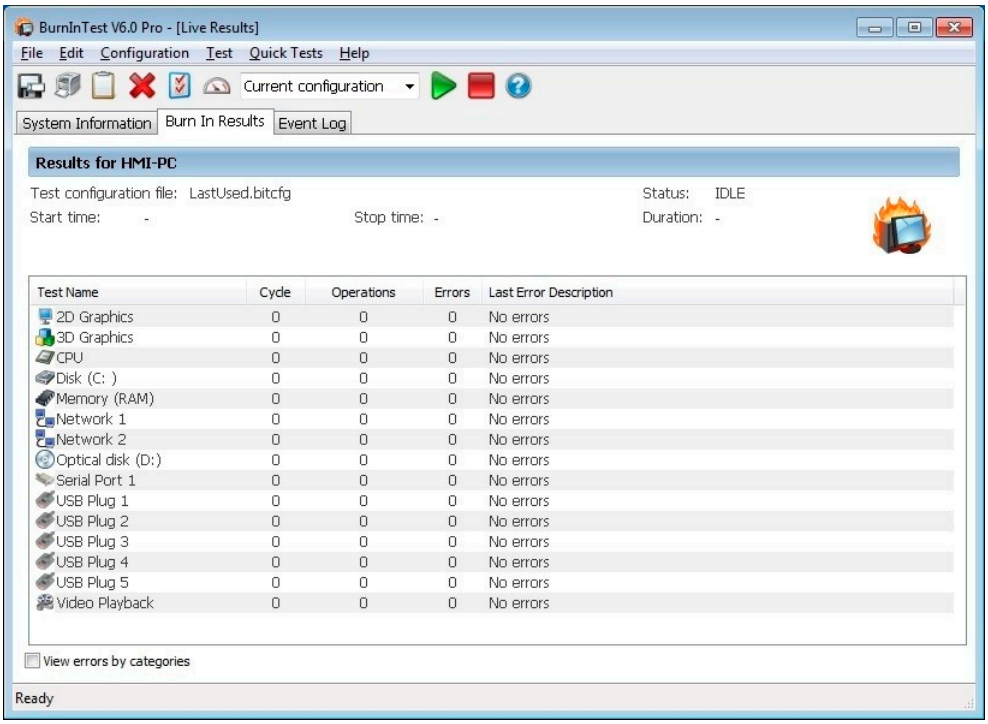

Figure 81: Test overview of a 2-slot APC910 with DVD

The respective test properties may need to be fine-tuned depending on the availability of a loopback plug and DVDs.

Information:

USB flash drives can also be used if no USB loopback adapters are available. The USB flash drives must be detected as formatted drives in Windows. The test USB must then be deselected, and the USB flash drives must be configured as the testing device in the disk properties.

Information:

Serial loopback adapters are relatively easy to create. Simply connect several pins on the serial interface with wires.

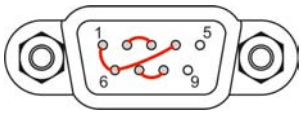

4.3 Evaluating temperatures in non-Windows operating systems

For applications that do not run in Windows, temperatures can be evaluated with the help of the B&R implementation guide. In addition to the implementation guide, there are also programs available in MS-DOS.

The implementation guide only describes device-specific functions, not the main functions of the sample programs.

If code from the sample programs is used, it is important to observe the notes in the implementation guide regarding TODO statements, I/O access functions, etc.

Information:

Sample programs and implementation guides for all B&R Industrial PCs and Power Panels are available at no cost from the B&R website (www.br-automation.com).

4.4 Evaluating the measurement results

The maximum temperature value recorded by each sensor is not permitted to exceed the temperature limits specified in the user's manuals.

If the temperature tests cannot be performed in a climate-controlled chamber, they can still be performed in an office environment. However, it is necessary to measure the ambient temperature in this case. Experience at B&R has shown that values measured on passive systems (systems without a fan kit) can be projected linearly based on the ambient temperature. In order to be able to project the temperature values for systems with a fan kit, the fans must be running. It is also important to take values such as speed into consideration.

If the temperature tests are performed in a climate-controlled chamber with fans, the fans will cool the devices being tested and distort the results. Measurement results for passive devices are therefore unusable. In order to obtain accurate results in climate-controlled chambers with fans, the fans must be turned off and the device must be allowed to run for a sufficient amount of time (several hours) before beginning the test.

5 Configuring a SATA RAID set

Information:

The following software description is valid for 5ACPCI.RAIC-01, 5ACPCI.RAIC-03, 5ACPCI.RAIC-05 and 5ACPCI.RAIC-06 PCI SATA controllers.

The "RAID Configuration Utility" in BIOS must be started in order to make the necessary settings. After POST, pressing <Ctrl+S> or <F4> opens the RAID BIOS.

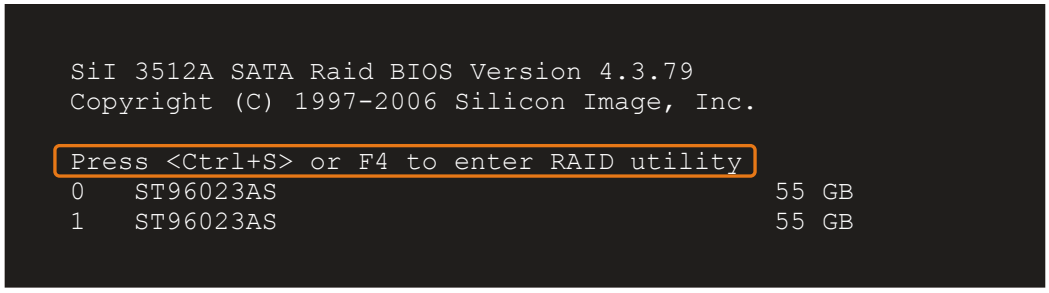

Figure 82: Open the RAID Configuration Utility

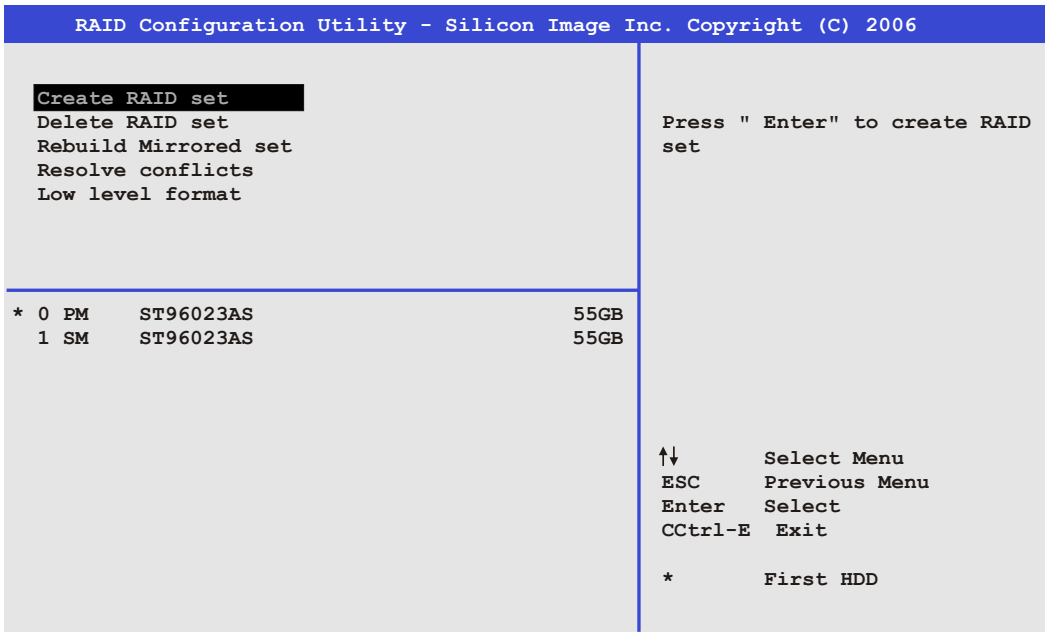

Figure 83: RAID Configuration Utility - Menu

The following keys can be used once inside BIOS Setup:

Key	Function
Cursor ↑	Moves to the previous item
Cursor ↓	Moves to the next item
Enter	Selects an item or opens a submenu
ESC	Returns to the previous menu
Ctrl+E	Saves any changed settings and exits setup

Table 173: BIOS-relevant keys in the RAID Configuration Utility

5.1 Create RAID set

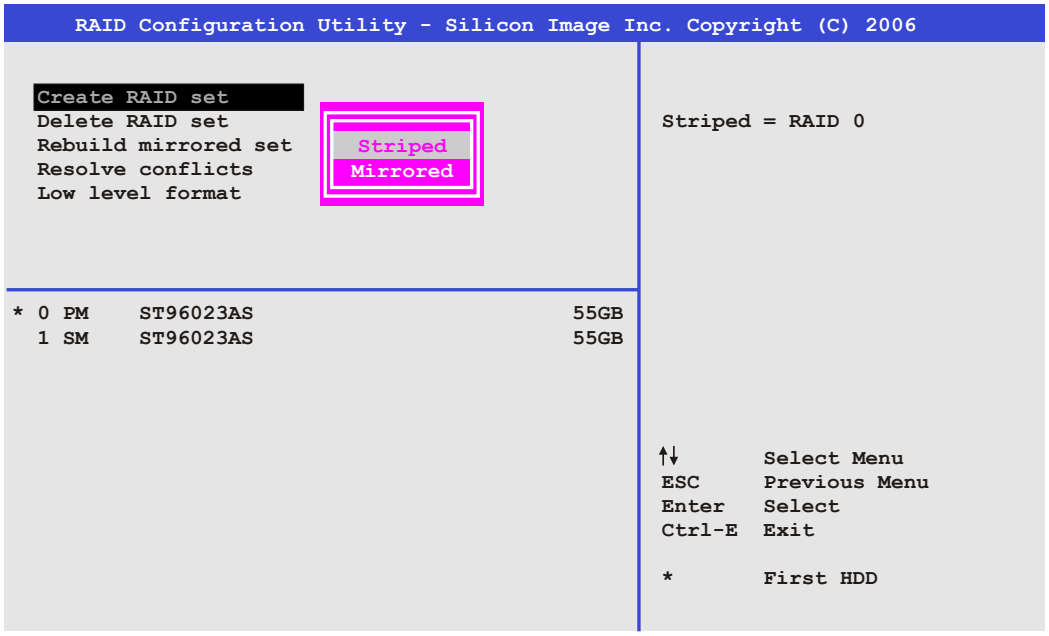

Figure 84: RAID Configuration Utility - Menu

The RAID system can be set up as "Striped" = RAID0 or "Mirrored" = RAID1 using the "Create RAID set" menu option.

5.2 Create RAID set - Striped

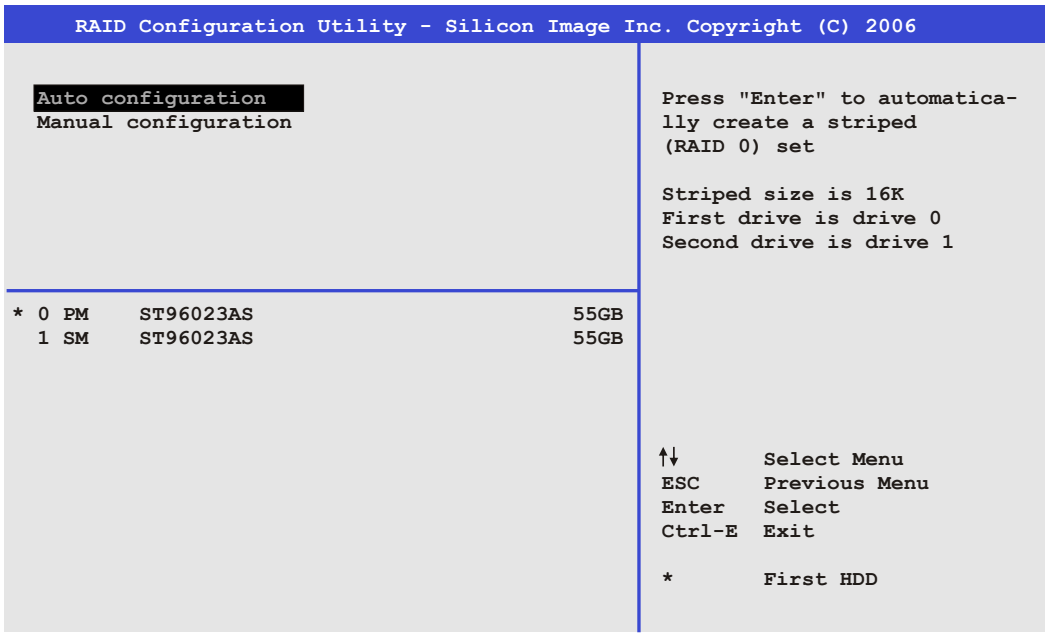

Figure 85: RAID Configuration Utility - Create RAID set - Striped

"Auto configuration"
Auto configuration optimizes all settings.

"Manual configuration"
Allows the first and second HDD to be specified as well as the "Chunk size" (i.e. block size, application-dependent).

5.3 Create RAID set - Mirrored

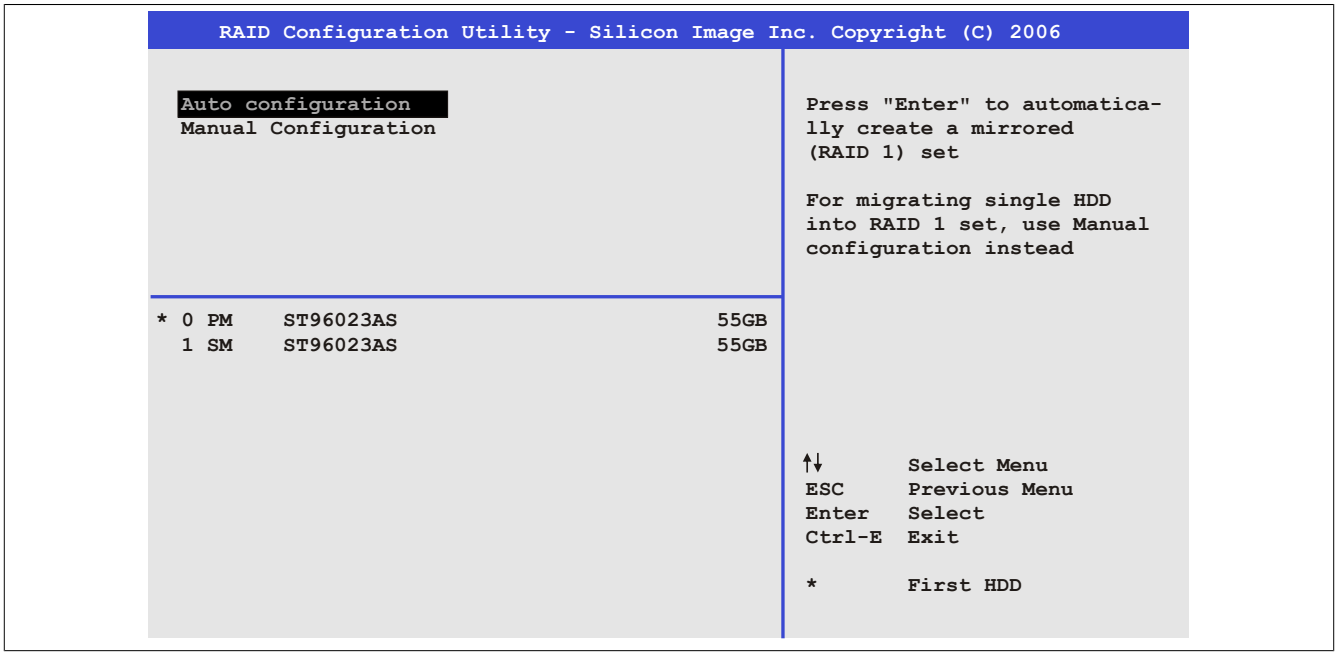

Figure 86: RAID Configuration Utility - Create RAID set - Mirrored

"Auto configuration"
Auto configuration optimizes all settings.

"Manual configuration"
Allows the "Source" and "Target" HDD to be specified as well as whether a rebuild (mirror) should be performed immediately (takes approx. 50 minutes).

5.4 Delete RAID set

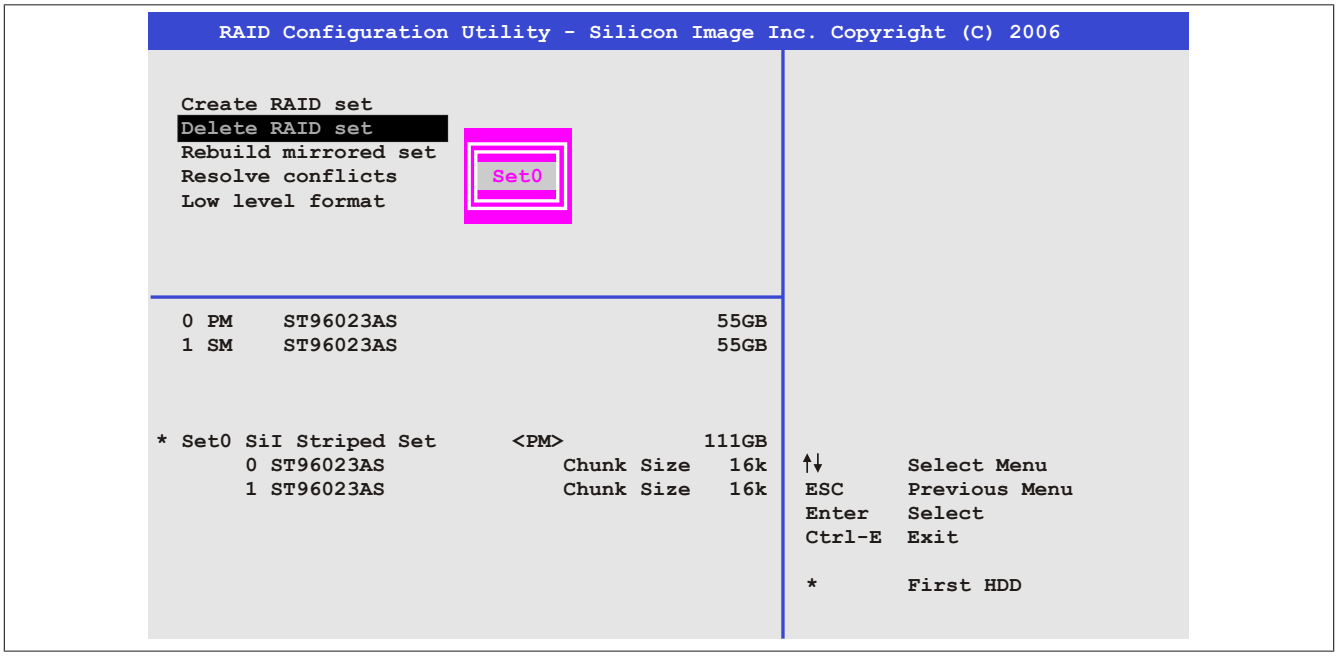

Figure 87: RAID Configuration Utility - Delete RAID set

An existing RAID set can be deleted using the "Delete RAID set" menu option.

5.5 Rebuild mirrored set

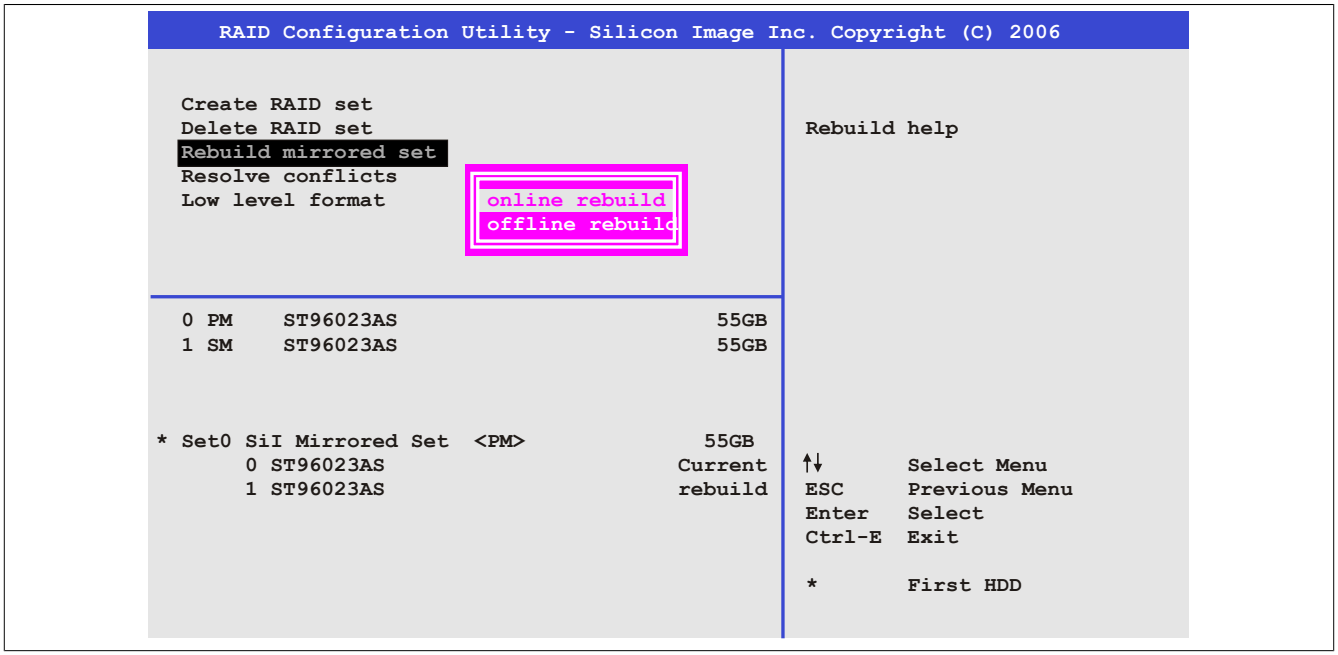

Figure 88: RAID Configuration Utility - Rebuild mirrored set

The "Rebuild mirrored set" menu option can be used to restart a rebuild procedure in a RAID 1 set if an error occurs, if a rebuild procedure was interrupted or if a hard disk was replaced.

If "Online rebuild" is selected, then the rebuild is executed during operation after the system is booted. The installed SATA RAID configuration program may display an event pop-up message: `SATA Raid detected a new event` before restarting the rebuild. The entire rebuild takes approximately 50 minutes.

If "Offline rebuild" is selected, then a rebuild is performed immediately before the operating system is started (duration depends on the respective memory size).

5.6 Resolve conflicts

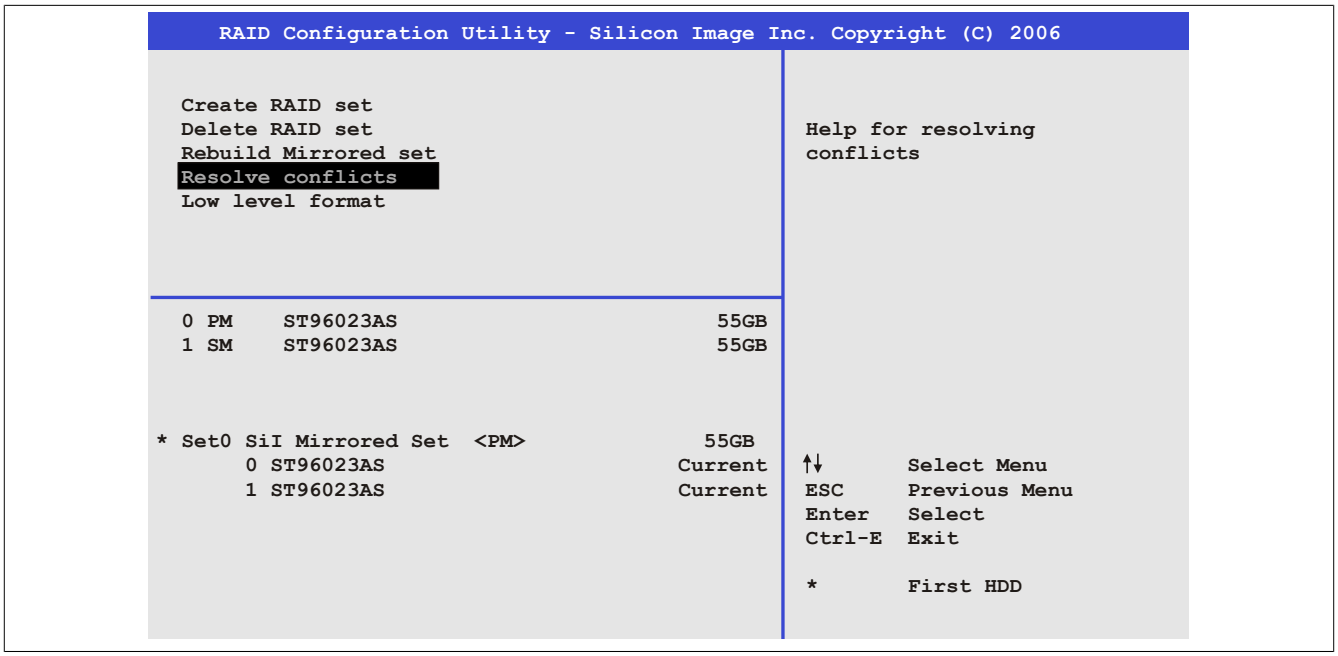

Figure 89: RAID Configuration Utility - Resolve conflicts

Conflicts in a RAID set can be resolved using the "Resolve conflicts" menu option. This function is only available if the status of the hard disk is "Conflict".

5.7 Low level format

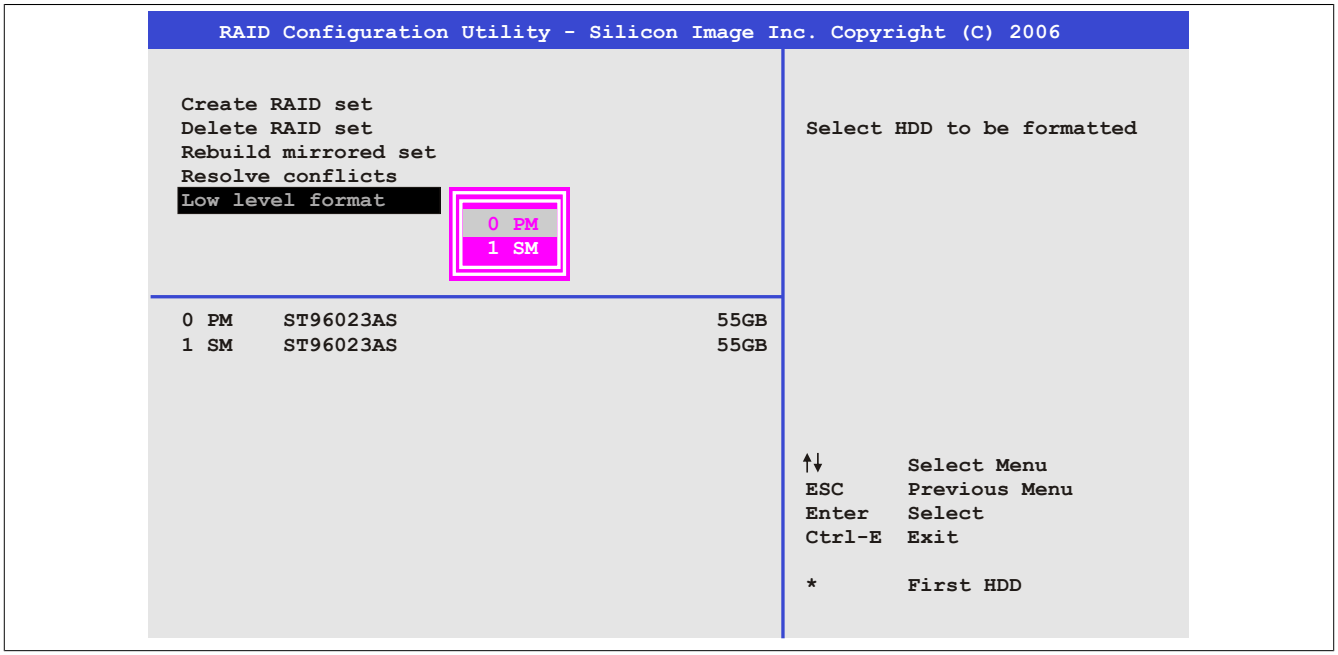

Figure 90: RAID Configuration Utility - Low level format

Individual hard disks can be configured using the "Low level format" menu option. This can only be done if a RAID set is not configured. A low level format of a hard drive takes approx. 40 minutes.

6 Configuring a SATA RAID set using the internal RAID controller

The following software description applies to the internal RAID controller on the QM77 chipset. The HM76 chipset does not provide RAID support.

Information:

B&R recommends using only drives of the same type in a SATA RAID set (hard disk with hard disk in a set, SSD with SSD in a set; CFast with CFast in a set).

Caution!

The maximum number of possible write cycles must be taken into consideration when setting up a RAID set with SSDs or CFast cards (with MLC technology).

In order to create a SATA RAID set and get into the "Configuration Utility", *SATA mode selection* must be set to *RAID* in the "Advanced - SATA configuration" menu.

The "Configuration Utility" in BIOS must be started in order to make the necessary settings. After POST, pressing <Ctrl+I> opens the RAID BIOS.

```
Intel(R) Rapid Storage Technology - Option ROM - 11.6.0.1624
Copyright(C) 2003-12 Intel Corporation. All Rights Reserved.


 RAID Volumes:
 ID  Name     Level              Strip            Size  Status          Bootable
 0   Mirror   RAID1(Mirror)      N/A            465.8GB  Normal             Yes

 Pyhsical Devices:
 ID  Device   Model        Serial #                Size  Type/Status(Vol ID)
 0   WDC      WD500LUCT-6  WD-WX21AB2X6150       465.7GB  Member Disk(0)
 2   WDC      WD500LUCT-6  WD-WX21AB2X6150       465.7GB  Member Disk(0)

Press <CTRL-I> to enter Configuration Utility..
```

Figure 91: Configuration Utility - Boot

```
              Intel(R) Rapid Storage Technology - Option ROM - 11.6.0.1624
              Copyright(C) 2003-12 Intel Corporation. All Rights Reserved.
                                  [ MAIN MENU ]
            1.  Create RAID Volume          4.  Recovery Volume Options
            2.  Delete RAID Volume          5.  Acceleration Options
            3.  Reset Disks to Non-RAID     6.  Exit
                              [ DISK/VOLUME INFORMATION ]
 RAID Volumes:
 ID  Name     Level              Strip            Size  Status          Bootable
 0   Mirror   RAID1(Mirror)      N/A            465.8GB  Normal             Yes

 Pyhsical Devices:
 ID  Device   Model        Serial #                Size  Type/Status(Vol ID)
 0   WDC      WD500LUCT-6  WD-WX21AB2X6150       465.7GB  Member Disk(0)
 2   WDC      WD500LUCT-6  WD-WX21AB2P6063       465.7GB  Member Disk(0)

        [↑↓]-Select              [ESC]-Exit              [ENTER]-Select Menu
```

Figure 92: Configuration Utility - Overview

The following keys can be used once inside BIOS Setup:

Key	Function
Cursor ↑	Moves to the previous item
Cursor ↓	Moves to the next item
Enter	Selects an item or opens a submenu
ESC	Returns to the previous menu
Ctrl+E	Saves any changed settings and exits setup

Table 174: BIOS-relevant keys in the RAID Configuration Utility

6.1 Create RAID volume

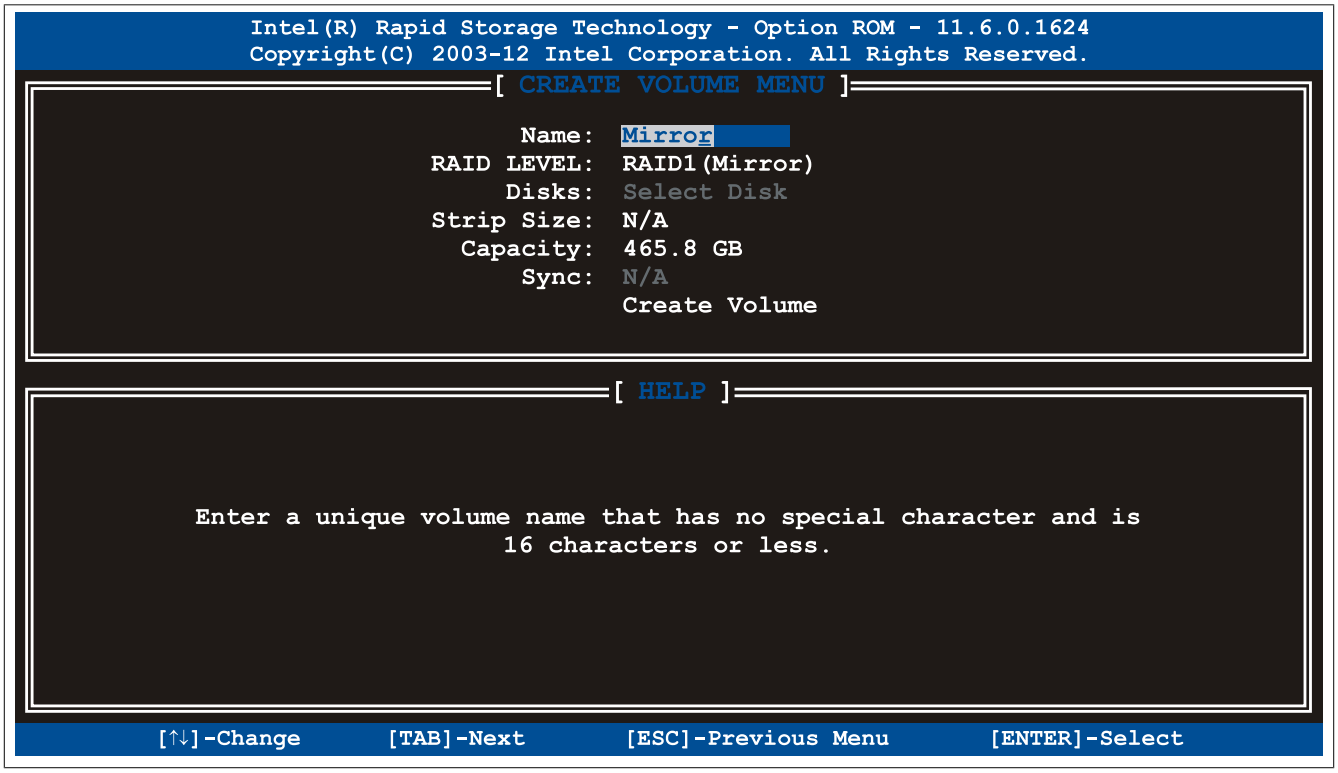

Figure 93: Configuration Utility - Create RAID volume

Parameter	Function	Configuration options	Effect
Name	Option for entering the RAID name	Name with up to 16 characters	Assigns a name to the RAID volume
RAID level	Option for setting the RAID level	RAID0 (Stripes)	Creates RAID0
		RAID1 (Mirror)	Creates RAID1
		Recovery	Creates recovery RAID
Disks[1)]	Specifies the installed hard disks as either master or recovery	Master, Recovery	Defines the hard disks as master or recovery
Strip size[2)]	Option for configuring the size of data blocks	4 kB, 8 kB, 16 kB, 32 kB, 64 kB, 128 kB	Configures the size of the data block
Capacity	Option for configuring the RAID capacity		Configures the memory size of the RAID volume
Sync[3)]	Option for configuring RAID synchronization	N/A	-
		Continuous	Automatically synchronizes the RAID volume
		On request	Manually synchronizes the RAID volume
Create volume	Creates the RAID volume	-	Creates the RAID volume

Table 175: Configuration Utility - Create RAID volume

1) This setting is only possible if *RAID level* is set to *Recovery*.
2) This setting is only possible if *RAID level* is set to *RAID0(Stripe)*.
3) This setting is only possible if *RAID level* is set to *Recovery*.

6.2 Delete RAID volume

The "Delete RAID volume" menu option can be used to format the RAID drive, making it non-RAID. The drive to be deleted is selected and then deleted by pressing <DEL>.

Information:

This option deletes all data on the drive, including the operating system.

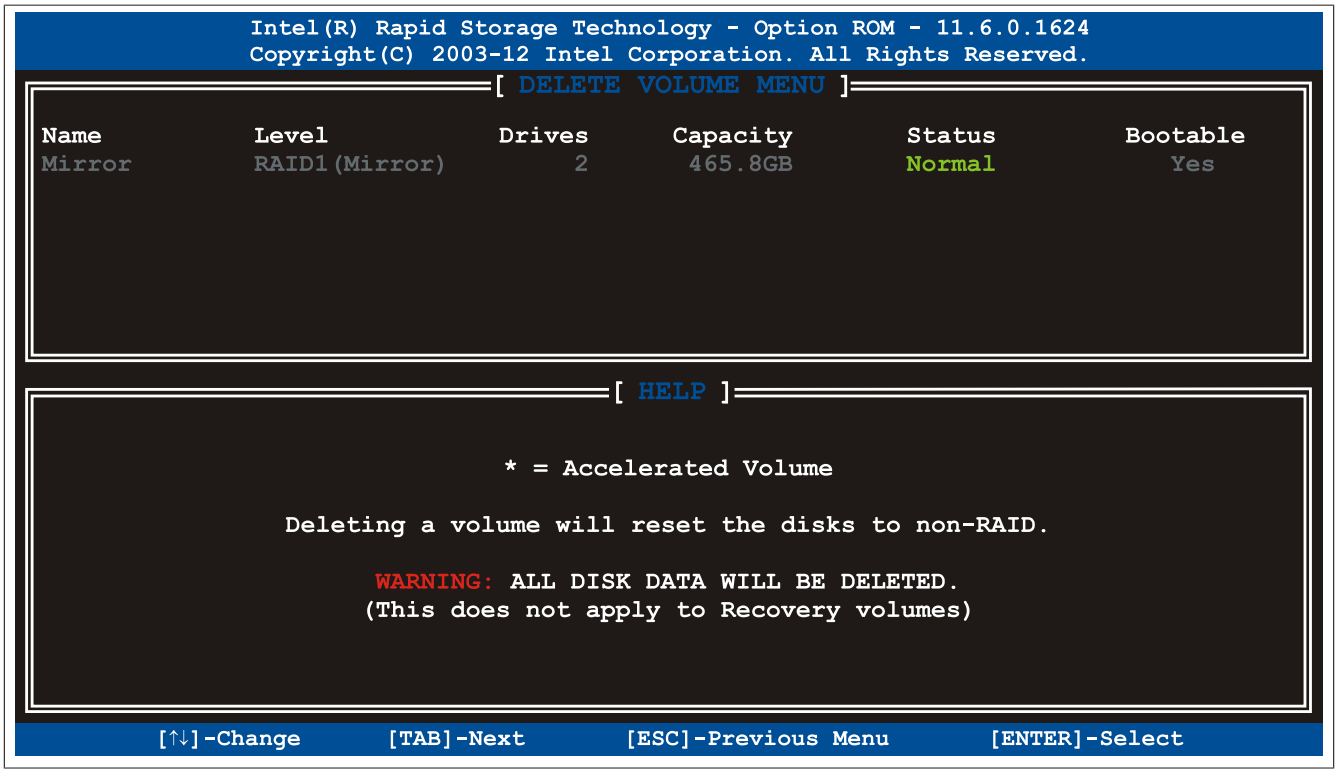

Figure 94: Configuration Utility - Delete RAID volume

6.3 Reset disks to non-RAID

An existing RAID set can be deleted using the "Reset disks to non-RAID" option. The RAID to be deleted is selected and then deleted by pressing <SPACE> (<ENTER> to confirm).

Information:

Deleting a RAID set also deletes all of the data on the drive.

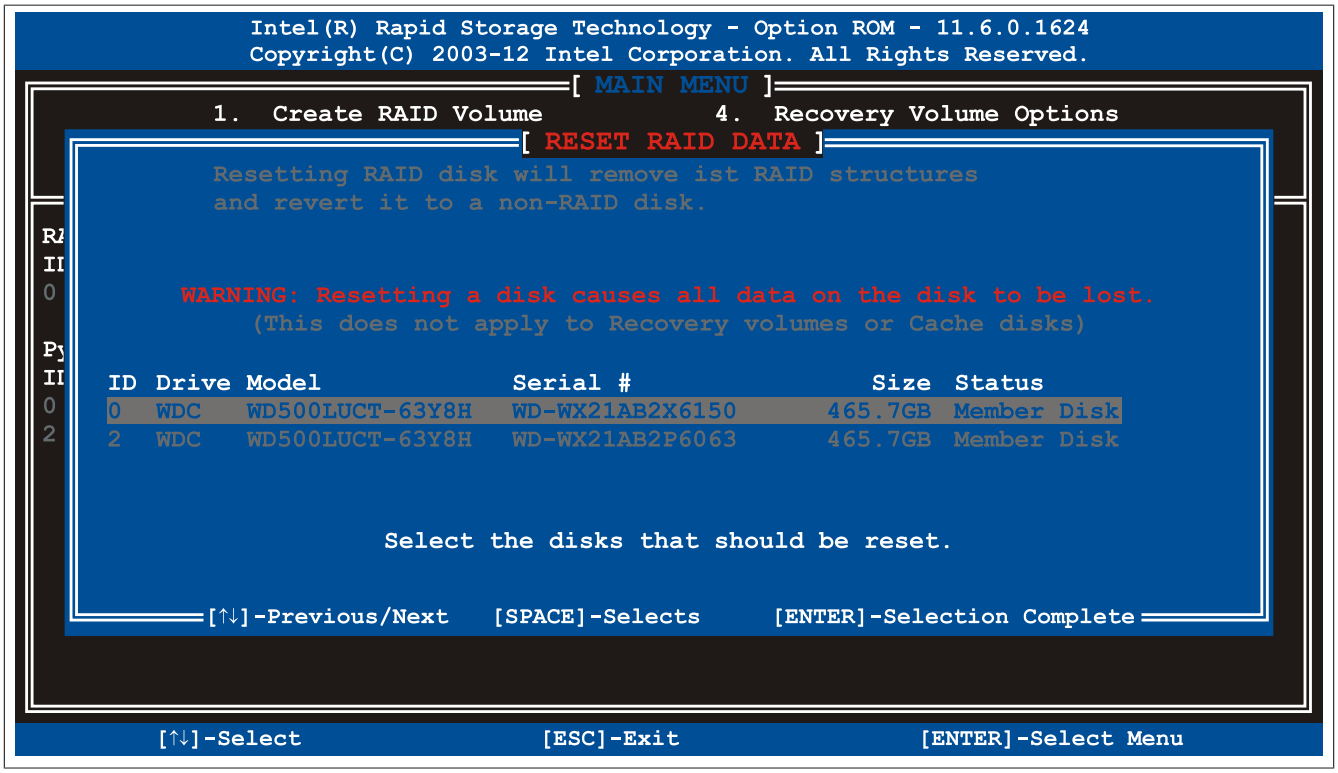

Figure 95: Configuration Utility - Reset disks to non-RAID

6.4 Recovery volume options

The "Recovery volume options" menu option can be used to enable/disable recovery disk and master disk.

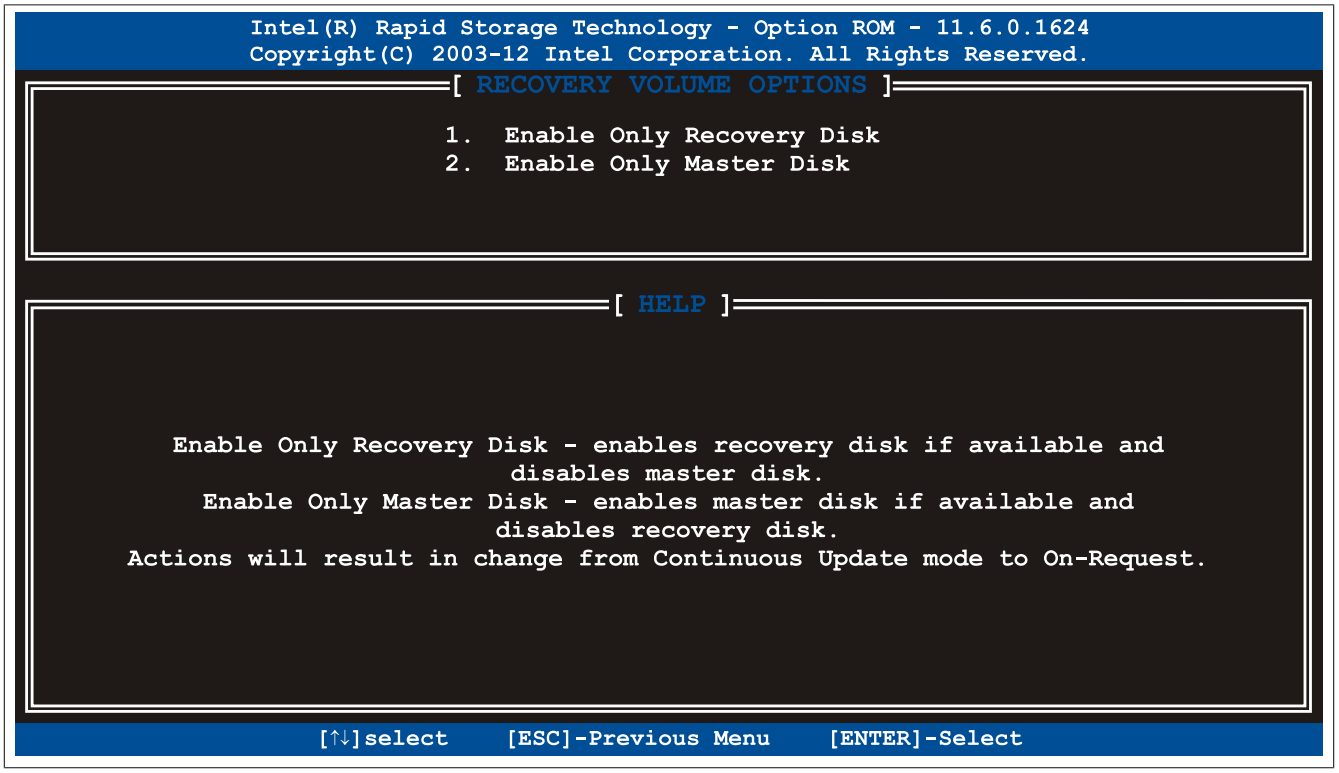

Figure 96: Configuration Utility - Recovery volume options

7 Known problems / Issues

- The CAN IF option is supported in PVI for Windows XP Professional and Windows Embedded Standard 2009. The 5AC901.ICAN-00 interface option is no longer supported by PVI V4.2.5 or Windows CAN Driver V3.0 beginning with Windows 7.
- Support for three independent displays is only possible in the following combination:
  - 1x DisplayPort monitor connected directly to the Automation PC's DisplayPort interface
  - 1x DisplayPort monitor connected via the 5AC901.LDPO-00 monitor/panel option
  - 1x SDL/DVI or RGB connected via the monitor/panel interface
- When using a PCI or PCIe RAID controller, we recommend disabling ASPM or power management for the respective PCI or PCIe slot.
- The USB 2.0 transfer rate is limited to 30 Mbit/s with SDL3.
- The SDL3 transmitter continuously emulates a display using EDID data and hot plugging code, which allows DVI-compatible operation. For this reason, operating multiple displays may result in incorrect graphic representations. This can occur in the following circumstances:
  - No cable connected
  - No connection established between the SDL3 link module and the SDL3 receiver

  It is possible to get around these incorrect graphic representations by making suitable settings to BIOS or the graphics driver.
- If problems occur with the ETH1 interface (connection aborted, slow data transfer, etc.), one possible solution is to disable the EEE feature (Energy Efficient Ethernet) in the driver.

Chapter 4 • Software

1 BIOS options

Information:

The following diagrams, BIOS menu items and their descriptions refer to BIOS version 1.23. It is therefore possible that these diagrams and BIOS descriptions will not correspond with the BIOS version actually installed. In addition, the BIOS menu items provided depend on the system configuration.

1.1 General information

BIOS is an acronym for "Basic Input/Output System". It is the most basic standardized interface between the user and the system (hardware). The BIOS system used in this B&R Industrial PC was developed by American Megatrends, Inc.

The BIOS Setup utility can be used to modify basic system configuration settings. These settings are stored in CMOS and EEPROM memory (as a backup).

CMOS data is buffered by a battery (if present) and remains stored on the B&R Industrial PC even when the power is turned off (no 24 VDC supply).

1.2 BIOS Setup and boot procedure

BIOS is activated immediately when switching on the power supply or pressing the power button on the B&R Industrial PC. The system checks if the setup data from EEPROM memory is "OK". If the data is "OK", then it is transferred to CMOS. If the data is "Not OK", then the CMOS data is checked to see whether it is valid. An error message is output if the CMOS data contains errors, and the boot procedure can be continued by pressing <F1>. To prevent an error message from appearing on each restart, launch the BIOS Setup utility by pressing <F2> and resave the settings.

BIOS reads the system configuration information, checks and configures the system with the Power-On Self-Test (POST).

When these "preliminaries" are finished, BIOS looks for an operating system on the available data storage devices (hard drive, floppy drive, etc.). BIOS then launches the operating system and hands over to it the control of system operations.

To enter BIOS Setup, press the <Del> key after the USB controller has been initialized as soon as the following message appears on the screen (during POST): "Press DEL to run SETUP".

Figure 97: Bootscreen

1.2.1 BIOS Setup keys

The following keys are enabled during POST:

> **Information:**
>
> **Key signals from USB keyboards will only be registered after the USB controller has been initialized.**

Keys	Function
Del, F2	Opens the main BIOS Setup screen
F12	Network boot
F11	Opens the boot menu. This lists all bootable devices that are connected to the system. Selecting a device with cursor ↑, cursor ↓ and then pressing <ENTER> will boot from that device. 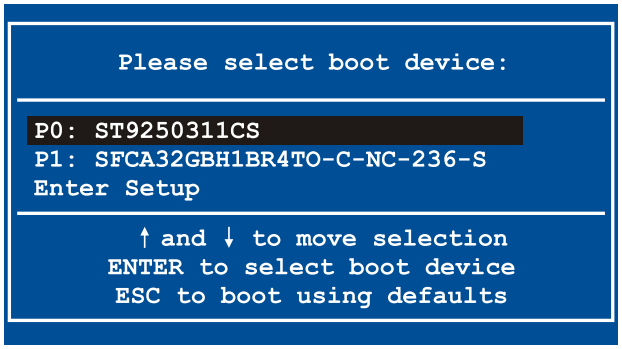
<Pause>	Pauses POST. Pressing any other key resumes POST.

Table 176: BIOS-relevant keys for POST

The following keys can be used once inside BIOS Setup:

Key	Function
F1	Opens general help information
Cursor ↑	Moves to the previous item
Cursor ↓	Moves to the next item
Cursor ←	Moves to the previous item
Cursor →	Moves to the next item
+-	Changes the setting for the selected function
Enter	Changes to the selected screen
Page ↑	Changes to the previous page
Page ↓	Changes to the next page
Home	Jumps to the first BIOS menu item or object
End	Jumps to the last BIOS menu item or object
F2 / F3	Changes the colors of BIOS Setup
F7	Resets any changes
F9	Loads and configures CMOS default values for all BIOS settings
F10	Saves and exits
ESC	Exits a submenu

Table 177: BIOS-relevant keys

1.3 Main

The main BIOS Setup screen appears immediately after the <Del> button is pressed during startup.

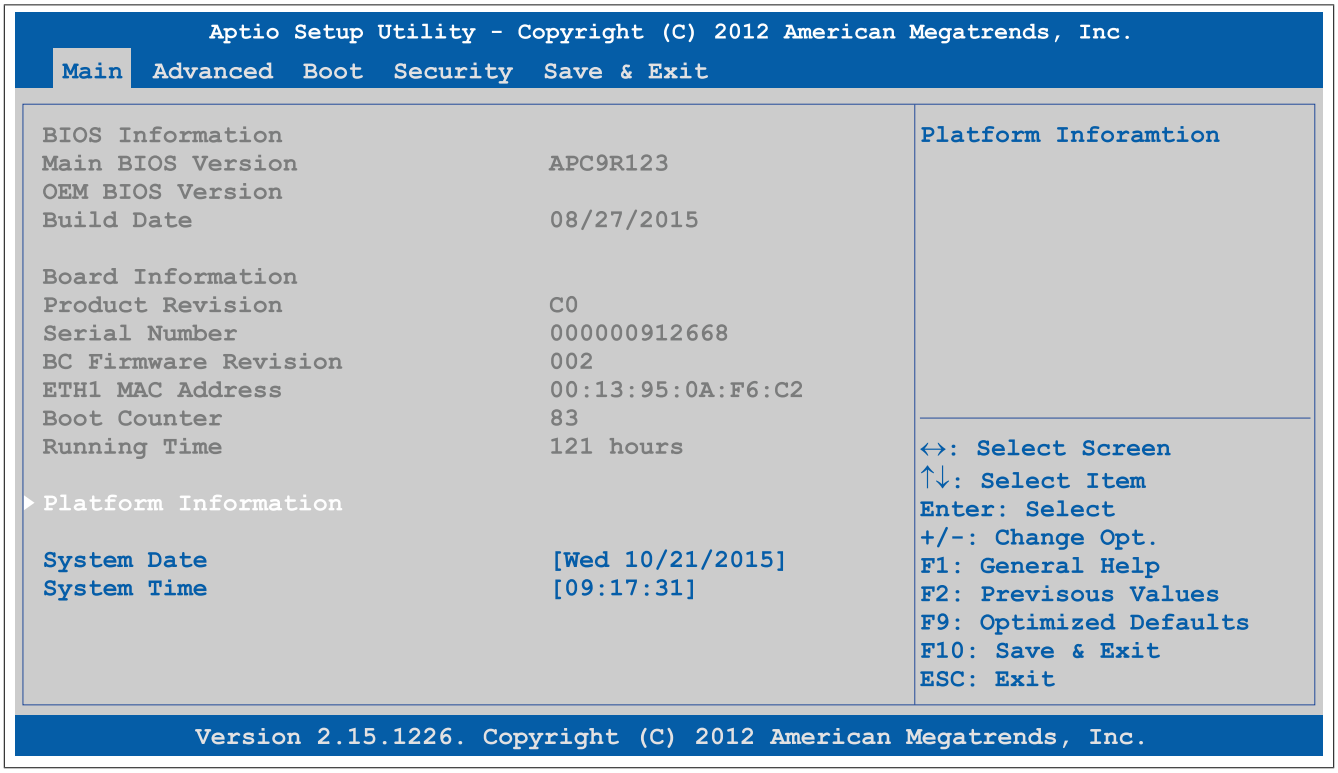

Figure 98: Main

BIOS setting	Function	Configuration options	Effect
BIOS information			
Main BIOS version	Displays the BIOS version	None	-
OEM BIOS version	Displays the OEM BIOS version	None	
Build date	Displays the date the BIOS was created	None	-
Board information			
Product revision	Displays the hardware revision of the CPU board	None	-
Serial number	Displays the serial number of the CPU board	None	-
BC firmware revision	Displays the firmware revision of the CPU board controller	None	-
ETH1 MAC address	Displays the assigned MAC address for the ETH interface	None	-
Boot counter	Displays the boot counter; each restart increases the counter by one (max. 16777215)	None	-
Running time	Displays the runtime in hours (max. 65535)	None	-
Platform information	Displays information about the chipset, CPU board and main memory	Enter	Opens this submenu See "Platform information" on page 216.
System date	The currently configured system date. This is buffered by the CMOS battery when the system is switched off.	Change the system date	Sets the system date in the format Month:Day:Year (mm:dd:yyyy)
System time	The currently configured system time setting. This is buffered by the CMOS battery when the system is switched off.	Change the system time	Sets the system time in the format Hour:Minute:Second (hh:mm:ss)

Table 178: Main - Configuration options

1.3.1 Platform information

```
Aptio Setup Utility - Copyright (C) 2012 American Megatrends, Inc.
Main

Processor Information                                  Platform Inforamtion
Name                                IvyBridge
Brand String                        Intel(R) Core(TM) i7-351
Frequency                           1600 MHZ
Processor ID                        306a8
Stepping                            E1
Number of Processes                 2Core(s) / 4 Thread(s)
Microcode Revision                  19
GT Info                             GT2 (1000 MHz)

IGFX VBIOS Verison                  2170
Memory RC Version                   1.8.0.0                    ↔: Select Screen
Total Memory                        16384 MB (DDR3)            ↑↓: Select Item
Memory Frequency                    1067 MHz                   Enter: Select
                                                               +/-: Change Opt.
PCH Information                                                F1: General Help
Name                                PantherPoint               F2: Previsous Values
Intel PCH SKU Name                  QM77                       F9: Optimized Defaults
Stepping                            O4/C1                      F10: Save & Exit
LAN PHY Revision                    C0                         ESC: Exit

ME FW Version                       N/A
ME Firmware SKU                     N/A

SPI Clock Frequency
DOFR Support                        Supported
Read Status Clock Frequency         33 MHz
Write Status Clock Frequency        33 MHz
Fast Read Status Clock Frequency    50 MHz
Version 2.15.1226. Copyright (C) 2012 American Megatrends, Inc.
```

Figure 99: Main - Platform Information

BIOS setting	Function	Configuration options	Effect
Processor information			
Name	Displays the processor architecture	None	-
Brand string	Displays the processor type	None	-
Frequency	Displays the processor frequency	None	-
Processor ID	Displays the processor ID	None	-
Stepping	Displays the processor stepping version	None	-
Number of processors	Displays the number of processor cores/threads	None	-
Microcode revision	Displays the processor microcode revision	None	-
GT info	Displays GT information	None	-
IGFX VBIOS version	Displays the IGFX VBIOS version	None	-
Memory RC version	Displays the memory RC version	None	-
Total memory	Displays the system memory size	None	-
Memory frequency	Displays the RAM frequency	None	-
PCH information			
Name	Displays the platform controller hub	None	-
Intel PCH SKU name	Displays the chipset on the CPU board	None	-
Stepping	Displays the chipset stepping version	None	-
LAN PHY revision	Displays the LAN revision	None	-
ME FW version	Displays the Intel management engine firmware version	None	-
ME firmware SKU	Displays the Intel management stock-keeping unit version	None	-
SPI clock frequency			
DOFR support	Displays information about DOFR support	None	-
Read status clock frequency	Displays the clock frequency read status	None	-
Write status clock frequency	Displays the clock frequency write status	None	-
Fast read status clock frequency	Displays the fast read status clock frequency	None	-

Table 179: Main - Platform information - Overview

1.4 Advanced

```
Aptio Setup Utility - Copyright (C) 2012 American Megatrends, Inc.
Main  Advanced  Boot  Security  Save & Exit

▶ Graphics Configuration                 Graphics Configuration
▶ Hardware Health Monitoring             Submenu
▶ OEM Features
▶ PCI Configuration
▶ PCI Express Configuration
▶ ACPI Settings
▶ RTC Wake Settings
▶ CPU Configuration
▶ Chipset Configuration
▶ SATA Configuration
▶ Memory Configuration
▶ USB Configuration
▶ Serial Port Console Redirection

                                         ↔: Select Screen
                                         ↑↓: Select Item
                                         Enter: Select
                                         +/-: Change Opt.
                                         F1: General Help
                                         F2: Previsous Values
                                         F9: Optimized Defaults
                                         F10: Save & Exit
                                         ESC: Exit

Version 2.15.1226. Copyright (C) 2012 American Megatrends, Inc.
```

Figure 100: Advanced Übersicht

BIOS setting	Function	Configuration options	Effect
Graphics configuration	Configures graphics settings	Enter	Opens this submenu See "Graphics configuration" on page 218.
Hardware health monitoring	Displays the current voltage levels as well as the CPU and mainboard temperatures	Enter	Opens this submenu See "Hardware health monitoring" on page 220.
OEM features	Configures OEM features	Enter	Opens this submenu See "OEM features" on page 221.
PCI configuration	Configures PCI devices	Enter	Opens this submenu See "PCI configuration" on page 242.
PCI express configuration	Configures PCI Express devices	Enter	Opens this submenu See "PCI express configuration" on page 244.
ACPI settings	Configures ACPI settings	Enter	Opens this submenu See "ACPI settings" on page 250.
RTC wake settings	Configures the start time when switched off	Enter	Opens this submenu See "RTC wake settings" on page 251.
CPU configuration	Configures CPU settings	Enter	Opens this submenu See "CPU configuration" on page 252.
Chipset configuration	Configures chipset settings	Enter	Opens this submenu See "Chipset configuration" on page 255.
SATA configuration	Configures SATA settings	Enter	Opens this submenu See "SATA configuration" on page 257.
Memory configuration	Configures main memory settings	Enter	Opens this submenu See "Memory configuration" on page 260.
USB configuration	Configures USB settings	Enter	Opens this submenu See "USB configuration" on page 263.
Serial port console redirection	Configures the remote console	Enter	Opens this submenu See "Serial port console redirection" on page 266.

Table 180: Advanced - Overview

1.4.1 Graphics configuration

```
Aptio Setup Utility - Copyright (C) 2012 American Megatrends, Inc.
Advanced

Primary Display                    [Auto]

Internal Graphics                  [Auto]
IGFX VBIOS Version                 2170
GTT Size                           [2MB]
Aperture Size                      [256MB]
DVMT Pre-Allocated                 [64MB]
DVMT Total Gfx Mem                 [256MB]
Gfx Low Power Mode                 [Disabled]
Graphics Performance Analyzers     [Disabled]

Primary IGFX Boot Display          [EFP2]
Secondary IGFX Boot Display        [CRT]

Active LFP Configuration           [No Local Flat Panel]

Display Port B Interface           [Display Port]
Display Port C Interface           [Disabled]
Display Port D Interface           [HDMI/DVI]

Display Mode Persistance           [Disabled]

Select which of
IGFX/PEG/PCI Graphics
device should be Primary
Display or select SG for
Switchable Gfx.

↔: Select Screen
↑↓: Select Item
Enter: Select
+/-: Change Opt.
F1: General Help
F2: Previsous Values
F9: Optimized Defaults
F10: Save & Exit
ESC: Exit

Version 2.15.1226. Copyright (C) 2012 American Megatrends, Inc.
```

Figure 101: Advanced - Graphics Configuration

BIOS setting	Function	Configuration options	Effect
Primary display	Option for selecting the primary display device	Auto	Configures the display device automatically
		IGD	Uses the internal graphics chip on the CPU board as the display device
		PEG	Uses an external PCI Express graphics card connected to the x16 PEG port as the display device
		PCI	Uses the graphics chip of a connected graphics card as the display device
Internal graphics	Option for configuring the internal graphics chip	Auto	Enables the internal graphics chip
		Disabled	Disables the internal graphics chip
		Enabled	Enables the internal graphics chip
IGFX VBIOS version	Displays the IGFX BIOS version	None	-
GTT size	Option for setting the GTT size	1 MB	1 MB GTT
		2 MB	2 MB GTT
Aperture size	Option for configuring the maximum amount of RAM made available to the main memory when graphics memory is full	128M	Reserves 128 MB
		256M	Reserves 256 MB
		512M	Reserves 512 MB
DVMT pre-allocated	Option for setting the fixed amount of memory used for the internal graphics controller	32 MB, 64 MB, 96 MB up to 1024 MB	Defines the fixed graphic memory as a value between 32 and 1024 MB
DVMT total gfx mem	Option for setting the amount of memory that can be used for the internal graphics controller. Memory over the permanently assigned graphics memory is assigned dynamically according to the DVMT 5.0 standard.	128M	Allocates 128 MB of main memory
		256M	Allocates 256 MB of main memory
		MAX	Allocates the entire main memory
Gfx low power mode	Option for setting the power saving function for the graphics controller **Information:** **This option can only be used for SFF.**	Enabled	Enables low power mode. The graphics controller does not operate at full speed.
		Disabled	Disables low power mode
Graphics performance analyzers	Option for enabling/disabling the Intel graphics performance analyzers	Enabled	Enables this function
		Disabled	Disables this function
Primary IGFX boot display	Option for defining the primary enabled display device during booting.	VBIOS default	Uses the default setting from IGFX BIOS
		CRT	Uses the CRT (cathode ray tube) channel
		LFP	Uses the LFP (local flat panel) channel
		EFP	Uses the EFP (external flat panel) channel

Table 181: Advanced - Graphics configuration options

BIOS setting	Function	Configuration options	Effect
	Information: **The numbering of EFP occurs dynamically depending on the DisplayPort interface (B/C/D).**	EFP2	Uses the EFP2 (external flat panel 2) channel
		EFP3	Uses the EFP3 (external flat panel 3) channel
Secondary IGFX boot display	Option for defining the secondary enabled panel during POST **Information:** **The numbering of EFP occurs dynamically depending on the DisplayPort interface (B/C/D).** **Information:** **After the BIOS boot screen, nothing more is shown on this display until the graphics driver is reloaded by the operating system.**	Disabled	Disables this function. Only shows POST on one display.
		CRT	Uses the CRT (cathode ray tube) channel
		LFP	Uses the LFP (local flat panel) channel
		EFP	Uses the EFP (external flat panel) channel
		EFP2	Uses the EFP2 (external flat panel 2) channel
		EFP3	Uses the EFP3 (external flat panel 3) channel
Active LFP configuration	Option for selecting the active LFP (local flat panel) channel **Information:** **This option has no effect on the Automation PC 910.**	No local flat panel	Does not use the LVDS channel
		Integrated LVDS	Uses the integrated LVDS channel
Display port B interface	Option for selecting the display device that is connected to the DisplayPort interface	Disabled	Disables the DisplayPort interface
		DisplayPort	Configures the DisplayPort interface as a DisplayPort interface
		HDMI/DVI	Configures the DisplayPort interface as an HDMI/DVI interface
Display Port C interface	Option for selecting the display device that is connected to the monitor/panel option	Disabled	Disables the monitor/panel option
		DisplayPort	Configures the monitor/panel option as a DisplayPort interface
		HDMI/DVI	Configures the monitor/panel option as an HDMI/DVI interface
Display Port D interface	Option for selecting the display device that is connected to the monitor/panel interface	Disabled	Disables the monitor/panel interface
		DisplayPort	Configures the monitor/panel interface as a DisplayPort interface **Information:** **The monitor/panel interface can no longer be used when this setting is selected. This setting is not permitted for the monitor/panel interface!**
		HDMI/DVI	Configures the monitor/panel interface as an HDMI/DVI interface
Display mode persistence	Display mode persistence means that the operating system remembers and can restore previous display connection configurations. For example, a dual DVI configuration is automatically restored when both DVI monitors are reconnected, even if only one of them was connected and enabled during a previous boot.	Disabled	Disables this function
		Enabled	Enables this function

Table 181: Advanced - Graphics configuration options

1.4.2 Hardware health monitoring

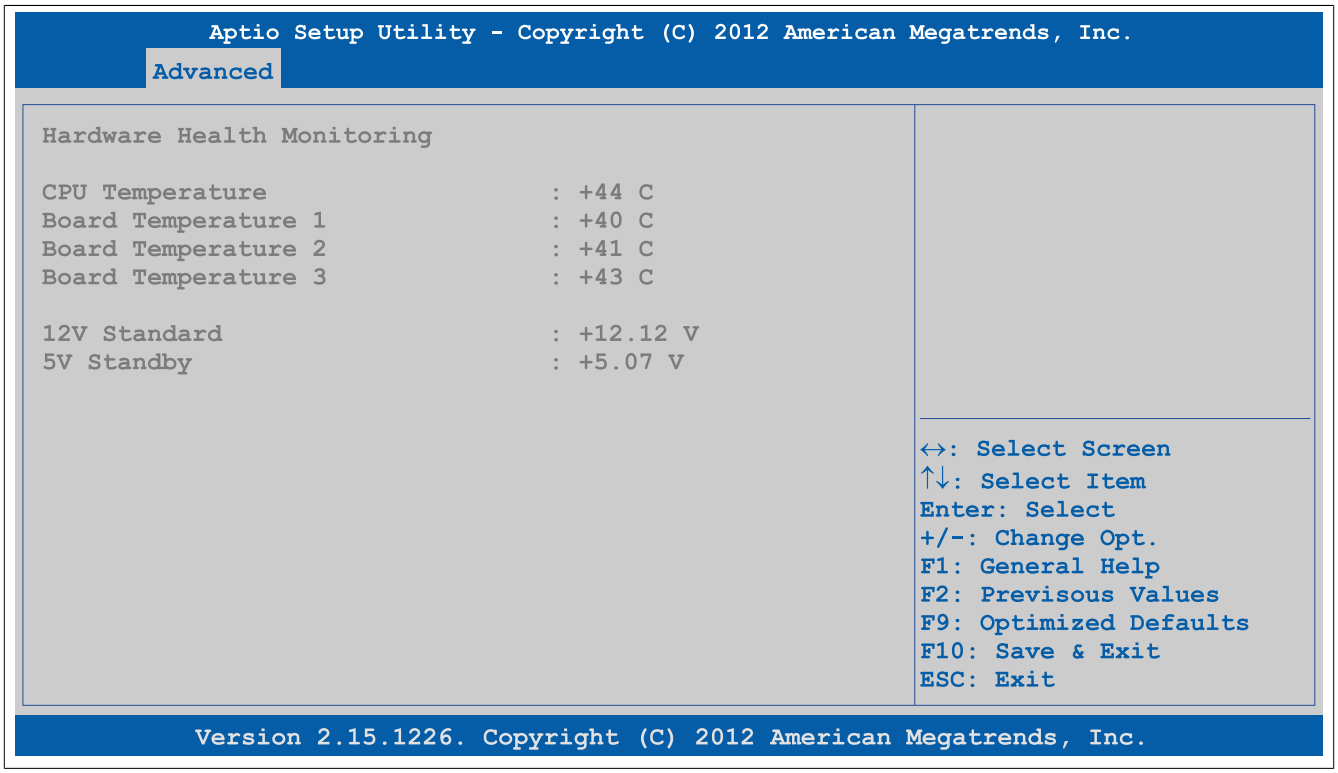

Figure 102: Advanced - Hardware Health Monitoring

BIOS setting	Function	Configuration options	Effect
CPU temperature	Displays the current temperature of the CPU sensor in °C	None	-
Board temperature 1	Displays the current temperature of board sensor 1 in °C	None	-
Board temperature 2	Displays the current temperature of board sensor 2 in °C	None	-
Board temperature 3	Displays the current temperature of board sensor 3 in °C	None	-
12 V (default)	Displays the current voltage of the 12 volt supply	None	-
5 V standby	Displays the current voltage of the 5 volt supply	None	-

Table 182: Advanced - Hardware health monitoring

1.4.3 OEM features

```
Aptio Setup Utility - Copyright (C) 2012 American Megatrends, Inc.
Advanced

Versions                                          Change some settings
Main BIOS Version                APC9R123         important for RT.
OEM BIOS Version
MTCX                             1.14

ETH2 MAC Address                 00:60:65:1B:76:9D

OEM String
Bernecker + Rainer Industrie-Elektronik Q1.23

Realtime Environment             [Disabled]
POST Watchdog                    [Disabled]        ↔: Select Screen
                                                   ↑↓: Select Item
▶ Super I/O Configuration                          Enter: Select
▶ CPU Board Features                               +/-: Change Opt.
▶ System Board Features                            F1: General Help
▶ Memory Module Features                           F2: Previsous Values
▶ Bus Unit Features                                F9: Optimized Defaults
▶ IF Option 1 Features                             F10: Save & Exit
▶ IF Option 2 Features                             ESC: Exit
▶ Display Link Module Features
▶ Fan Unit Features
▶ Slide-in Features 1
▶ Slide-in Features 2
▶ Panel Control Features

Version 2.15.1226. Copyright (C) 2012 American Megatrends, Inc.
```

Figure 103: Advanced - OEM Features

BIOS setting	Function	Configuration options	Effect
Main BIOS version	Displays the installed B&R BIOS version	None	-
OEM BIOS version		None	-
MTCX	Displays the installed MTCX version	None	-
ETH2 MAC address	Displays the assigned MAC address for the ETH2 interface	None	-
Realtime environment	Configures settings for real-time operating systems such as ARwin	Disabled	Disables this function
		Enabled	Disables hyper-threading, turbo mode and EIST. Also disables ASPM and the IRQ of root ports 2 and 3.
POST watchdog	Option for configuring the POST watchdog. This starts at the beginning of POST and stops at the end of POST.	Disabled	Disables this option
		30 sec	Delay time until the POST watchdog is active
		1 min	
		2 min	
		5 min	
		10 min	
		30 min	
Super I/O configuration	Configures special interface settings	Enter	Opens this submenu See "Super I/O configuration" on page 222.
CPU board features	Displays device-specific information for the CPU board	Enter	Opens this submenu See "CPU board features" on page 223.
System board features	Displays device-specific information for the system unit	Enter	Opens this submenu See "System board features" on page 225.
Memory module features	Displays device-specific information for the main memory	Enter	Opens this submenu See "Memory module features" on page 228.
Bus unit features	Displays device-specific information for the bus unit	Enter	Opens this submenu See "Bus unit features" on page 229.
IF option 1 features[1)]	Displays device-specific information for interface option 1	Enter	Opens this submenu See "IF option 1 features" on page 230.
IF option 2 features[1)]	Displays device-specific information for interface option 2	Enter	Opens this submenu See "IF option 2 features" on page 232.
Display link module features[1)]	Displays device-specific information for the monitor/panel option	Enter	Opens this submenu See "Display link module features" on page 233.

Table 183: Advanced - OEM features screen

BIOS setting	Function	Configuration options	Effect
Fan unit features[2]	Displays device-specific information for the fan kit	Enter	Opens this submenu See "Fan unit features" on page 235.
Slide-in features 1[3]	Displays device-specific information for slide-in drive 1	Enter	Opens this submenu See "Slide-in 1 features" on page 237.
Slide-in features 2[3]	Displays device-specific information for slide-in drive 2	Enter	Opens this submenu See "Slide-in 2 features" on page 239.
Panel control features	Displays device-specific information for the connected panel	Enter	Opens this submenu See "Panel control features" on page 240.

Table 183: Advanced - OEM features screen

1) This option is only shown if the corresponding option is installed in the system unit.
2) This option is only shown if a fan kit is installed in the system unit.
3) This option is only shown if a slide-in drive is installed in the system unit.

1.4.3.1 Super I/O configuration

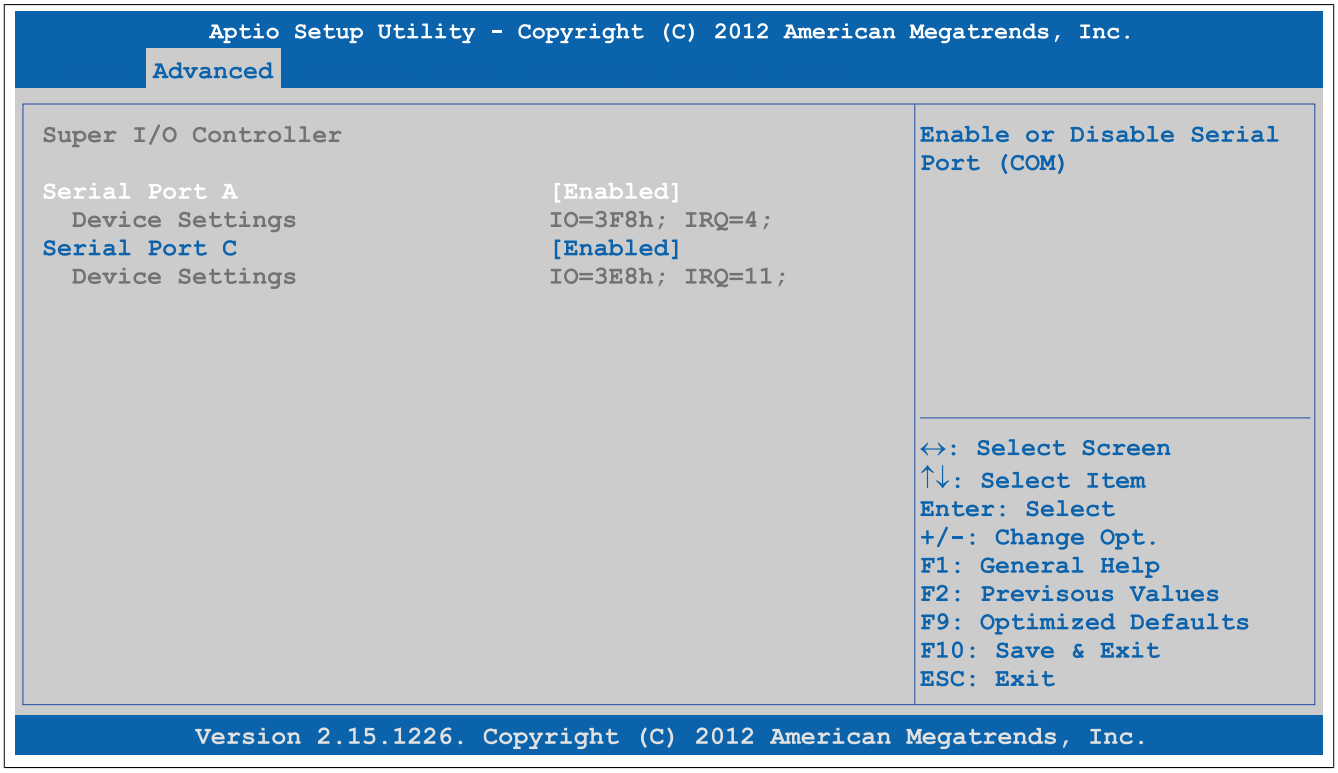

Figure 104: Advanced - OEM Features - Super I/O Configuration

BIOS setting	Function	Configuration options	Effect
Serial port A	Settings for the COM1 serial interface	Enabled	Enables this interface
		Disabled	Disables this interface
Device settings	Displays the I/O address and interrupt of the COM1 interface	None	-
Serial port B[1]	Setting for the monitor/panel option	Enabled	Enables this interface
		Disabled	Disables this interface
Device settings	Displays the I/O address and interrupt for the monitor/panel option	None	-
Serial port C	Setting for the monitor/panel interface	Enabled	Enables this interface
		Disabled	Disables this interface
Device settings	Displays the I/O address and interrupt for the monitor/panel interface	None	-
Serial port E[1]	Setting for the RS232 IF option in IF option slot 1	Enabled	Enables this interface
		Disabled	Disables this interface
Device settings	Displays the I/O address and interrupt for the RS232 IF option in IF option slot 1	None	-
Serial port F[1]	Setting for the RS232 IF option in IF option slot 2	Enabled	Enables this interface
		Disabled	Disables this interface
Device settings	Displays the I/O address and interrupt for the RS232 IF option in IF option slot 2	None	-
CAN controller[1]	Setting for the CAN IF option	Enabled	Enables this interface
		Disabled	Disables this interface
Device settings	Displays the I/O address and interrupt for the CAN IF option	None	-

Table 184: Advanced - OEM features - Super I/O configuration - Configuration options

1) This option is only shown if the corresponding option is installed in the system unit.

1.4.3.2 CPU board features

```
Aptio Setup Utility - Copyright (C) 2012 American Megatrends, Inc.
Advanced

CPU Board Features                                  Temperature Values Submenu

Device ID                          0000D6FB
Hardware Revision                  A0
Product Name                       5PC900.TS77-03
▶ Temperature Values

                                                    ↔: Select Screen
                                                    ↑↓: Select Item
                                                    Enter: Select
                                                    +/-: Change Opt.
                                                    F1: General Help
                                                    F2: Previsous Values
                                                    F9: Optimized Defaults
                                                    F10: Save & Exit
                                                    ESC: Exit

Version 2.15.1226. Copyright (C) 2012 American Megatrends, Inc.
```

Figure 105: Advanced - OEM Features - CPU Board Features

BIOS setting	Function	Configuration options	Effect
Device ID	Displays the device ID of the CPU board	None	-
Hardware revision	Displays the hardware revision of the CPU board	None	-
Product name	Displays the B&R model number	None	-
Temperature values	Displays current temperature values	Enter	Opens this submenu See "Temperature values" on page 224.

Table 185: Advanced - OEM features - CPU board features

1.4.3.2.1 Temperature values

```
Aptio Setup Utility - Copyright (C) 2012 American Megatrends, Inc.
Advanced

Temperature Values

Live Temperature Values
  Sensor 1                    39 C / 102 F
  Sensor 2                    40 C / 104 F
  Sensor 3                    41 C / 105 F
  Sensor 4                    40 C / 104 F

                              ↔: Select Screen
                              ↑↓: Select Item
                              Enter: Select
                              +/-: Change Opt.
                              F1: General Help
                              F2: Previsous Values
                              F9: Optimized Defaults
                              F10: Save & Exit
                              ESC: Exit

Version 2.15.1226. Copyright (C) 2012 American Megatrends, Inc.
```

Figure 106: Advanced - OEM Features - CPU Board Features - Temperature Values

BIOS setting	Function	Configuration options	Effect
Sensor 1	Displays the current temperature of sensor 1 (board controller) in °C and °F	None	-
Sensor 2	Displays the current temperature of sensor 2 (CPU) in °C and °F	None	-
Sensor 3	Displays the current temperature of sensor 3 (SO-DIMM 1) in °C and °F[1)]	None	-
Sensor 4	Displays the current temperature of sensor 4 (SO-DIMM 2) in °C and °F[1)]	None	-

Table 186: Advanced - OEM features - CPU board features - Temperature values

1) A valid temperature is only provided if the module is connected and equipped with a temperature sensor. Otherwise, the value 0 is output in the ADI Control Center and BIOS; an alarm is also output in the ADI Control Center.

1.4.3.3 System board features

```
Aptio Setup Utility - Copyright (C) 2012 American Megatrends, Inc.
Advanced

System Board Features                                  Statistical Values Submenu

Device ID                          0000D6DB
Compatibility ID                   0000
Vendor ID                          00000000
Hardware Revision                  A0
Serial Number                      D6DB0100000
Product Name                       5PC910.SX02-00
Parent Device ID                   FFFFFFFF
Parent Compatibility ID            FFFF
User Serial ID                     Not defined

> Statistical Values                                  ↔: Select Screen
▶ Temperature Values                                   ↑↓: Select Item
▶ Voltage Values                                       Enter: Select
                                                       +/-: Change Opt.
                                                       F1: General Help
                                                       F2: Previsous Values
                                                       F9: Optimized Defaults
                                                       F10: Save & Exit
                                                       ESC: Exit

Version 2.15.1226. Copyright (C) 2012 American Megatrends, Inc.
```

Figure 107: Advanced - OEM Features - System Board Features

BIOS setting	Function	Configuration options	Effect
Device ID	Displays the device ID of the system board	None	-
Compatibility ID	Displays the version of the device within the same B&R device ID. This ID is needed for Automation Runtime.	None	-
Vendor ID	Displays the vendor ID	None	-
Hardware revision	Displays the hardware revision of the system board	None	-
Serial number	Displays the B&R serial number	None	-
Product name	Displays the B&R model number	None	-
Parent device ID	Displays the manufacturer number	None	-
Parent compatibility ID	Displays the manufacturer ID	None	-
User serial ID	Displays the user serial ID. This 8-digit hexadecimal value can be freely specified by the user (e.g. to give the device a unique ID) and can only be changed using the "B&R Control Center" included with the ADI driver.	None	-
Statistical values	Displays statistical values	Enter	Opens this submenu See "Statistical values" on page 226.
Temperature values	Displays current temperature values	Enter	Opens this submenu See "Temperature values" on page 226.
Voltage control	Displays current battery properties	Enter	Opens this submenu See "Voltage values" on page 227.

Table 187: Advanced - OEM features - System board features

1.4.3.3.1 Statistical values

```
Aptio Setup Utility - Copyright (C) 2012 American Megatrends, Inc.
Advanced

Statistical Values

Operating Time
 Total Hours                    1200
 Power On Cycles                32208

                                ↔: Select Screen
                                ↑↓: Select Item
                                Enter: Select
                                +/-: Change Opt.
                                F1: General Help
                                F2: Previsous Values
                                F9: Optimized Defaults
                                F10: Save & Exit
                                ESC: Exit

Version 2.15.1226. Copyright (C) 2012 American Megatrends, Inc.
```

Figure 108: Advanced - OEM Features - System Board Features - Statistical Values

BIOS setting	Function	Configuration options	Effect
Total hours	Displays the runtime in hours	None	-
Power on cycles	Displays the number of power-on cycles. Each restart increases the counter by one.	None	-

Table 188: Advanced - OEM features - System board features - Statistical values

1.4.3.3.2 Temperature values

```
Aptio Setup Utility - Copyright (C) 2012 American Megatrends, Inc.
Advanced

Temperature Values

Live Temperature Values
 Sensor 1                       35 C / 95 F
 Sensor 2                       34 C / 93 F
 Sensor 3                       35 C / 95 F

                                ↔: Select Screen
                                ↑↓: Select Item
                                Enter: Select
                                +/-: Change Opt.
                                F1: General Help
                                F2: Previsous Values
                                F9: Optimized Defaults
                                F10: Save & Exit
                                ESC: Exit

Version 2.15.1226. Copyright (C) 2012 American Megatrends, Inc.
```

Figure 109: Advanced - OEM Features - System Board Features - Temperature Values

BIOS setting	Function	Configuration options	Effect
Sensor 1	Displays the current temperature of sensor 1 (board power supply) in °C and °F	None	-
Sensor 2	Displays the current temperature of sensor 2 (near slide-in compact slot) in °C and °F	None	-
Sensor 3	Displays the current temperature of sensor 3 (near main memory) in °C and °F	None	-

Table 189: Advanced - OEM features - System board features - Temperature values

1.4.3.3.3 Voltage values

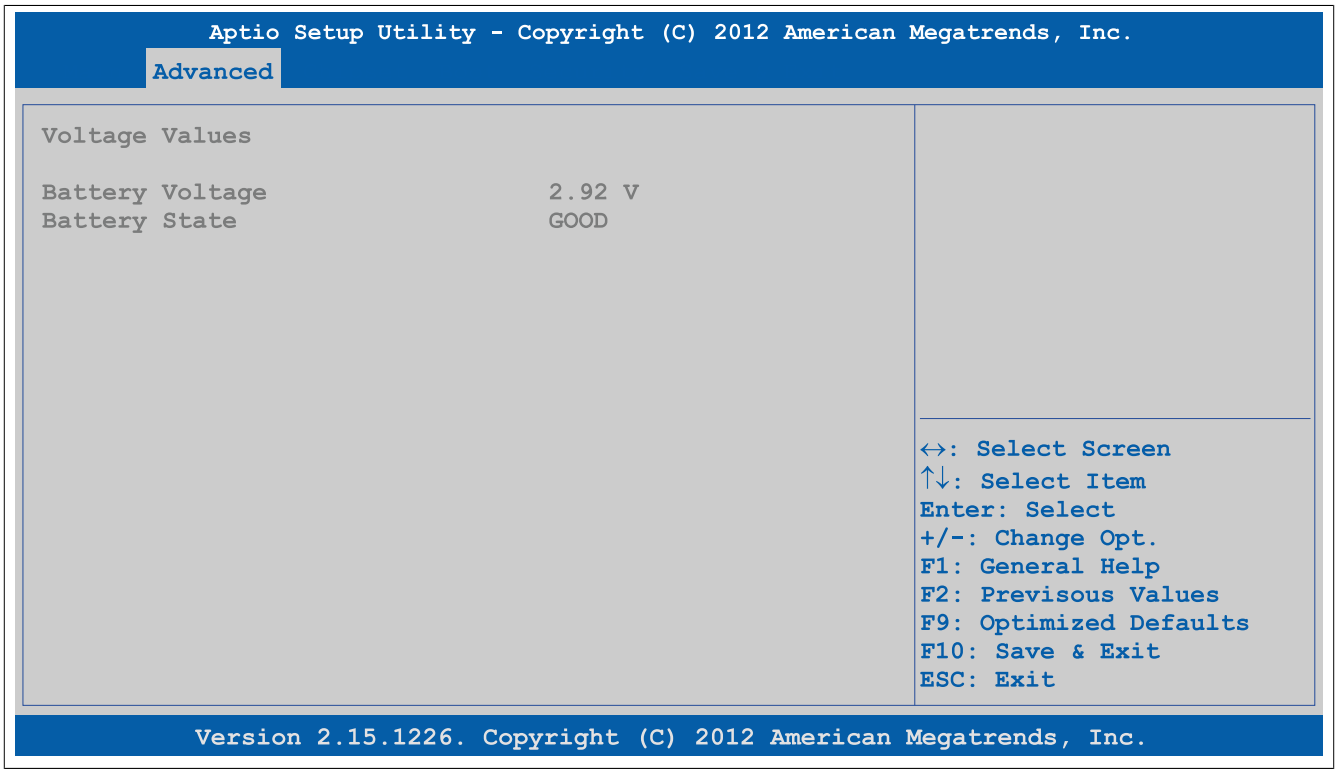

Figure 110: Advanced - OEM Features - System Board Features - Voltage Values

BIOS setting	Function	Configuration options	Effect
Battery voltage	Displays the battery voltage in volts	None	-
Battery state	Displays the status of the battery	None	-

Table 190: Advanced - OEM features - System board features - Voltage values

1.4.3.4 Memory module features

```
Aptio Setup Utility - Copyright (C) 2012 American Megatrends, Inc.
Advanced

Memory Module Features

Socket 1 Module:
Device ID                          0000D6E3
Compatibility ID                   0000
Vendor ID                          00000000
Hardware Revision                  C0
Serial Number                      D6E30168966
Product Name                       5MMDDR.8192-03
Parent Device ID                   FFFFFFFF
Parent Compatibility ID            FFFF

Socket 2 Module:
Device ID                          0000D6E3
Compatibility ID                   0000
Vendor ID                          00000000
Hardware Revision                  C0
Serial Number                      D6E30168971
Product Name                       5MMDDR.8192-03
Parent Device ID                   FFFFFFFF
Parent Compatibility ID            FFFF

↔: Select Screen
↑↓: Select Item
Enter: Select
+/-: Change Opt.
F1: General Help
F2: Previsous Values
F9: Optimized Defaults
F10: Save & Exit
ESC: Exit

Version 2.15.1226. Copyright (C) 2012 American Megatrends, Inc.
```

Figure 111: Advanced - OEM Features - Memory Module Features

BIOS setting	Function	Configuration options	Effect
Socket 1 module			
Device ID	Displays the device ID of the memory module	None	-
Compatibility ID	Displays the version of the device within the same B&R device ID. This ID is needed for Automation Runtime.	None	-
Vendor ID	Displays the vendor ID	None	-
Hardware revision	Displays the hardware revision of the memory module	None	-
Serial number	Displays the B&R serial number	None	-
Product name	Displays the B&R model number	None	-
Parent device ID	Displays the manufacturer number	None	-
Parent compatibility ID	Displays the manufacturer ID	None	-
Socket 2 module			
Device ID	Displays the device ID of the memory module	None	-
Compatibility ID	Displays the version of the device within the same B&R device ID. This ID is needed for Automation Runtime.	None	-
Vendor ID	Displays the vendor ID	None	-
Hardware revision	Displays the hardware revision of the memory module	None	-
Serial number	Displays the B&R serial number	None	-
Product name	Displays the B&R model number	None	-
Parent device ID	Displays the manufacturer number	None	-
Parent compatibility ID	Displays the manufacturer ID	None	-

Table 191: Advanced - OEM features - Memory module features

1.4.3.5 Bus unit features

```
Aptio Setup Utility - Copyright (C) 2012 American Megatrends, Inc.
Advanced

Bus Unit Features                                   Statistical Values Submenu

Device ID                          0000D6DF
Compatibility ID                   0000
Vendor ID                          00000000
Hardware Revision                  A0
Serial Number                      D6DF0168425
Product Name                       5PC901.BX02-01
Parent Device ID                   FFFFFFFF
Parent Compatibility ID            FFFF

> Statistical Values                                ↔: Select Screen
                                                    ↑↓: Select Item
                                                    Enter: Select
                                                    +/-: Change Opt.
                                                    F1: General Help
                                                    F2: Previsous Values
                                                    F9: Optimized Defaults
                                                    F10: Save & Exit
                                                    ESC: Exit

Version 2.15.1226. Copyright (C) 2012 American Megatrends, Inc.
```

Figure 112: Advanced - OEM Features - Bus Unit Features

BIOS setting	Function	Configuration options	Effect
Device ID	Displays the device ID of the bus unit	None	-
Compatibility ID	Displays the version of the device within the same B&R device ID. This ID is needed for Automation Runtime.	None	-
Vendor ID	Displays the vendor ID	None	-
Hardware revision	Displays the hardware revision of the bus unit	None	-
Serial number	Displays the B&R serial number	None	-
Product name	Displays the B&R model number	None	-
Parent device ID	Displays the manufacturer number	None	-
Parent compatibility ID	Displays the manufacturer ID	None	-
Statistical values	Displays statistical values	Enter	Opens this submenu See "Statistical values" on page 230.

Table 192: Advanced - OEM features - Bus unit features

1.4.3.5.1 Statistical values

```
Aptio Setup Utility - Copyright (C) 2012 American Megatrends, Inc.
Advanced

Statistical Values

Operating Time
 Total Hours                    80
 Power On Cycles                12

                                  ↔: Select Screen
                                  ↑↓: Select Item
                                  Enter: Select
                                  +/-: Change Opt.
                                  F1: General Help
                                  F2: Previsous Values
                                  F9: Optimized Defaults
                                  F10: Save & Exit
                                  ESC: Exit

Version 2.15.1226. Copyright (C) 2012 American Megatrends, Inc.
```

Figure 113: Advanced - OEM Features - Bus Unit Features - Statistical Values

BIOS setting	Function	Configuration options	Effect
Total hours	Displays the runtime in hours	None	-
Power on cycles	Displays the number of power-on cycles. Each restart increases the counter by one.	None	-

Table 193: Advanced - OEM features - Bus unit features - Statistical values

1.4.3.6 IF option 1 features

```
Aptio Setup Utility - Copyright (C) 2012 American Megatrends, Inc.
Advanced

IF Option 1 Features                          Statistical Values Submenu

Device ID                       0000D6DF
Compatibility ID                0000
Vendor ID                       00000000
Hardware Revision               A0
Serial Number                   D6DF0168425
Product Name                    5AC901.I485-00
Parent Device ID                FFFFFFFF
Parent Compatibility ID         FFFF

> Statistical Values                          ↔: Select Screen
                                              ↑↓: Select Item
                                              Enter: Select
                                              +/-: Change Opt.
                                              F1: General Help
                                              F2: Previsous Values
                                              F9: Optimized Defaults
                                              F10: Save & Exit
                                              ESC: Exit

Version 2.15.1226. Copyright (C) 2012 American Megatrends, Inc.
```

Figure 114: Advanced - OEM features - IF option 1 features

BIOS setting	Function	Configuration options	Effect
Device ID	Displays the device ID of IF option 1	None	-
Compatibility ID	Displays the version of the device within the same B&R device ID. This ID is needed for Automation Runtime.	None	-
Vendor ID	Displays the vendor ID	None	-
Hardware revision	Displays the hardware revision of IF option 1	None	-
Serial number	Displays the B&R serial number	None	-
Product name	Displays the B&R model number	None	-
Parent device ID	Displays the manufacturer number	None	-
Parent compatibility ID	Displays the manufacturer ID	None	-
Statistical values	Displays statistical values	Enter	Opens this submenu See "Statistical values" on page 231.

Table 194: Advanced - OEM features - IF option 1 features

1.4.3.6.1 Statistical values

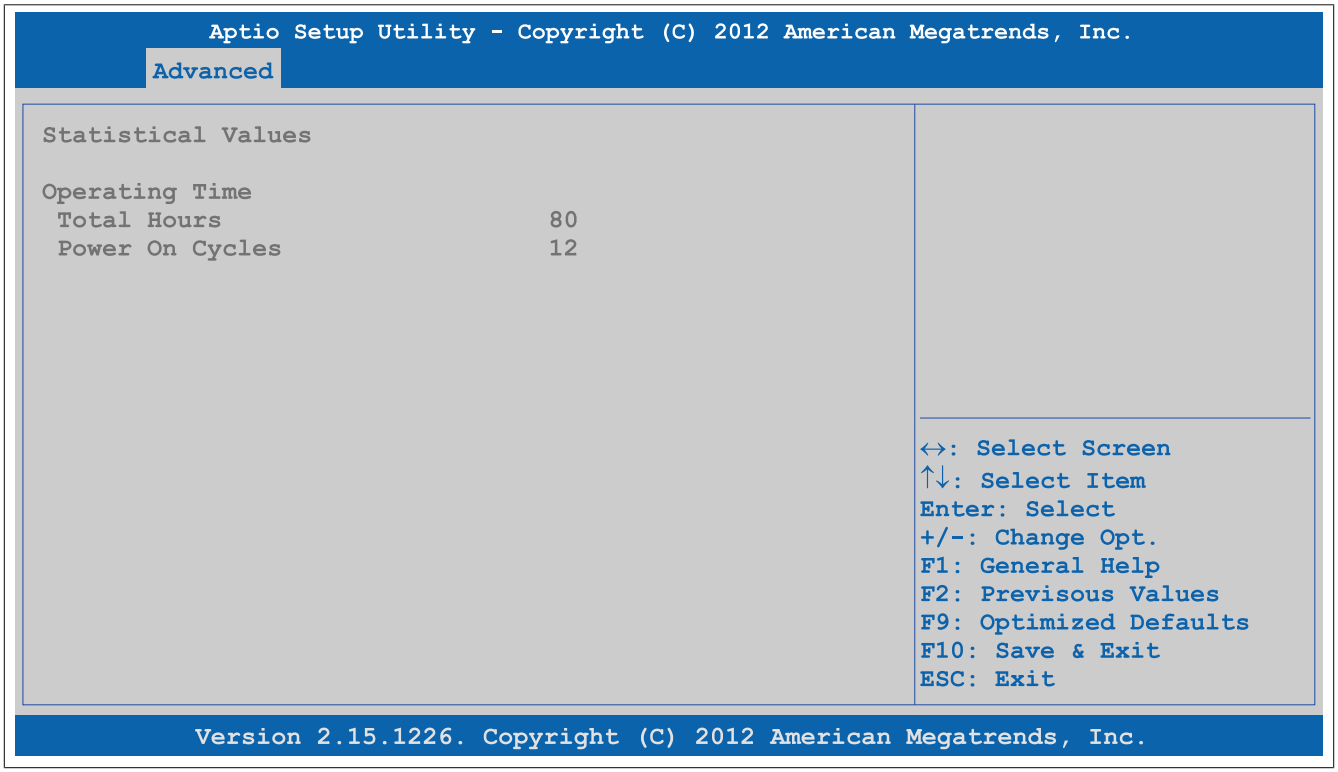

Figure 115: Advanced - OEM features - IF option 1 features - Statistical values

BIOS setting	Function	Configuration options	Effect
Total hours	Displays the runtime in hours	None	-
Power on cycles	Displays the number of power-on cycles. Each restart increases the counter by one.	None	-

Table 195: Advanced - OEM features - IF option 1 features - Statistical values

1.4.3.7 IF option 2 features

```
Aptio Setup Utility - Copyright (C) 2012 American Megatrends, Inc.
Advanced

IF Option 2 Features                                  Statistical Values Submenu

Device ID 0000D6DF
Compatibility ID 000  0
Vendor ID 00000000
Hardware Revision A0
Serial Number D6DF0168425
Product Name 5AC901.ICAN-00
Parent Device ID FFFFFFFF
Parent Compatibility ID FFFF

> Statistical Values                                  : Select Screen
                                                      : Select Item
                                                      Enter: Select
                                                      +/-: Change Opt.
                                                      F1: General Help
                                                      F2: Previsous Values
                                                      F9: Optimized Defaults
                                                      F10: Save & Exit
                                                      ESC: Exit

Version 2.15.1226. Copyright (C) 2012 American Megatrends, Inc.
```

Figure 116: Advanced - OEM features - IF option 2 features

BIOS setting	Function	Configuration options	Effect
Device ID	Displays the device ID of IF option 2	None	-
Compatibility ID	Displays the version of the device within the same B&R device ID. This ID is needed for Automation Runtime.	None	-
Vendor ID	Displays the vendor ID	None	-
Hardware revision	Displays the hardware revision of IF option 2	None	-
Serial number	Displays the B&R serial number	None	-
Product name	Displays the B&R model number	None	-
Parent device ID	Displays the manufacturer number	None	-
Parent compatibility ID	Displays the manufacturer ID	None	-
Statistical values	Displays statistical values	Enter	Opens this submenu See "Statistical values" on page 233.

Table 196: Advanced - OEM features - IF option 2 features

1.4.3.7.1 Statistical values

```
Aptio Setup Utility - Copyright (C) 2012 American Megatrends, Inc.
Advanced

Statistical Values

Operating Time
 Total Hours                    80
 Power On Cycles                12

                                ↔: Select Screen
                                ↑↓: Select Item
                                Enter: Select
                                +/-: Change Opt.
                                F1: General Help
                                F2: Previsous Values
                                F9: Optimized Defaults
                                F10: Save & Exit
                                ESC: Exit

Version 2.15.1226. Copyright (C) 2012 American Megatrends, Inc.
```

Figure 117: Advanced - OEM features - IF option 2 features - Statistical values

BIOS setting	Function	Configuration options	Effect
Total hours	Displays the runtime in hours	None	-
Power on cycles	Displays the number of power-on cycles. Each restart increases the counter by one.	None	-

Table 197: Advanced - OEM features - IF option 2 features - Statistical values

1.4.3.8 Display link module features

```
Aptio Setup Utility - Copyright (C) 2012 American Megatrends, Inc.
Advanced

Display Link Module Features                Statistical Values Submenu

Device ID                       0000D6DF
Compatibility ID                0000
Vendor ID                       00000000
Hardware Revision               A0
Serial Number                   D6DF0168425
Product Name                    5AC901.LDPO-00
Parent Device ID                FFFFFFFF
Parent Compatibility ID         FFFF

▶ Statistical Values            ↔: Select Screen
▶ Temperature Values            ↑↓: Select Item
                                Enter: Select
                                +/-: Change Opt.
                                F1: General Help
                                F2: Previsous Values
                                F9: Optimized Defaults
                                F10: Save & Exit
                                ESC: Exit

Version 2.15.1226. Copyright (C) 2012 American Megatrends, Inc.
```

Figure 118: Advanced - OEM features - Display link module features

BIOS setting	Function	Configuration options	Effect
Device ID	Displays the device ID of the monitor/panel option	None	-
Compatibility ID	Displays the version of the device within the same B&R device ID. This ID is needed for Automation Runtime.	None	-
Vendor ID	Displays the vendor ID	None	-
Hardware revision	Displays the hardware revision of the monitor/panel option	None	-
Serial number	Displays the B&R serial number	None	-
Product name	Displays the B&R model number	None	-
Parent device ID	Displays the manufacturer number	None	-
Parent compatibility ID	Displays the manufacturer ID	None	-
Statistical values	Displays statistical values	Enter	Opens this submenu See "Statistical values" on page 234.
Temperature values	Displays current temperature values	Enter	Opens this submenu See "Temperature values" on page 235.

Table 198: Advanced - OEM features - Display link module features

1.4.3.8.1 Statistical values

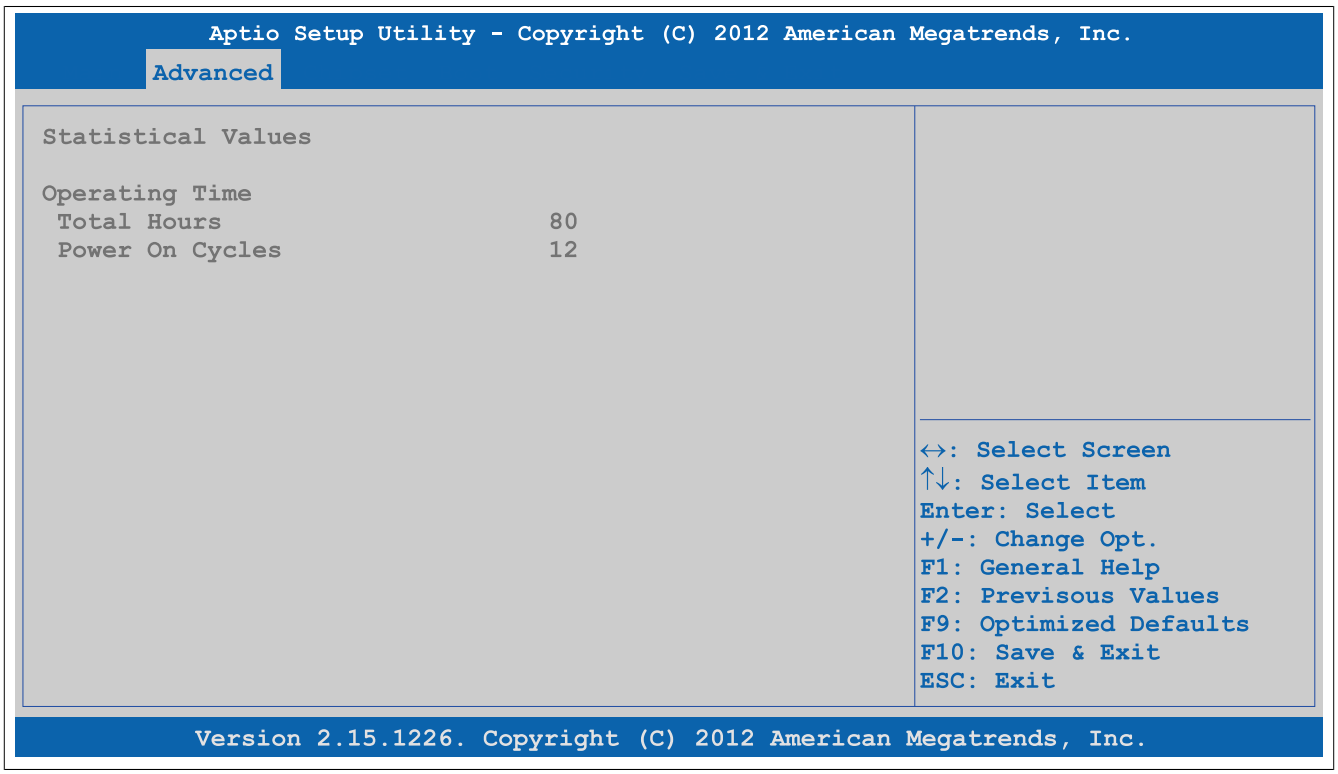

Figure 119: Advanced - OEM features - Display link module features - Statistical values

BIOS setting	Function	Configuration options	Effect
Total hours	Displays the runtime in hours	None	-
Power on cycles	Displays the number of power-on cycles. Each restart increases the counter by one.	None	-

Table 199: Advanced - OEM features - Display link module features - Statistical values

1.4.3.8.2 Temperature values

```
Aptio Setup Utility - Copyright (C) 2012 American Megatrends, Inc.
Advanced

Temperature Values

Live Temperature Values
  Sensor 1                          28 C / 85 F

                                    ↔: Select Screen
                                    ↑↓: Select Item
                                    Enter: Select
                                    +/-: Change Opt.
                                    F1: General Help
                                    F2: Previsous Values
                                    F9: Optimized Defaults
                                    F10: Save & Exit
                                    ESC: Exit

Version 2.15.1226. Copyright (C) 2012 American Megatrends, Inc.
```

Figure 120: Advanced - OEM features - Display link module features - Temperature values

BIOS setting	Function	Configuration options	Effect
Sensor 1	Displays the current temperature of sensor 1 (monitor/panel option) in °C and °F	None	-

Table 200: Advanced - OEM features - Display link module features - Temperature values

1.4.3.9 Fan unit features

```
Aptio Setup Utility - Copyright (C) 2012 American Megatrends, Inc.
Advanced

Fan Unit Features                                   Statistical Values Submenu

Device ID                          0000D6DF
Compatibility ID                   0000
Vendor ID                          00000000
Hardware Revision                  A0
Serial Number                      D6DF0168425
Product Name                       5AC910.FA01-00
Parent Device ID                   FFFFFFFF
Parent Compatibility ID            FFFF

Fan Control                        [Auto]

▶ Statistical Values                                ↔: Select Screen
▶ RPM Values                                        ↑↓: Select Item
                                                    Enter: Select
                                                    +/-: Change Opt.
                                                    F1: General Help
                                                    F2: Previsous Values
                                                    F9: Optimized Defaults
                                                    F10: Save & Exit
                                                    ESC: Exit

Version 2.15.1226. Copyright (C) 2012 American Megatrends, Inc.
```

Figure 121: Advanced - OEM features - Fan unit features

BIOS setting	Function	Configuration options	Effect
Device ID	Displays the device ID of the fan kit	None	-
Compatibility ID	Displays the version of the device within the same B&R device ID. This ID is needed for Automation Runtime.	None	-
Vendor ID	Displays the vendor ID	None	-
Hardware revision	Displays the hardware revision of the fan kit	None	-
Serial number	Displays the B&R serial number	None	-
Product name	Displays the B&R model number	None	-
Parent device ID	Displays the manufacturer number	None	-
Parent compatibility ID	Displays the manufacturer ID	None	-
Fan control	Option for setting the fan control **Information:** **It is not possible for a manual fan setting to take effect when starting back up from S3 mode. The setting "Auto" is active.**	Auto	Automatic fan control
		Minimum	Sets the minimum revolution speed. If the temperature increases, however, the fan adjusts its speed automatically to prevent critical temperatures from being exceeded.
		25%	Sets 25% of the maximum revolution speed
		50%	Sets 50% of the maximum revolution speed
		75%	Sets 75% of the maximum revolution speed
		Maximum	Sets the maximum revolution speed
Statistical values	Displays statistical values	Enter	Opens this submenu See "Statistical values" on page 236.
RPM values	Displays the speed (in rpm) of the individual fans in the fan kit	Enter	Opens this submenu See "RPM values" on page 237.

Table 201: Advanced - OEM features - Fan unit features

1.4.3.9.1 Statistical values

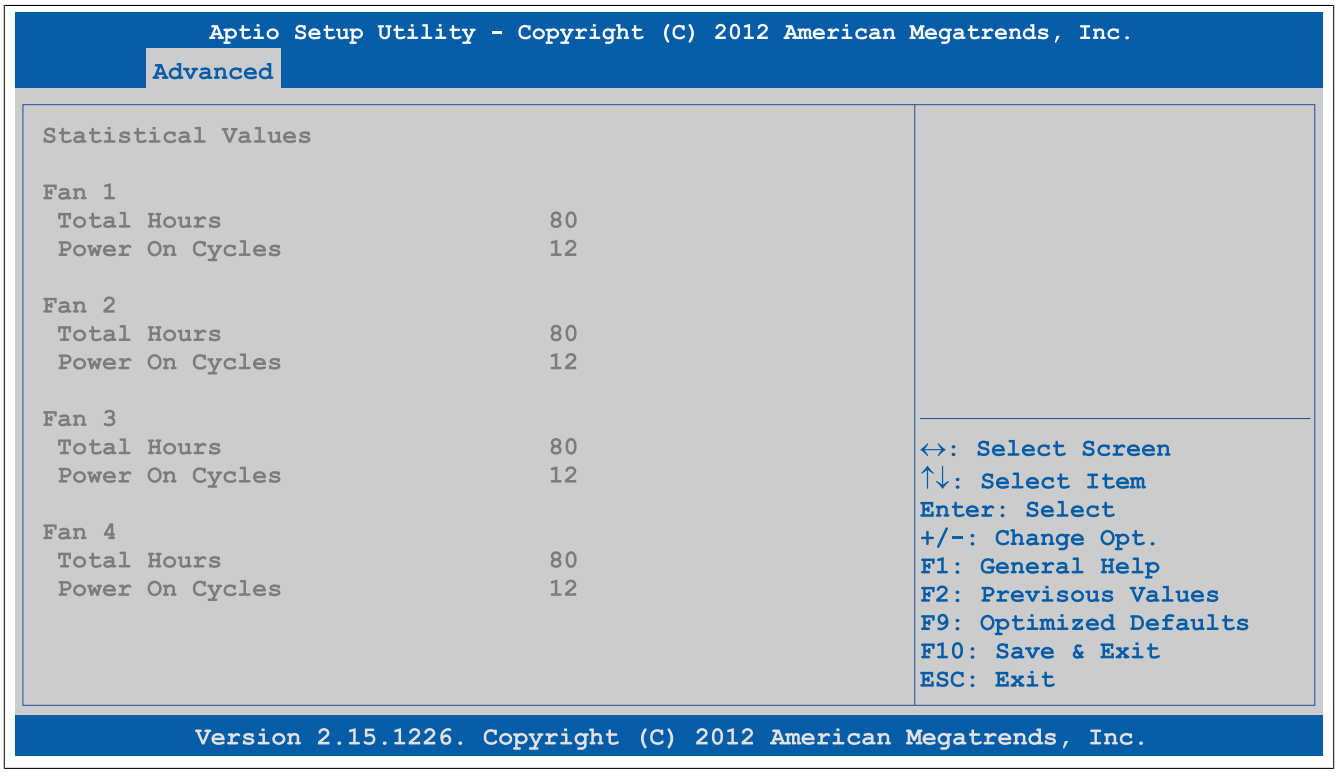

Figure 122: Advanced - OEM features - Fan unit features - Statistical values

BIOS setting	Function	Configuration options	Effect
Total hours	Displays the runtime in hours	None	-
Power on cycles	Displays the number of power-on cycles. Each restart increases the counter by one.	None	-

Table 202: Advanced - OEM features - Fan unit features - Statistical values

1.4.3.9.2 RPM values

```
Aptio Setup Utility - Copyright (C) 2012 American Megatrends, Inc.
Advanced

RPM Values

Live Fan Revolution Values
  Fan 1                          435 RPM
  Fan 2                          423 RPM
  Fan 3                          217 RPM
  Fan 4                          435 RPM

                                 ↔: Select Screen
                                 ↑↓: Select Item
                                 Enter: Select
                                 +/-: Change Opt.
                                 F1: General Help
                                 F2: Previsous Values
                                 F9: Optimized Defaults
                                 F10: Save & Exit
                                 ESC: Exit

Version 2.15.1226. Copyright (C) 2012 American Megatrends, Inc.
```

Figure 123: Advanced - OEM features - Fan unit features - RPM values

BIOS setting	Function	Configuration options	Effect
Fan 1	Displays the current speed of fan 1 in rpm	None	-
Fan 2	Displays the current speed of fan 2 in rpm	None	-
Fan 3	Displays the current speed of fan 3 in rpm	None	-
Fan 4	Displays the current speed of fan 4 in rpm	None	-

Table 203: Advanced - OEM features - Fan unit features - RPM values

1.4.3.10 Slide-in 1 features

```
Aptio Setup Utility - Copyright (C) 2012 American Megatrends, Inc.
Advanced

Slide-In 1 Features                          Temperature Values Submenu

Device ID                        0000DBFA
Compatibility ID                 0000
Vendor ID                        00000000
Hardware Revision                A0
Serial Number                    DBFA01000000
Product Name                     5AC901.SSCA-00
Parent Device ID                 FFFFFFFF
Parent Compatibility ID          FFFF

▶ Temperature Values                         ↔: Select Screen
                                             ↑↓: Select Item
                                             Enter: Select
                                             +/-: Change Opt.
                                             F1: General Help
                                             F2: Previsous Values
                                             F9: Optimized Defaults
                                             F10: Save & Exit
                                             ESC: Exit

Version 2.15.1226. Copyright (C) 2012 American Megatrends, Inc.
```

Figure 124: Advanced - OEM features - Slide-in 1 features

BIOS setting	Function	Configuration options	Effect
Device ID	Displays the device ID of the slide-in 1 drive	None	-
Compatibility ID	Displays the version of the device within the same B&R device ID. This ID is needed for Automation Runtime.	None	-
Vendor ID	Displays the vendor ID	None	-
Hardware revision	Displays the hardware revision of the slide-in drive	None	-
Serial number	Displays the B&R serial number	None	-
Product name	Displays the B&R model number	None	-
Parent device ID	Displays the manufacturer number	None	-
Parent compatibility ID	Displays the manufacturer ID	None	-
Temperature values	Displays current temperature values	Enter	Opens this submenu See "Temperature values" on page 238.

Table 204: Advanced - OEM features - Slide-in 1 features

1.4.3.10.1 Temperature values

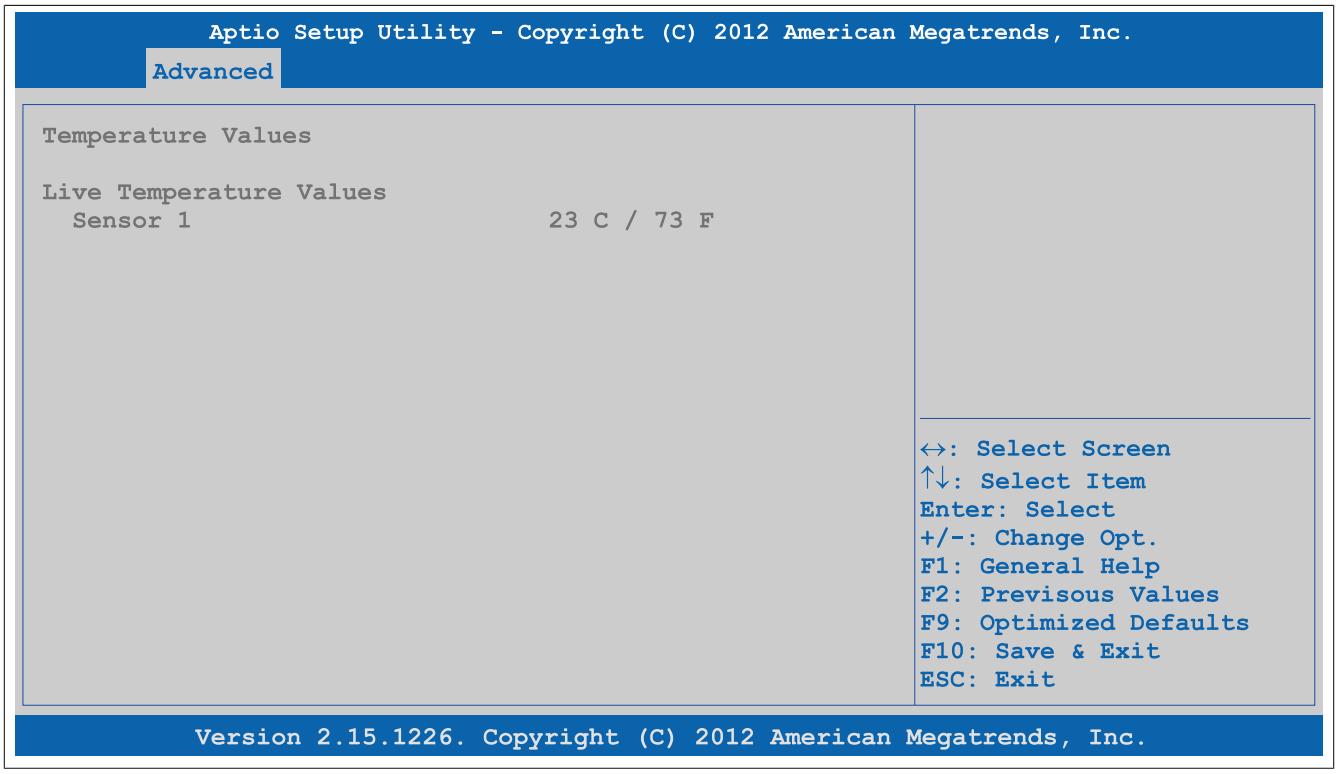

Figure 125: Advanced - OEM features - Slide-in 1 features - Temperature values

BIOS setting	Function	Configuration options	Effect
Sensor 1	Displays the current temperature of sensor 1 (slide-in 1 drive) in °C and °F	None	-

Table 205: Advanced - OEM features - Slide-in 1 features - Temperature values

1.4.3.11 Slide-in 2 features

```
Aptio Setup Utility - Copyright (C) 2012 American Megatrends, Inc.
Advanced

Slide-In 2 Features                                  Temperature Values Submenu

Device ID                          0000DBFA
Compatibility ID                   0000
Vendor ID                          00000000
Hardware Revision                  A0
Serial Number                      DBFA01000000
Product Name                       5AC901.SDVW-00
Parent Device ID                   FFFFFFFF
Parent Compatibility ID            FFFF

▶ Temperature Values                                 ↔: Select Screen
                                                     ↑↓: Select Item
                                                     Enter: Select
                                                     +/-: Change Opt.
                                                     F1: General Help
                                                     F2: Previsous Values
                                                     F9: Optimized Defaults
                                                     F10: Save & Exit
                                                     ESC: Exit

Version 2.15.1226. Copyright (C) 2012 American Megatrends, Inc.
```

Figure 126: Advanced - OEM features - Slide-in 2 features

BIOS setting	Function	Configuration options	Effect
Device ID	Displays the device ID of the slide-in 2 drive	None	-
Compatibility ID	Displays the version of the device within the same B&R device ID. This ID is needed for Automation Runtime.	None	-
Vendor ID	Displays the vendor ID	None	-
Hardware revision	Displays the hardware revision of slide-in drive 2	None	-
Serial number	Displays the B&R serial number	None	-
Product name	Displays the B&R model number	None	-
Parent device ID	Displays the manufacturer number	None	-
Parent compatibility ID	Displays the manufacturer ID	None	-
Temperature values	Displays current temperature values	Enter	Opens this submenu See "Temperature values" on page 240.

Table 206: Advanced - OEM features - Slide-in 2 features

1.4.3.11.1 Temperature values

```
Aptio Setup Utility - Copyright (C) 2012 American Megatrends, Inc.
Advanced

Temperature Values

Live Temperature Values
  Sensor 1                          23 C / 73 F

                                    ↔: Select Screen
                                    ↑↓: Select Item
                                    Enter: Select
                                    +/-: Change Opt.
                                    F1: General Help
                                    F2: Previsous Values
                                    F9: Optimized Defaults
                                    F10: Save & Exit
                                    ESC: Exit

Version 2.15.1226. Copyright (C) 2012 American Megatrends, Inc.
```

Figure 127: Advanced - OEM features - Slide-in 2 features - Temperature values

BIOS setting	Function	Configuration options	Effect
Sensor 1	Displays the current temperature of sensor 1 (slide-in 2 drive) in °C and °F	None	-

Table 207: Advanced - OEM features - Slide-in 2 features - Temperature values

1.4.3.12 Panel control features

```
Aptio Setup Utility - Copyright (C) 2012 American Megatrends, Inc.
Advanced

Panel Control Features                  Panel Control Features
                                        Submenu
▶ Panel #0

                                        ↔: Select Screen
                                        ↑↓: Select Item
                                        Enter: Select
                                        +/-: Change Opt.
                                        F1: General Help
                                        F2: Previsous Values
                                        F9: Optimized Defaults
                                        F10: Save & Exit
                                        ESC: Exit

Version 2.15.1226. Copyright (C) 2012 American Megatrends, Inc.
```

Figure 128: Advanced - OEM Features - Panel Control Features

BIOS setting	Function	Configuration options	Effect
Panel #X	Displays the panel properties of the connected panel	Enter	Opens this submenu See "Panel #X" on page 241.

Table 208: Advanced - OEM features - Panel control features

1.4.3.12.1 Panel #X

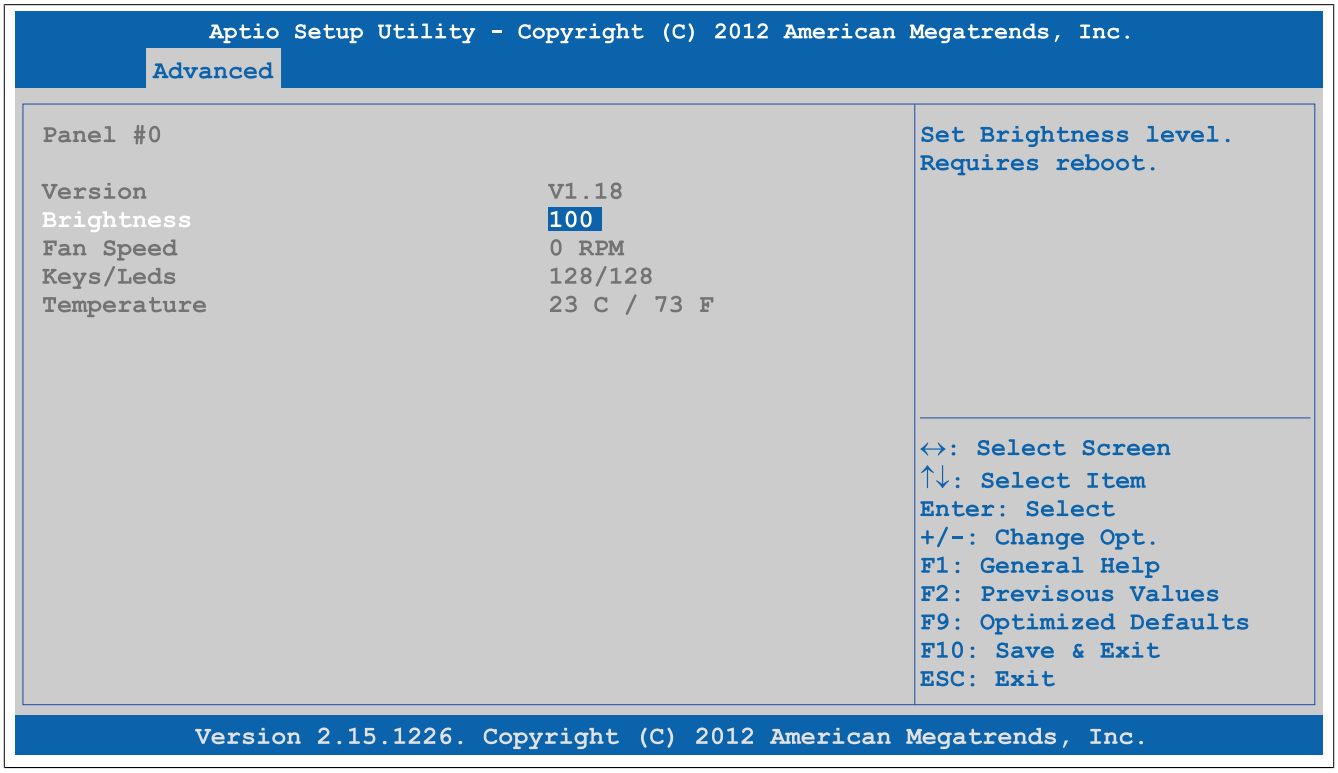

Figure 129: Advanced - OEM Features - Panel Control Features - Panel #x

BIOS setting	Function	Configuration options	Effect
Version	Displays the firmware version of the SDLR controller	None	-
Brightness	Setting for the brightness of the panel	0 to 100	Sets the brightness (in %) of the selected panel. Settings take effect immediately.
Fan speed	Displays the fan speed of the panel	None	-
Keys/LEDs	Displays the available keys and LEDs for the panel	None	-
Temperature	Displays the temperature of the panel in °C and °F	None	-

Table 209: Advanced - OEM features - Panel control features - Panel #X

1.4.4 PCI configuration

```
Aptio Setup Utility - Copyright (C) 2012 American Megatrends, Inc.
Advanced

PCI 64bit Resources Handling                    Enables or Disables 64bit
Above 4G Decoding                [Disabled]     capable Devices to be
                                                Decoded in Above 4G
PCI Common Settings                             Address Space (Only if
PCI Latency Timer                [32 PCI Bus Clocks]  System Supports 64 bit PCI
VGA Palette Snoop                [Disabled]     Decoding).
PERR# Generation                 [Disabled]
SERR# Generation                 [Disabled]

PCIE POST Delay                  [Disabled]

▶ PIRQ Routing & IRQ Reservation                ↔: Select Screen
                                                ↑↓: Select Item
                                                Enter: Select
                                                +/-: Change Opt.
                                                F1: General Help
                                                F2: Previsous Values
                                                F9: Optimized Defaults
                                                F10: Save & Exit
                                                ESC: Exit

Version 2.15.1226. Copyright (C) 2012 American Megatrends, Inc.
```

Figure 130: Advanced - PCI Configuration

BIOS setting	Function	Configuration options	Effect
Above 4G decoding	Option for enabling/disabling 64-bit capable devices to decode them in the address space above 4 GB (only if the system supports 64-bit decoding)	Disabled	Disables this function
		Enabled	Enables this function
PCI latency timer	Option for controlling how long (in PCI ticks) one PCI bus card can continue to use the master after another PCI card has requested access	32 PCI bus clocks to 248 PCI bus clocks	Manually sets the value in PCI ticks
VGA palette snoop	Option for supporting graphics cards with 256 colors. This option should only be set to "Enabled" if colors are not displayed correctly.	Disabled	Disables this function
		Enabled	Enables this function
PERR# generation	Option for generating a PERR signal (parity error). This signal indicates a data parity error one cycle after *PAR*.	Disabled	Disables this function
		Enabled	Enables this function
SERR# generation	Option for generating a SERR signal (system error). This signal indicates a data error or other type of system error when executing a special cycle command.	Disabled	Disables this function
		Enabled	Enables this function
PCIE POST delay	Option for delaying PCIE bus emulation	Disabled	Disables this function
		0.1 s	0.1 s delay before the PCIE bus is scanned
		0.2 s	0.2 s delay before the PCIE bus is scanned
		0.3 s	0.3 s delay before the PCIE bus is scanned
		1 s	1 s delay before the PCIE bus is scanned
		2 s	2 s delay before the PCIE bus is scanned
		3 s	3 s delay before the PCIE bus is scanned
		4 s	4 s delay before the PCIE bus is scanned
		5 s	5 s delay before the PCIE bus is scanned
		10 s	10 s delay before the PCIE bus is scanned
PIRQ routing & IRQ reservation	Configures PIRQ routing	Enter	Opens this submenu See "PIRQ routing & IRQ reservation" on page 243.

Table 210: Advanced - PCI configuration - Configuration options

1.4.4.1 PIRQ routing & IRQ reservation

```
Aptio Setup Utility - Copyright (C) 2012 American Megatrends, Inc.
Advanced

PIRQA                                [Auto]      Set interrupt for selected
PIRQB                                [Auto]      PIRQ. Please refer to the
PIRQC                                [Auto]      board's resource list for
PIRQD                                [Auto]      a detailed list of devices
PIRQE                                [Auto]      connected to the
PIRQF                                [Auto]      respective IRQ.
PIRQG                                [Auto]      NOTE: These settings will
PIRQH                                [Auto]      only be effective while
                                                 operating in PIC (non-
Reserve Legacy Interrupt 1           [None]      IOAPCI) interrupt mode.
Reserve Legacy Interrupt 2           [None]
                                                 ↔: Select Screen
                                                 ↑↓: Select Item
                                                 Enter: Select
                                                 +/-: Change Opt.
                                                 F1: General Help
                                                 F2: Previsous Values
                                                 F9: Optimized Defaults
                                                 F10: Save & Exit
                                                 ESC: Exit
Version 2.15.1226. Copyright (C) 2012 American Megatrends, Inc.
```

Figure 131: Advanced - PCI Configuration - PIRQ Routing & IRQ Reservation

BIOS setting	Function	Configuration options	Effect
PIRQA	Option for configuring PIRQ A	Auto	Automatic assignment by BIOS and the operating system
		IRQ3, IRQ4, IRQ5, IRQ6, IRQ10, IRQ11, IRQ14, IRQ15	Manual assignment
PIRQB	Option for configuring PIRQ B	Auto	Automatic assignment by BIOS and the operating system
		IRQ3, IRQ4, IRQ5, IRQ6, IRQ10, IRQ11, IRQ14, IRQ15	Manual assignment
PIRQC	Option for configuring PIRQ C	Auto	Automatic assignment by BIOS and the operating system
		IRQ3, IRQ4, IRQ5, IRQ6, IRQ10, IRQ11, IRQ14, IRQ15	Manual assignment
PIRQD	Option for configuring PIRQ D	Auto	Automatic assignment by BIOS and the operating system
		IRQ3, IRQ4, IRQ5, IRQ6, IRQ10, IRQ11, IRQ14, IRQ15	Manual assignment
PIRQE	Option for configuring PIRQ E	Auto	Automatic assignment by BIOS and the operating system
		IRQ3, IRQ4, IRQ5, IRQ6, IRQ10, IRQ11, IRQ14, IRQ15	Manual assignment
PIRQF	Option for configuring PIRQ F	Auto	Automatic assignment by BIOS and the operating system
		IRQ3, IRQ4, IRQ5, IRQ6, IRQ10, IRQ11, IRQ14, IRQ15	Manual assignment
PIRQG	Option for configuring PIRQ G	Auto	Automatic assignment by BIOS and the operating system
		IRQ3, IRQ4, IRQ5, IRQ6, IRQ10, IRQ11, IRQ14, IRQ15	Manual assignment
PIRQH	Option for configuring PIRQ H	Auto	Automatic assignment by BIOS and the operating system
		IRQ3, IRQ4, IRQ5, IRQ6, IRQ10, IRQ11, IRQ14, IRQ15	Manual assignment
Reserve legacy interrupt 1	Prevents the interrupt reserved here from being made available to a PCI or PCI Express device	None	No interrupt assigned
		IRQ3, IRQ4, IRQ5, IRQ6, IRQ10, IRQ11, IRQ14, IRQ15	Reserves IRQx
Reserve legacy interrupt 2	Prevents the interrupt reserved here from being made available to a PCI or PCI Express device	None	No interrupt assigned
		IRQ3, IRQ4, IRQ5, IRQ6, IRQ10, IRQ11, IRQ14, IRQ15	Reserves IRQx

Table 211: Advanced - PCI configuration - PIRQ routing & IRQ reservation - Configuration options

1.4.5 PCI express configuration

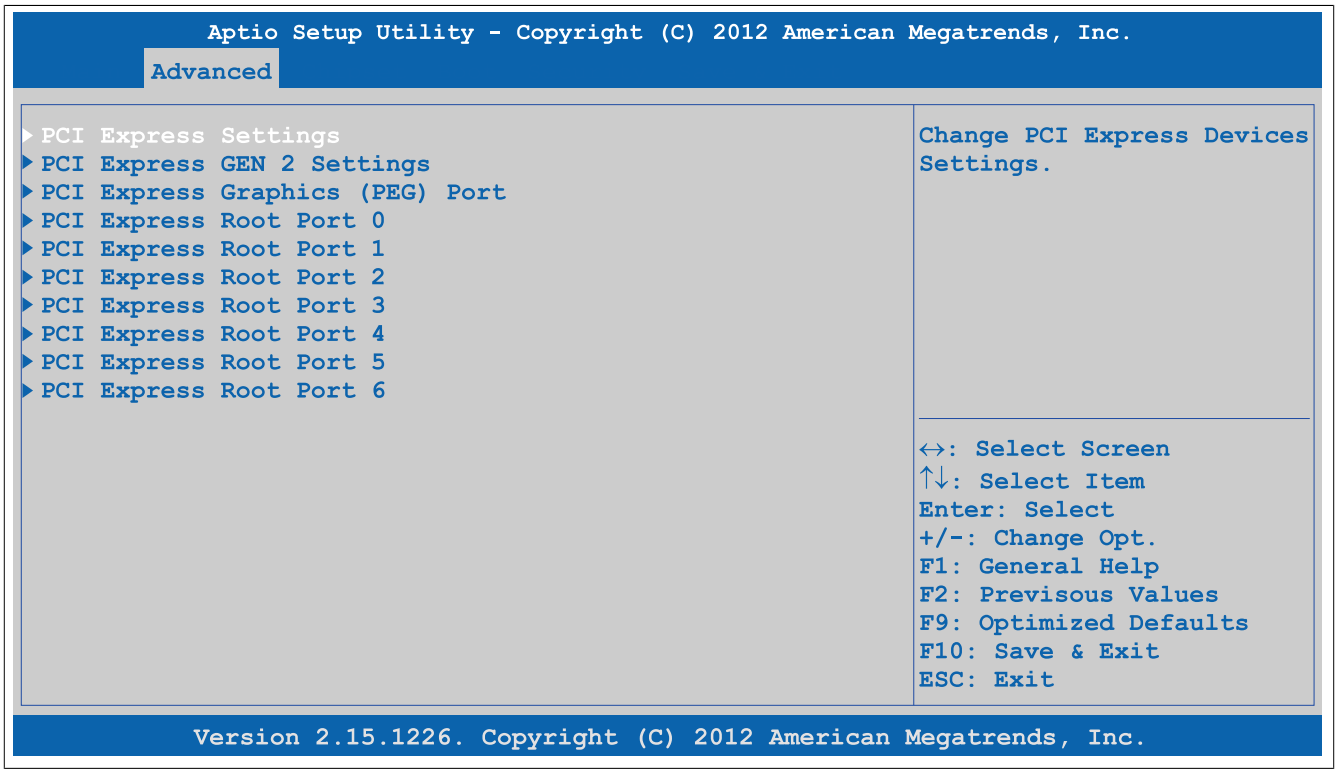

Figure 132: Advanced - PCI Express Configuration

BIOS setting	Function	Configuration options	Effect
PCI Express settings	Configures PCI Express settings	Enter	Opens this submenu See "PCI Express settings" on page 245.
PCI Express GEN 2 settings	Configures PCI Express GEN2 settings	Enter	Opens this submenu See "PCI Express GEN 2 settings" on page 246.
PCI Express graphics (PEG) port	Configures PCI Express graphics settings	Enter	Opens this submenu See "PCI Express graphics (PEG) port" on page 247.
PCI Express root port 0	Configures PCI Express settings on port 0	Enter	Opens this submenu See "PCI Express root port" on page 249.
PCI Express root port 1	Configures PCI Express settings on port 1	Enter	Opens this submenu See "PCI Express root port" on page 249.
PCI Express root port 2	Configures PCI Express settings on port 2	Enter	Opens this submenu See "PCI Express root port" on page 249.
PCI Express root port 3	Configures PCI Express settings on port 3	Enter	Opens this submenu See "PCI Express root port" on page 249.
PCI Express root port 4	Configures PCI Express settings on port 4	Enter	Opens this submenu See "PCI Express root port" on page 249.
PCI Express root port 5	Configures PCI Express settings on port 5	Enter	Opens this submenu See "PCI Express root port" on page 249.
PCI Express root port 6	Configures PCI Express settings on port 6	Enter	Opens this submenu See "PCI Express root port" on page 249.

Table 212: Advanced - PCI Express configuration - Menu

1.4.5.1 PCI Express settings

```
Aptio Setup Utility - Copyright (C) 2012 American Megatrends, Inc.
Advanced

PCI Express Device Register Settings
Relaxed Ordering                    [Disabled]
Extended Tag                        [Disabled]
No Snoop                            [Enabled]
Maximum Payload                     [Auto]
Maximum Read Request                [Auto]
Extended Synch                      [Disabled]
Link Training Retry                 [5]
Link Training Timeout (uS)          100
Unpopulated Links                   [Keep Link On]
Restore PCIE Registers              [Disabled]

Enables or Disables PCI
Express Device Relaxed
Ordering.

↔: Select Screen
↑↓: Select Item
Enter: Select
+/-: Change Opt.
F1: General Help
F2: Previsous Values
F9: Optimized Defaults
F10: Save & Exit
ESC: Exit

Version 2.15.1226. Copyright (C) 2012 American Megatrends, Inc.
```

Figure 133: Advanced - PCI Express Configuration - PCI Express Settings

BIOS setting	Function	Configuration options	Effect
Relaxed ordering	Option for enabling/disabling relaxed ordering	Disabled	Disables this function
		Enabled	Enables this function
Extended tag	Option for enabling/disabling the extended tag	Disabled	Disables this function. Only 5 bits can be used.
		Enabled	Enables this function. Devices with 8 bits in the requester transaction ID field can be used.
No snoop	Option for enabling/disabling the "No snoop" option	Disabled	Disables this function
		Enabled	Enables this function
Maximum payload	Option for setting the maximum surface packet size for data transfers	Auto	Automatically assigns the packet size
		128 bytes to 4096 bytes	Manually assigns the packet size
Maximum read request	Option for setting the maximum read request	Auto	Automatic assignment
		128 bytes to 4096 bytes	Manual assignment
Extended synch	Option for setting an extended synchronization pattern to improve system performance	Disabled	Disables this function
		Enabled	Enables this function
Link training retry	Option for defining the number of times the software should attempt to reroute a link if the previous training attempt was unsuccessful	Disabled	Disables this function
		2	2 link training attempts
		3	3 link training attempts
		5	5 link training attempts
Link training timeout (µS)	Option for defining how many microseconds the software waits before the link training bit in the link status register is queried	10 to 1000	Time setting in µs
Unpopulated links	Option for enabling/disabling PCIe slots where no devices are connected	Keep link on	Keeps PCIe slots where no devices are connected enabled
		Disable link	Disables PCIe slots where no devices are connected to save power
Restore PCIE registers	Option for enabling/disabling the restoring of PCIE registers	Enabled	Enables this function
		Disabled	Disables this function

Table 213: Advanced - PCI Express configuration - PCI Express settings - Configuration options

1.4.5.2 PCI Express GEN 2 settings

```
Aptio Setup Utility - Copyright (C) 2012 American Megatrends, Inc.
Advanced

PCI Express GEN2 Device Register Settings
Completion Timeout                [Default]
ARI Forwarding                    [Disabled]
AtomicOp Requester Enable         [Disabled]
AtomicOp Egress Blocking          [Disabled]
IDO Request Enable                [Disabled]
IDO Completion Enable             [Disabled]
LTR Mechanism Enable              [Disabled]
End-End TLP Prefix Blocking       [Disabled]

PCI Express GEN2 Link Register Settings
Target Link Speed                 [Auto]
Clock Power Management            [Disabled]
Compliance SOS                    [Disabled]
Hardware Autonomous Width         [Enabled]
Hardware Autonomous Speed         [Enabled]

In device Functions that support Completion Timeout programmability, allows systems software to modify the Completion Timeout value. `Default` 50us to 50ms. If `Shorter` is selected, software will use shorter timout ranges supported by hardware.

↔: Select Screen
↑↓: Select Item
Enter: Select
+/-: Change Opt.
F1: General Help
F2: Previsous Values
F9: Optimized Defaults
F10: Save & Exit
ESC: Exit

Version 2.15.1226. Copyright (C) 2012 American Megatrends, Inc.
```

Figure 134: Advanced - PCI Express Configuration - PCI Express GEN 2 Settings

BIOS setting	Function	Configuration options	Effect
Completion timeout	Option for allowing software to modify the completion timeout value if supported by device functions	Default	Timeout range: 50 µs - 50 ms
		Shorter	The software uses shorter timeout ranges than are supported by the hardware.
		Longer	The software uses longer timeout ranges than are supported by the hardware.
		Disabled	Disables this function
ARI forwarding	If supported by the hardware and set to "Enabled", the downstream port disables its traditional "Device number" field being 0 enforcement when turning a Type1 configuration request into a Type0 configuration request, permitting access to extended functions in an ARI device immediately below the port.	Disabled	Disables this function
		Enabled	Enables this function
AtomicOp requester enable	Option for enabling/disabling the AtomicOp requester	Disabled	Disables this function
		Enabled	Enables this function AtomicOp queries are only initiated if the bus master enable bit is set in the command register.
AtomicOp egress blocking	Option for enabling/disabling AtomicOp egress blocking If supported by the hardware and set to "Enabled", outbound AtomicOp requests via egress ports will be locked.	Disabled	Disables this function
		Enabled	Enables this function Blocks outbound AtomicOp requests via the egress port
IDO request enable	If supported by the hardware and set to "Enabled", this option permits setting the number of ID-based ordering (IDO) bit (Attribute[2]) requests to be initiated.	Disabled	Disables this function
		Enabled	Enables this function
IDO completion enable	If supported by the hardware and set to "Enabled", this option permits setting the number of ID-based ordering (IDO) bit (Attribute[2]) requests to be initiated.	Disabled	Disables this function
		Enabled	Enables this function
LTR mechanism enable	If supported by the hardware and set to "Enabled", this enables the Latency Tolerance Reporting (LTR) mechanism.	Disabled	Disables this function
		Enabled	Enables this function
End-End TLP prefix blocking	If supported by the hardware and set to "Enabled", this function will block forwarding of TLPs containing End-End TLP prefixes.	Disabled	Disables this function
		Enabled	Enables this function

Table 214: Advanced - PCI Express configuration - PCI Express GEN 2 settings - Configuration options

BIOS setting	Function	Configuration options	Effect
Target link speed	If supported by the hardware and set to "Force to 2.5 GT/s" for downstream ports, this sets an upper limit on Link operational speed by restricting the values advertised by the upstream component in its training sequences. When "Auto" is selected, hardware-initialized data will be used.	Auto	Target link speed is detached by hardware.
		Force to 2.5 GT/s	Limits target link speed to 2.5 GT/s
		Force to 5.0 GT/s	Limits target link speed to 5 GT/s
Clock power management	If supported by the hardware and set to "Enabled", the device is permitted to use the CLKREQ# signal for power management of the Link clock in accordance with the protocol defined in the appropriate form factor specification.	Disabled	Disables this function
		Enabled	Enables this function
Compliance SOS	If supported by the hardware and set to "Enabled", this will force LTSSM to send SKP ordered sets between sequences when sending compliance patterns or modified compliance patterns.	Disabled	Disables this function
		Enabled	Enables this function
Hardware autonomous width	If supported by the hardware and set to "Disabled", this will disable the hardware's ability to change link width except width size reduction for the purpose of correcting unstable link operation.	Disabled	Disables this function
		Enabled	Enables this function
Hardware autonomous speed	If supported by the hardware and set to "Disabled", this will disable the hardware's ability to change link speed except speed size reduction for the purpose of correcting unstable link operation.	Disabled	Disables this function The PCIe device can no longer change the link speed except to correct unstable operation.
		Enabled	Enables this function

Table 214: Advanced - PCI Express configuration - PCI Express GEN 2 settings - Configuration options

1.4.5.3 PCI Express graphics (PEG) port

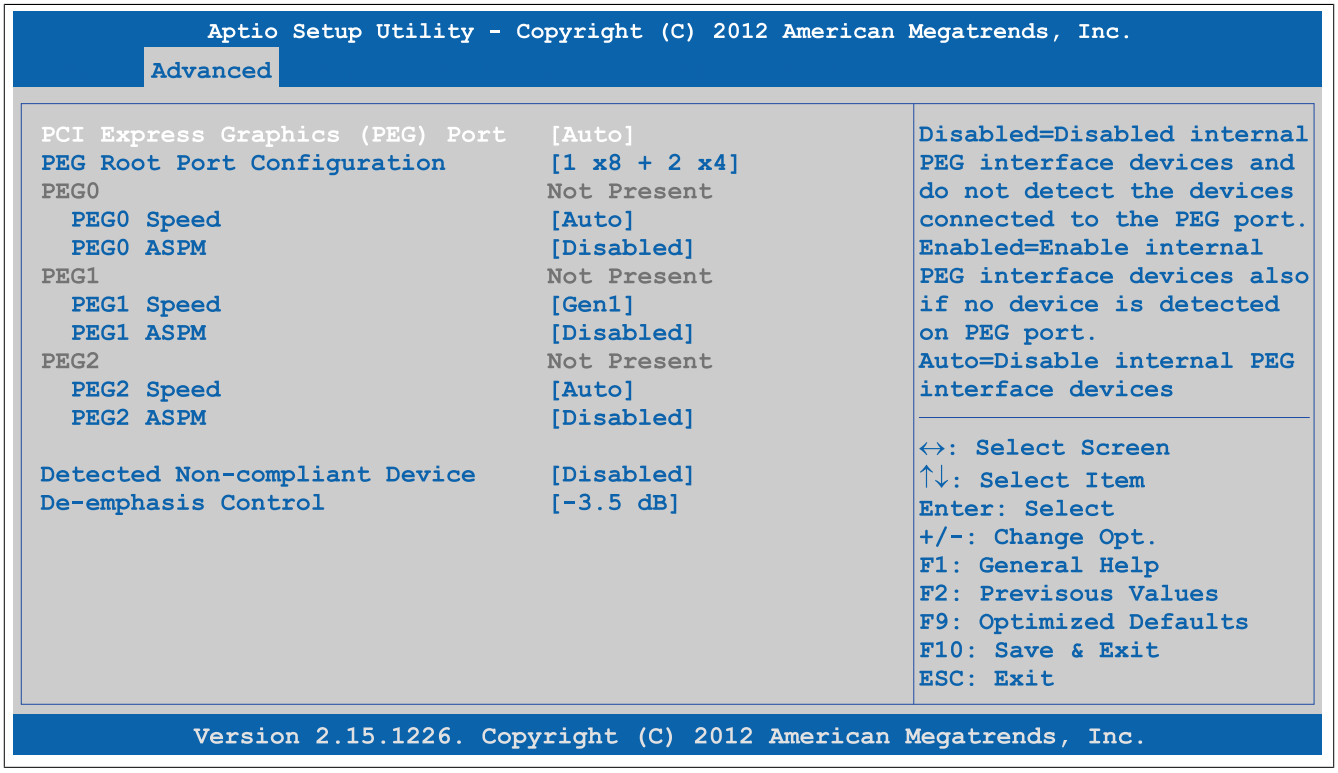

Figure 135: Advanced - PCI Express Configuration - PCI Express Graphics (PEG) Port

BIOS setting	Function	Configuration options	Effect
PCI Express graphics (PEG) port	Option for configuring the PCI Express graphics port	Disabled	Disables internal PEG interface devices. Devices connected to the PEG port are not detected.
		Enabled	Enables internal PEG interface devices even if no device is detected on the PEG port
		Auto	Disables internal PEG interface devices if no device is detected on the PEG port
PEG root port configuration	Option for selecting the root port configuration on the 16 PCIe channels of the PEG port	1 x 16	Configuration with 1 x 16
		2 x 8	Configuration with 2 x 8
		1 x 8 + 2 x 4	Configuration with 1 x 8 and 2 x 4
PEG0	Displays the mode in which the device connected to the PEG0 port is being operated	None	-

Table 215: Advanced - PCI Express configuration - PCI Express graphics (PEG) port - Configuration options

BIOS setting	Function	Configuration options	Effect
PEG0 speed	Option for setting the maximum transfer rate of the PEG0 port	Auto	Selects the maximum transfer rate
		Gen1	Maximum transfer rate = 2.5 GT/s
		Gen2	Maximum transfer rate = 5 GT/s
		Gen3	Maximum transfer rate = 8 GT/s
PEG0 ASPM[1)]	Option for configuring a power saving function for the PEG0 port if it does not require full power	Disabled	Disables this function
		Auto	Automatic assignment by BIOS and the operating system
		ASPM L0s	Enables the L0 energy saving function
		ASPM L1	Enables the L1 energy saving function. Power consumption is lower than with L0, but the exit latency is higher.
		ASPM L0sL1	Automatic assignment of L0s or L1 power saving function by the PCIe device
ASPM L0s[2)]	Option for configuring the L0 power saving function	Disabled	Disables this function
		Root port only	Enables the power saving function for the root port
		Endpoint only	Enables the power saving function for the endpoint port
		Both root and endpoint ports	Enables the power saving function for the root and endpoint ports
PEG1	Displays the mode in which the device connected to the PEG1 port is being operated	None	-
PEG1 speed	Option for setting the maximum transfer rate for the PEG1 port	Auto	Selects the maximum transfer rate
		Gen1	Maximum transfer rate = 2.5 GT/s
		Gen2	Maximum transfer rate = 5 GT/s
		Gen3	Maximum transfer rate = 8 GT/s
PEG1 ASPM[1)]	Option for configuring a power saving function for the PEG1 port if it does not require full power	Disabled	Disables this function
		Auto	Automatic assignment by BIOS and the operating system
		ASPM L0s	Enables the L0 energy saving function
		ASPM L1	Enables the L1 energy saving function. Power consumption is lower than with L0, but the exit latency is higher.
		ASPM L0sL1	Automatic assignment of L0s or L1 power saving function by the PCIe device
ASPM L0s[3)]	Option for configuring the L0 power saving function	Disabled	Disables this function
		Root port only	Enables the power saving function for the root port
		Endpoint only	Enables the power saving function for the endpoint port
		Both root and endpoint ports	Enables the power saving function for the root and endpoint ports
PEG2	Displays the mode in which the device connected to the PEG2 port is being operated	None	-
PEG2 speed	Option for setting the maximum transfer rate for the PEG2 port	Auto	Selects the maximum transfer rate
		Gen1	Maximum transfer rate = 2.5 GT/s
		Gen2	Maximum transfer rate = 5 GT/s
		Gen3	Maximum transfer rate = 8 GT/s
PEG2 ASPM[1)]	Option for configuring a power saving function for the PEG2 port if it does not require full power	Disabled	Disables this function
		Auto	Automatic assignment by BIOS and the operating system
		ASPM L0s	Enables the L0 energy saving function
		ASPM L1	Enables the L1 energy saving function. Power consumption is lower than with L0, but the exit latency is higher.
		ASPM L0sL1	Automatic assignment of L0s or L1 power saving function by the PCIe device
ASPM L0s[4)]	Option for configuring the L0 power saving function	Disabled	Disables this function
		Root port only	Enables the power saving function for the root port
		Endpoint only	Enables the power saving function for the endpoint port
		Both root and endpoint ports	Enables the power saving function for the root and endpoint ports
Detect non-compliant device	Option for detecting incompatible PCI Express devices on the PEG port	Disabled	Disables this function
		Enabled	Enables this function. Even incompatible PCI Express devices are detected on the PEG port.
De-emphasis control	Option for configuring de-emphasis on the PEG port	-6 dB	-6 dB de-emphasis
		-3.5 dB	-35 dB de-emphasis

Table 215: Advanced - PCI Express configuration - PCI Express graphics (PEG) port - Configuration options

1) ASPM = Active State Power Management.
2) This setting is only possible if *PEG0 ASPM* is set to *ASPM L0s* or *ASPM L0sL1*.
3) This setting is only possible if *PEG1 ASPM* is set to *ASPM L0s* or *ASPM L0sL1*.
4) This setting is only possible if *PEG2 ASPM* is set to *ASPM L0s* or *ASPM L0sL1*.

1.4.5.4 PCI Express root port

Warning!

Improper settings can cause instability or device problems. It is therefore strongly recommended that these settings only be changed by experienced users.

```
Aptio Setup Utility - Copyright (C) 2012 American Megatrends, Inc.
Advanced

PCI Express Root Port 0          [Enabled]        Control the PCI Express
ASPM                             [Disabled]       port.
  URR                            [Disabled]
  FER                            [Disabled]
  NFER                           [Disabled]
  CER                            [Disabled]
  CTO                            [Disabled]
  SEFE                           [Disabled]
  SENFE                          [Disabled]
  SECE                           [Disabled]
  PME SCI                        [Enabled]
  Always Enbale Port             [Disabled]       ↔: Select Screen
  PCIe Speed                     [Auto]           ↑↓: Select Item
Assign INT to Root Port          [Enabled]        Enter: Select
Extra Bus Reserved               0                +/-: Change Opt.
Reserved Memory                  10               F1: General Help
Prefetchable Memory              10               F2: Previsous Values
Reserved I/O                     4                F9: Optimized Defaults
                                                  F10: Save & Exit
                                                  ESC: Exit

Version 2.15.1226. Copyright (C) 2012 American Megatrends, Inc.
```

Figure 136: Advanced - PCI Express Configuration - PCI Express Root Port

BIOS setting	Function	Configuration options	Effect
PCI Express root port x	Option for enabling/disabling the PCI Express root port	Enabled	Enables PCI Express root port 1
		Disabled	Disables PCI Express root port 1 and 2
ASPM	*Active State Power Management* Option for configuring a power saving function (L0s/L1) for PCIe devices if they do not require full power	Disabled	Disables this function
		L0s	Enables the L0 energy saving function
		L1	Enables the L1 energy saving function. Power consumption is lower than with L0, but the exit latency is higher.
		L0sL1	Automatic assignment of L0s or L1 power saving function by the PCIe device
		Auto	Automatic assignment by BIOS and the operating system
URR	*Unsupported Request (UR) reporting* Option for reporting unsupported requests. Logging of error messages received by the root port is controlled exclusively by the root control register.	Enabled	Enables this function
		Disabled	Disables this function
FER	*Fatal error reporting* Option for reporting fatal errors. All of the functions of a multifunction device will be monitored. The report for the root port takes place internally inside the root complex.	Enabled	Enables this function
		Disabled	Disables this function
NFER	*Non-fatal error reporting* Option for reporting non-fatal errors. All of the functions of a multifunction device will be monitored. The report for the root port takes place internally inside the root complex.	Enabled	Enables this function
		Disabled	Disables this function
CER	*Correctable error reporting* Option for reporting non-fatal errors. All of the functions of a multifunction device will be monitored. The report for the root port takes place internally inside the root complex.	Enabled	Enables this function
		Disabled	Disables this function
CT0	*PCI Express completion timer T0*	Enabled	Enables this function

Table 216: Advanced - PCI Express configuration - PCI Express root port - Configuration options

BIOS setting	Function	Configuration options	Effect
	Option for enabling/disabling the PCI Express completion timer **Information:** **This setting should be set to "Enabled" if the system detected an ROB (processor reorder buffer) timeout.**	Disabled	Disables this function
SEFE	*System error on fatal error* Option for generating a system error if a fatal error is reported by a device on the root port or by the root port itself	Enabled	Enables this function
		Disabled	Disables this function
SENFE	*System error on non-fatal error* Option for generating a system error if a non-fatal error is reported by a device on the root port or by the root port itself	Enabled	Enables this function
		Disabled	Disables this function
SECE	*System error on correctable error* Option for generating a system error if a correctable error is reported by a device on the root port or by the root port itself	Enabled	Enables this function
		Disabled	Disables this function
PME SCI	Option for generating an SCI if power management is detected	Enabled	Enables this function Enables the root port to generate an SCI if power management is detected
		Disabled	Disables this function
Always enable port	Option for keeping the port enabled constantly	Enabled	Enables this function
		Disabled	Disables this function
PCIe speed	Option for setting the PCI Express transfer rate	Auto	Automatically sets the transfer rate
		Gen1	Maximum transfer rate = 2.5 GT/s
		Gen2	Maximum transfer rate = 5 GT/s
Assign INT to root port	Option for enabling/disabling the IRQ for the root port	Disabled	Disables this function
		Enabled	Enables this function
Extra bus reserved	Option for reserving the extra bus to bridges behind this root bridge	0 to 7	
Reserved memory	Option for configuring reserved memory for this root bridge	0 to 20	
Prefetchable memory	Option for configuring prefetchable memory for this root bridge	1 to 20	
Reserved I/O	Option for configuring a reserved I/O range (4K/8K/12K/16K/20K) for this root bridge	4 to 20	

Table 216: Advanced - PCI Express configuration - PCI Express root port - Configuration options

1.4.6 ACPI settings

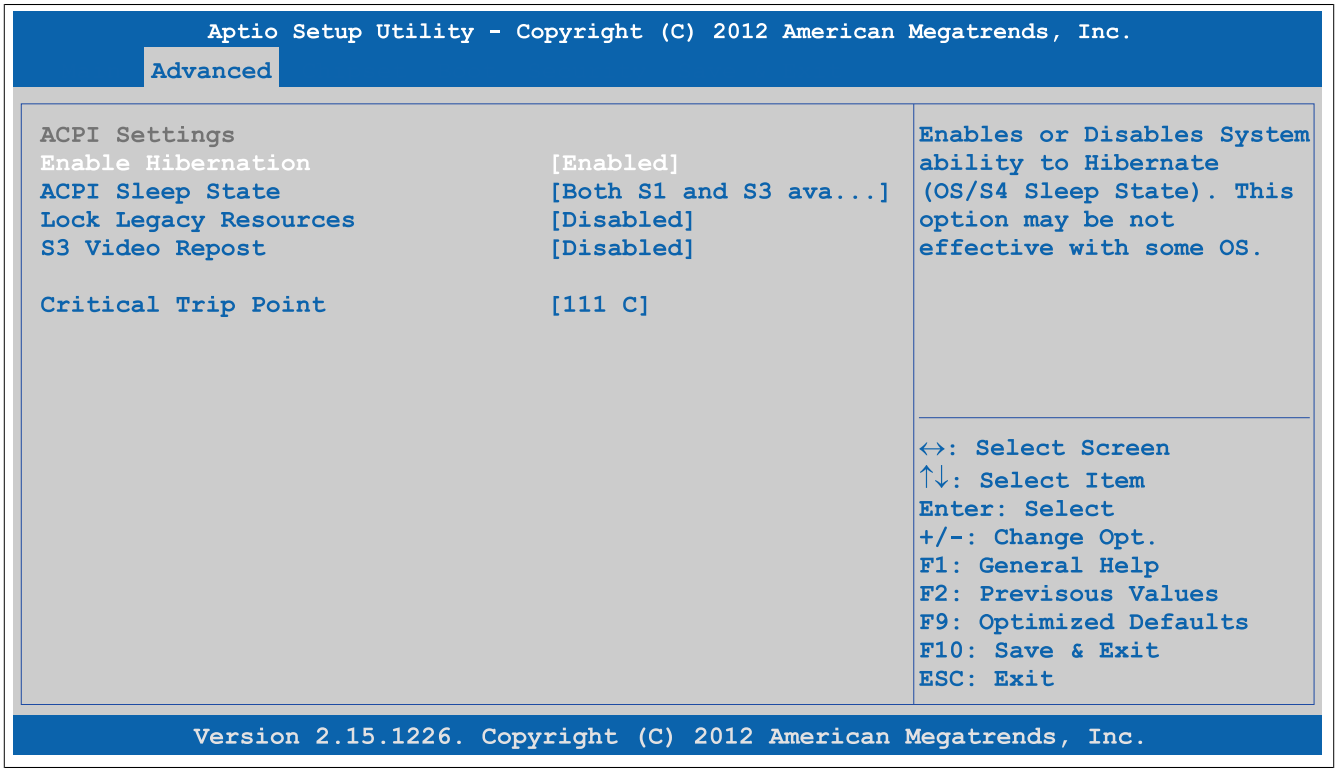

Figure 137: Advanced - ACPI Settings

BIOS setting	Function	Configuration options	Effect
Enable hibernation	Option for enabling/disabling the hibernate function. This can put the operating system into the S4 state. This option may not have any effect on some operating systems.	Disabled	Disables this function
		Enabled	Enables this function
ACPI sleep state	Selects the ACPI status to be used when Suspend mode is enabled	Suspend disabled	Disables this function
		S1 only (CPU stop clock)	Sets S1 as Suspend mode. Only a few functions are disabled and are available again at the touch of a button.
		S3 only (Suspend to RAM)	Sets S3 as Suspend mode. The current state of the operating system is written to RAM, which is then the only component to receive power.
		Both S1 and S3 available for OS to choose from	Enables S1 and S3. The states can then be selected by the operating system.
Lock legacy resources	Option for configuring whether the operating system is permitted to configure legacy resources	Disabled	Disables this function
		Enabled	Enables this function
S3 video repost	Option for configuring whether the graphic ROM should be reposted after starting in the S3 status	Disabled	Disables this function
		Enabled	Enables this function
Critical trip point	Option for configuring a CPU temperature at which the operating system automatically shuts down	POR	Sets the critical trip point to 105°C
		87 C, 95 C, 103 C, 111 C, 119 C, 127 C	Temperature setting for the critical trip point. Configurable in increments of 8°C.

Table 217: Advanced - ACPI settings - Configuration options

1.4.7 RTC wake settings

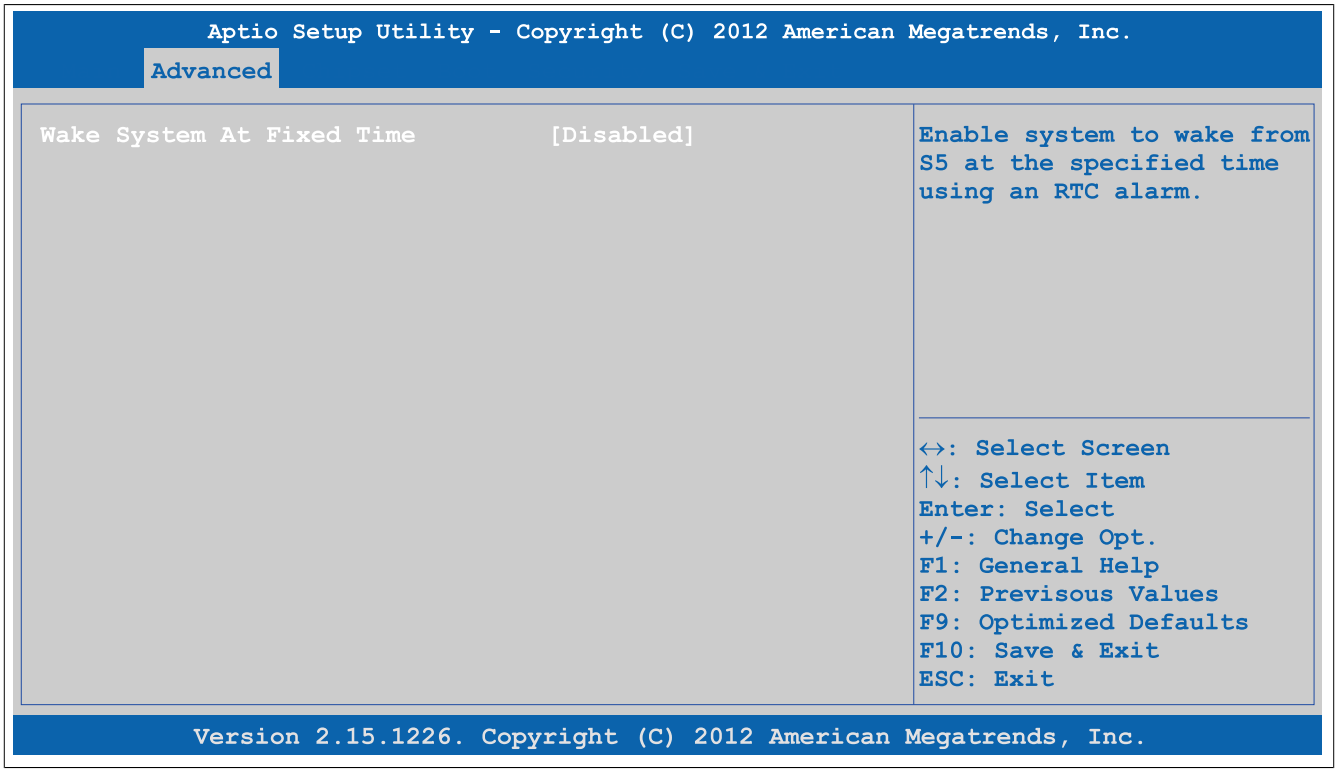

Figure 138: Advanced - RTC Wake Settings

BIOS setting	Function	Configuration options	Effect
Wake system at fixed time	Option for setting the time (to the second) when the system should boot from a switched-off state (ACPI S5)	Disabled	Disables this function
		Enabled	Enables this function
Wake up hour	Option for setting the hour	0 to 23	Example: If set to 3, the system will start up at 3 AM. If set to 15, the system will start up at 3 PM.
Wake up minute	Option for setting the minute	0 to 59	Example: If set to 15, the system will start up at minute 15.
Wake up second	Option for setting the second	0 to 59	Example: If set to 32, the system will start up at second 32.

Table 218: Advanced - RTC wake settings - Configuration options

1.4.8 CPU configuration

Information:

The settings shown may vary depending on the CPU board being used.

```
Aptio Setup Utility - Copyright (C) 2012 American Megatrends, Inc.
Advanced

▸ CPU Information                                    CPU Information

  Hyper-threading                    [Enabled]
  Active Processor Cores             [All]
  Limit CPUID Maximum                [Disabled]
  Execute Disable Bit                [Enabled]
  Intel Virtualization Technology    [Disabled]
  Hardware Prefetcher                [Enabled]
  Adjacent Cache Line Prefetch       [Enabled]
  TCC Activation Offset              0
  Primary Plane Current value        0
  Secondary Plane Current value      0

  EIST                               [Enabled]          ↔: Select Screen
  Turbo Mode                         [Enabled]          ↑↓: Select Item
  P-State Reduction                  [Disabled]         Enter: Select
  CPU C3 Report                      [Disabled]         +/-: Change Opt.
  CPU C6 Report                      [Disabled]         F1: General Help
  CPU C7 Report                      [Disabled]         F2: Previsous Values
  Configurable TDP                   [TD NOMINAL]       F9: Optimized Defaults
  Config TDP LOCK                    [Disabled]         F10: Save & Exit
  Long duration power limit          0                  ESC: Exit
  Long duration maintained           1
  Short duration power limi          0
  ACPI T State                       [Disabled]

Version 2.15.1226. Copyright (C) 2012 American Megatrends, Inc.
```

Figure 139: Advanced - CPU Configuration

BIOS setting	Function	Configuration options	Effect
CPU information	Displays CPU properties	Enter	Opens this submenu See "CPU information" on page 254.
Hyper-threading	Option for enabling/disabling Intel Hyper-Threading Technology	Disabled	Disables this function
		Enabled	Enables this function Each processor core can execute multiple tasks (threads) at the same time. Intel Hyper-Threading Technology increases processor throughput and improves the overall performance of multi-thread software.
Active processor cores	Option for configuring which processor cores are to be used	All	Uses all processor cores
		1	Only uses one processor core
Limit CPUID maximum	Option for limiting the CPUID value. This may be necessary for older operating systems. **Information:** **This option must be set to *Disabled* when using Windows XP.**	Disabled	The processor returns the current maximum value when the CPUID value is requested.
		Enabled	The processor limits the maximum CPUID value to 03h if necessary if the processor supports a higher value.
Execute disable bit	Option for enabling/disabling hardware support for prevention of data execution	Disabled	Disables this function
		Enabled	Enables this function
Intel virtualization technology	Option for enabling/disabling a virtual machine **Information:** **A restart is required in order to apply changes made to this setting.**	Disabled	Disables this function
		Enabled	Allows a virtual machine to use the additional hardware capacity
Hardware prefetcher	Option for enabling/disabling the hardware prefetcher	Disabled	Disables this function
		Enabled	Enables this function. Data is temporarily stored in cache memory to increase performance.

Table 219: Advanced - CPU configuration - Configuration options

BIOS setting	Function	Configuration options	Effect
Adjacent cache line prefetch	Option for enabling/disabling the adjacent cache line prefetcher	Disabled	Disables this function
		Enabled	Enables this function. Loads the current and next line to cache in order to accelerate the read process
TCC[1] activation offset	Option for configuring the offset of the thermal control circuit (TCC) at temperatures below the TCC activation temperature	0 to 50	Sets the offset value
Primary plane current value	Option for configuring the maximum current on the primary plane at any single time	0 to 255	Setting from 0 to 255
Secondary plane current value	Option for configuring the maximum current on the secondary plane at any single time	0 to 255	Setting from 0 to 255
EIST	Option for enabling/disabling Intel® SpeedStep™ technology The processor clock speed is increased or decreased according to the number of calculations that must be made. As a result, the power consumption depends largely on the processor load.	Disabled	Disables Intel® SpeedStep™ technology
		Enabled	Enables Intel® SpeedStep™ technology The processor speed is regulated by the operating system.
Turbo mode	Option for enabling/disabling Intel® Turbo Boost Technology	Disabled	Disables Intel® Turbo Boost technology
		Enabled	Enables Intel® Turbo Boost technology
P state reduction	Option for reducing the CPU performance and power usage.	Disabled	Disables this function
		by 1, 2, 3, 4, 5, 6, 7, 8	The performance is reduced by the set value depending on the CPU used.
CPU C3 report	Option for enabling/disabling the CPU C3 (ACPI C2) report to the operating system	Disabled	Disables this function. No report is sent to the operating system.
		Enabled	Enables this function
CPU C6 report	Option for enabling/disabling the CPU C6 (ACPI C3) report to the operating system	Disabled	Disables this function. No report is sent to the operating system.
		Enabled	Enables this function
CPU C7 report	Option for enabling/disabling the CPU C7 (ACPI C3) report to the operating system	Disabled	Disables this function. No report is sent to the operating system.
		Enabled	Enables this function
Configurable TDP[2]	Option for configuring the TDP level	TDP NOMINAL	Value remains at the TDP level
		TDP DOWN	Value falls below the TDP level, with the CPU running at lower power
		TDP UP	Value rises above the TDP level, with the CPU running at higher power
		Disabled	Disables this function
Config TDP LOCK	Option for locking and configuring the TDP control register	Disabled	Disables this function
		Enabled	Enables this function
Long duration power limit	Long duration power limit in watts	0 to 255	Setting from 0 to 255
Long duration maintained	Time period during which the "Long duration power" option is enabled	0 to 120	Setting from 0 to 120
Short duration power limit	Short duration power limit in watts	0 to 255	Setting from 0 to 255
ACPI T state	Option for enabling/disabling ACPI T state support.	Disabled	Disables this function
		Enabled	Enables this function

Table 219: Advanced - CPU configuration - Configuration options

1) TCC = Thermal control circuit.
2) TDP = Thermal design power.

1.4.8.1 CPU information

Information:

The settings shown may vary depending on the CPU board being used.

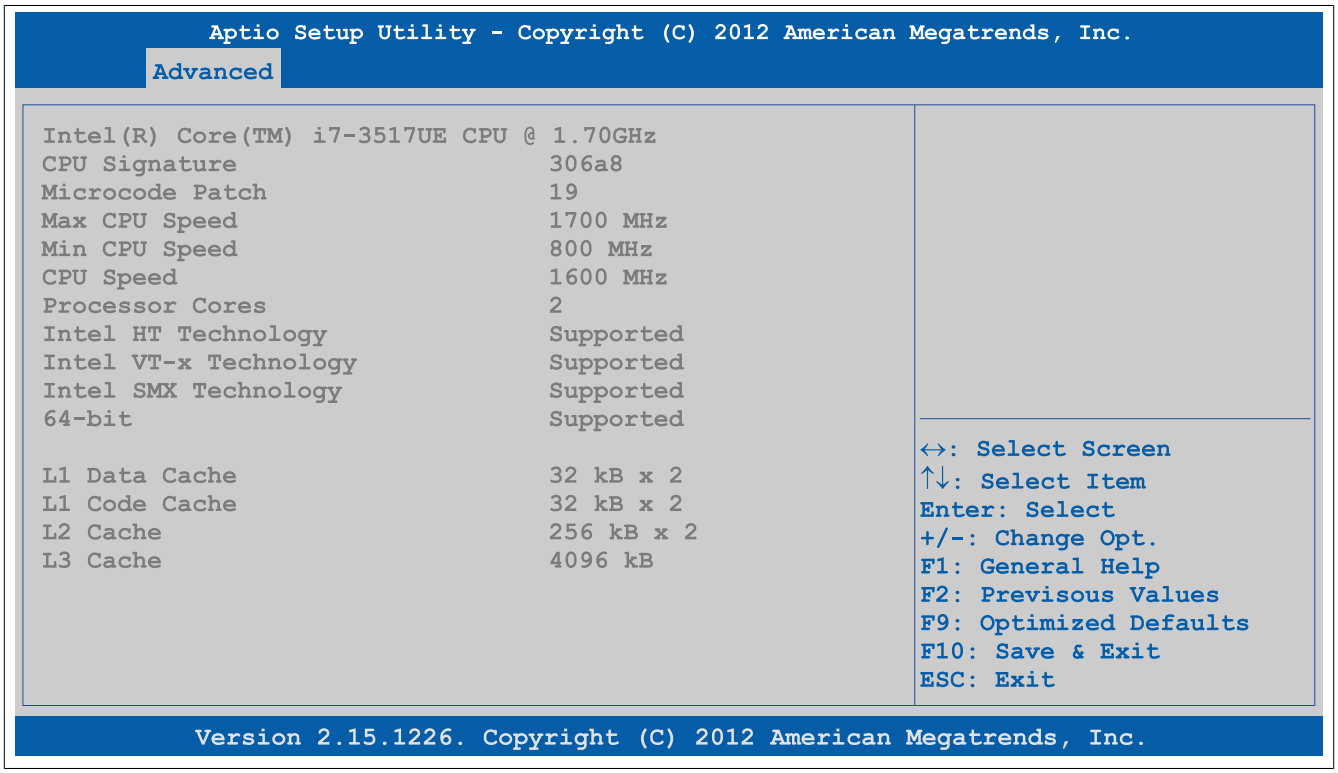

Figure 140: Advanced - CPU Configuration - CPU Information

BIOS setting	Function	Configuration options	Effect
CPU signature	Displays the CPU ID	None	-
Microcode patch	Displays the microcode patch ID	None	-
Max CPU speed	Displays the maximum processor frequency	None	-
Min CPU speed	Displays the minimum processor frequency	None	-
CPU speed	Displays the processor frequency	None	-
Processor cores	Displays the number of processor cores	None	-
Intel HT technology	Displays whether the processor supports HT technology	None	-
Intel VT-x technology	Displays whether the processor supports VT-x technology	None	-
Intel SMX technology	Displays whether the processor supports SMX technology	None	-
64-bit	Displays whether the processor supports Intel 64-bit architectures	None	-
L1 data cache	Displays the size of the L1 data cache	None	-
L1 code cache	Displays the size of the L1 code cache	None	-
L2 cache	Displays the size of the L2 code cache	None	-
L3 cache	Displays the size of the L3 cache	None	-

Table 220: Advanced - CPU configuration - CPU information - Configuration options

1.4.9 Chipset configuration

```
Aptio Setup Utility - Copyright (C) 2012 American Megatrends, Inc.
Advanced

PCH LAN Controller                [Enabled]
  Wake on LAN                     [Enabled]

Azalia                            [Auto]
  Azalia PME                      [Disabled]
  Azalia Internal HDMI Codec      [Disabled]

High Prescision Timer             [Enabled]
CF9h Global Reset                 [Host only]
VT-d                              [Enabled]
PCI Express Clock Gating          [Disabled]
DMI Link ASPM PCH Side            [Disabled]
PCIe-USB Glitch W/A               [Disabled]

SB CRID                           [Disabled]
NB CRID                           [Disabled]

Disconnect external SMBus         [Never]

DMI Configuration
DMI                               X4 Gen2
DMI Vc1 Control                   [Enabled]
DMI Vcp Control                   [Enabled]
DMI Vcm Control                   [Enabled]
DMI Link ASPM CPU Side            [Disabled]
DMI Extended Synch Control        [Disabled]
DMI Gen 2                         [Auto]

Enable or disable onboard
NIC.

↔: Select Screen
↑↓: Select Item
Enter: Select
+/-: Change Opt.
F1: General Help
F2: Previsous Values
F9: Optimized Defaults
F10: Save & Exit
ESC: Exit

Version 2.15.1226. Copyright (C) 2012 American Megatrends, Inc.
```

Figure 141: Advanced - Chipset Configuration

BIOS setting	Function	Configuration options	Effect
PCH LAN controller	Option for turning the onboard LAN controller (ETH1) on and off	Disabled	Disables the controller
		Enabled	Enables the controller
Wake on LAN	Option for switching on the system via the on-board LAN controller (ETH1)	Enabled	Enables this function. The LAN controller can switch on the system.
		Disabled	Disables this function. The LAN controller cannot switch on the system.
Azalia	Option for enabling/disabling the audio controller	Disabled	Disables the audio controller
		Enabled	Enables the audio controller
		Auto	Only enables the audio controller if a device is connected
Azalia PME	Option for enabling/disabling power management for the audio controller	Disabled	Disables this function
		Enabled	Enables this function
Azalia internal HDMI codec	Option for enabling/disabling the internal HDMI codec for Azalia	Disabled	Disables audio output
		Enabled	Enables audio output
High-precision timer	The HPET is a timer inside the PC. It is able to trigger an interrupt with a high degree of accuracy, which allows other programs to better synchronize a variety of applications.	Disabled	Disables this function
		Enabled	Enables this function. This function is recommended for multimedia applications.
CF9h global reset	Option for setting the restart on the CF9h reset register	Host only	Chipset only
		Host+ME	Chipset and management engine
VT-d	Option for enabling/disabling a virtual machine **Information:** **A restart is required in order to apply changes made to this setting.**	Enabled	Enables this function Allows a virtual machine to use the additional hardware capacity
		Disabled	Disables this function
PCI Express clock gating	Option for enabling/disabling PCI Express clock gating for each individual root port	Disabled	Disables this function
		Enabled	Enables this function
DMI link ASPM PCH side	Option for enabling/disabling active state power management (ASPM) for the DMI link on the PCH side	Disabled	Disables this function
		Enabled	Enables this function
PCIe USB glitch W/A	Option for enabling/disabling the PCIe USB glitch if a malfunctioning USB device is connected after the PCIe/PEG port	Disabled	Disables this function
		Enabled	Enables this function

Table 221: Advanced - Chipset configuration - Configuration options

BIOS setting	Function	Configuration options	Effect
SB CRID	Option for enabling/disabling the southbridge compatible revision ID	Disabled	Disables this function
		Enabled	Enables this function
NB CRID	Option for enabling/disabling the northbridge compatible revision ID	Disabled	Disables this function
		Enabled	Enables this function
Disconnect external SM-Bus	Option for always/never disconnecting the external SMBus	Always	Always allows disconnection of the SMBus
		During Post	Allows disconnection of the SMBus until EOP (end of POST)
		Never	Never allow disconnection of the SMBus
DMI Configuration			
DMI	Displays the DMI version / generation	None	-
DMI Vc1 control	Option for enabling/disabling DMI Vc1	Enabled	Enables this function
		Disabled	Disables this function
DMI Vcp control	Option for enabling/disabling DMI Vcp	Enabled	Enables this function
		Disabled	Disables this function
DMI Vcm control	Option for enabling/disabling DMI Vcm	Enabled	Enables this function
		Disabled	Disables this function
DMI link ASPM CPU side	Option for enabling/disabling active state power management (ASPM) for the DMI link on the CPU side	Disabled	Disables this function
		L0s	Enables the L0 energy saving function
		L1	Enables the L1 energy saving function. Power consumption is lower than with L0, but the exit latency is higher.
		L0sL1	Automatic assignment of L0s or L1 power saving function by the PCIe device
DMI extended synch control	Option for enabling/disabling DMI extended synchronization	Enabled	Enables this function
		Disabled	Disables this function
DMI Gen 2	Option for enabling/disabling DMI Gen 2	Auto	Disabled for IVB A0 MB/DT and IVB B0 MB, enabled for other CPUs
		Enabled	Enables this function
		Disabled	Disables this function

Table 221: Advanced - Chipset configuration - Configuration options

1.4.10 SATA configuration

```
Aptio Setup Utility - Copyright (C) 2012 American Megatrends, Inc.
Advanced

SATA Controller(s)                    [Enabled]
SATA Mode Selection                   [AHCI]
SATA Test Mode                        [Disabled]
Aggressive LPM Support                [Disabled]
SATA Controller Speed                 [Default]
SMART Self Test                       [Disabled]

▶ Software Feature Mask Configuration

Serial ATA Port 0                     ST9250311CS     (250.0)
  Port 0                              [Enabled]
  Hot Plug                            [Disabled]
  External SATA                       [Disabled]
  SATA Device Type                    [Hard Disk Driver]
  Spin Up Device                      [Disabled]
Serial ATA Port 1                     Empty
  Port 1                              [Enabled]
  Hot Plug                            [Disabled]
  External SATA                       [Disabled]
  SATA Device Type                    [Hard Disk Driver]
  Spin Up Device                      [Disabled]
Serial ATA Port 2                     Empty
  Port 2                              [Enabled]
  Hot Plug                            [Disabled]
  External SATA                       [Disabled]
  Spin Up Device                      [Disabled]
Serial ATA Port 3                     Empty
  Port 3                              [Enabled]
  Hot Plug                            [Disabled]
  External SATA                       [Disabled]
  Spin Up Device                      [Disabled]

Enable or disable SATA
Device.

↔: Select Screen
↑↓: Select Item
Enter: Select
+/-: Change Opt.
F1: General Help
F2: Previsous Values
F9: Optimized Defaults
F10: Save & Exit
ESC: Exit

Version 2.15.1226. Copyright (C) 2012 American Megatrends, Inc.
```

Figure 142: Advanced - SATA Configuration

BIOS setting	Function	Configuration options	Effect
SATA controller(s)	Option for configuring SATA support	Enabled	Provides support for SATA devices
		Disabled	No support for SATA devices
SATA mode selection	Option for configuring supported serial ATA connections	IDE	Uses the serial ATA hard drive as a parallel ATA physical drive It is not possible to configure the SATA port.
		AHCI	The AHCI setting enables the internal memory driver for SATA functions, which increases the storage performance for random read-write access by allowing the drive itself to determine the sequence of commands.
		RAID	RAID 0, 1, 5, 10 or Intel® Matrix Storage technology can be configured here with the serial ATA hard drive.
SATA test mode	Option for configuring the test function. This is only used for test measurements.	Enabled	Enables this function
		Disabled	Disables this function
Aggressive LPM support	Aggressive Link Power Management (ALPM) is a power saving method for SATA drives.	Enabled	Enables this function
		Disabled	Disables this function
SATA controller speed	Option for setting the maximum SATA transfer rate The transfer rate is also dependent on the maximum possible transfer rate of the drive.	Gen1	Maximum SATA transfer rate = 1.5 Gbit/s
		Gen2	Maximum SATA transfer rate = 3.0 Gbit/s
		Gen3	Maximum SATA transfer rate = 6.0 Gbit/s
		Default	The maximum SATA transfer rate is set by default.
IDE legacy / Native mode selection	Selects legacy or native mode	Legacy	Legacy IDE mode
		Native	Native IDE mode
SMART self test	Option for configuring the SMART self-test function on all hard drives	Enabled	Enables this function
		Disabled	Disables this function
Software feature mask configuration	Configuration of various drive settings	Enter	Opens this submenu See "Software feature mask configuration" on page 259.

Table 222: Advanced - SATA configuration - Configuration options

BIOS setting	Function	Configuration options	Effect
Alternate ID[1]	Option for enabling/disabling a report of the alternate device ID	Enabled	Enables this function
		Disabled	Disables this function
Serial ATA port 0	Displays the device connected to SATA port 0	None	-
Port 0	Option for enabling/disabling SATA port 0	Disabled	Disables SATA port 0
		Enabled	Enables SATA port 0
Hot plug	Option for configuring hot plugging for SATA interface 0	Disabled	Disables hot plugging for SATA interface 0
		Enabled	Enables hot plugging for SATA interface 0. Devices can be connected/disconnected during operation.
External SATA	Option for configuring the external SATA port	Disabled	Uses the port externally as eSATA
		Enabled	Uses the port internally as SATA
Mechanical presence switch[2]	Option for enabling/disabling the report if this port has a mechanical presence switch	Disabled	Disables this function
		Enabled	Enables this function
SATA device type	Identifies whether a solid state or hard disk drive is connected to the SATA port	Hard disk drive	A hard disk is connected to the SATA port.
		Solid-state drive	A solid-state drive is connected to the SATA port.
Spin up device	Option for configuring an initialization sequence for the connected device during startup for the SATA port	Disabled	Disables this function
		Enabled	Enables this function
Serial ATA port 1	Displays the device connected to SATA port 1	None	-
Port 1	Option for enabling/disabling SATA port 1	Disabled	Disables SATA port 1
		Enabled	Enables SATA port 1
Hot plug	Option for configuring hot plugging for SATA interface 1	Disabled	Disables hot plugging for SATA interface 1
		Enabled	Enables hot plugging for SATA interface 1. Devices can be connected/disconnected during operation.
External SATA	Option for configuring the external SATA port	Disabled	Uses the port externally as eSATA
		Enabled	Uses the port internally as SATA
Mechanical presence switch[2]	Option for enabling/disabling the report if this port has a mechanical presence switch	Disabled	Disables this function
		Enabled	Enables this function
SATA device type	Identifies whether a solid state or hard disk drive is connected to the SATA port	Hard disk drive	A hard disk is connected to the SATA port.
		Solid-state drive	A solid-state drive is connected to the SATA port.
Spin up device	Option for configuring an initialization sequence for the connected device during startup for the SATA port	Disabled	Disables this function
		Enabled	Enables this function
Serial ATA port 2	Displays the device connected to SATA port 2	None	-
Port 2	Option for enabling/disabling SATA port 2	Disabled	Disables SATA port 2
		Enabled	Enables SATA port 2
Hot plug	Option for configuring hot plugging for SATA port 2	Disabled	Disables hot plugging for SATA port 2
		Enabled	Enables hot plugging for SATA interface 2. Devices can be connected/disconnected during operation.
External SATA	Option for configuring the external SATA port	Disabled	Uses the port externally as eSATA
		Enabled	Uses the port internally as SATA
Mechanical presence switch[2]	Option for enabling/disabling the report if this port has a mechanical presence switch	Disabled	Disables this function
		Enabled	Enables this function
SATA device type	Identifies whether a solid state or hard disk drive is connected to the SATA port	Hard disk drive	A hard disk is connected to the SATA port.
		Solid-state drive	A solid-state drive is connected to the SATA port.
Spin up device	Option for configuring an initialization sequence for the connected device during startup for the SATA port	Disabled	Disables this function
		Enabled	Enables this function
Serial ATA port 3	Displays the device connected to SATA port 3	None	-
Port 3	Option for enabling/disabling SATA port 3	Disabled	Disables SATA port 3
		Enabled	Enables SATA port 3
Hot plug	Option for configuring hot plugging for SATA port 3	Disabled	Disables hot plugging for SATA port 3
		Enabled	Enables hot plugging for SATA interface 3. Devices can be connected/disconnected during operation.
External SATA	Option for configuring the external SATA port	Disabled	Uses the port externally as eSATA
		Enabled	Uses the port internally as SATA
Mechanical presence switch[2]	Option for enabling/disabling the report if this port has a mechanical presence switch	Disabled	Disables this function
		Enabled	Enables this function
SATA device type	Identifies whether a solid state or hard disk drive is connected to the SATA port	Hard disk drive	A hard disk is connected to the SATA port.
		Solid-state drive	A solid-state drive is connected to the SATA port.
Spin up device	Option for configuring an initialization sequence for the connected device during startup for the SATA port	Disabled	Disables this function
		Enabled	Enables this function

Table 222: Advanced - SATA configuration - Configuration options

1) This setting is only possible if *SATA mode selection* is set to *RAID*.
2) This setting is only possible if *Hot plug* is set to *Enabled*.

1.4.10.1 Software feature mask configuration

```
Aptio Setup Utility - Copyright (C) 2012 American Megatrends, Inc.
Advanced

RAID0                                [Enabled]        Enable or Disable RAID0
RAID1                                [Enabled]        feature.
RAID10                               [Enabled]
RAID5                                [Enabled]
Intel Rapid Recovery Technology      [Enabled]
OROM UI and BANNER                   [Enabled]
HDD Unlock                           [Enabled]
LED Locate                           [Enabled]
IRRT Only on eSATA                   [Enabled]
Smart Response Technology            [Enabled]
OROM UI Delay                        [2 Seconds]

                                                  ↔: Select Screen
                                                  ↑↓: Select Item
                                                  Enter: Select
                                                  +/-: Change Opt.
                                                  F1: General Help
                                                  F2: Previsous Values
                                                  F9: Optimized Defaults
                                                  F10: Save & Exit
                                                  ESC: Exit

Version 2.15.1226. Copyright (C) 2012 American Megatrends, Inc.
```

Figure 143: Advanced - SATA Configuration - Software Feature Mask Configuration

BIOS setting	Function	Configuration options	Effect
RAID0	Option for enabling/disabling a RAID0 system	Disabled	Disables this function
		Enabled	Enables this function
RAID1	Option for enabling/disabling a RAID1 system	Disabled	Disables this function
		Enabled	Enables this function
RAID10	Option for enabling/disabling a RAID10 system	Disabled	Disables this function
		Enabled	Enables this function
RAID5	Option for enabling/disabling a RAID5 system	Disabled	Disables this function
		Enabled	Enables this function
Intel Rapid Recovery technology	Option for enabling/disabling Intel® Rapid Recovery Technology	Disabled	Disables this function
		Enabled	Enables this function
OROM UI and BANNER	Option for displaying the OROM UI	Disabled	Does not display the OROM UI or banner
		Enabled	Displays the OROM UI
HDD unlock	Option for enabling/disabling the HDD password unlock mechanism in the operating system	Disabled	Disables the HDD password unlock mechanism
		Enabled	Enables the HDD password unlock mechanism
LED locate	Option for displaying the LED/SGPIO when a drive is connected	Disabled	Disables this function
		Enabled	Enables an indicator for when a drive is connected
IRRT only on eSATA[1)]	Option for configuring Intel® Rapid Recovery technology	Disabled	Every RAID system can use internal and eSATA drives.
		Enabled	Only IRRT systems can use internal eSATA drives.
Smart Response technology	Option for enabling/disabling Intel® Smart Response Technology	Disabled	Disables this function
		Enabled	Enables this function
OROM UI delay	Option for displaying the delay time for the OROM UI splash screen	2 seconds, 4 seconds, 6 seconds, 8 seconds	Setting in seconds

Table 223: Advanced - SATA configuration - Software feature mask configuration - Configuration options

1) IRRT = Intel Rapid Recovery technology.

1.4.11 Memory configuration

```
Aptio Setup Utility - Copyright (C) 2012 American Megatrends, Inc.
Advanced

▶ Memory Information                                   Memory Information

  DIMM profile                          [Default DIMM profile]
  Memory Frequency Limiter              [Auto]
  No Fan Memory Frequency Limiter       [Enabled]
  ECC Support                           [Disabled]
  Max TOLUD                             [Dynamic]
  NMode Support                         [Auto]
  Memory Scrambler                      [Enabled]
  Memory Refresh Rate                   [Disabled]
  MRC Fast Boot                         [Enabled]
  Force Cold Reset                      [Enabled]
  DIMM Exit Mode                        [Fast Exit]
    Power Down Mode                     [PPD]
  Scrambler Seed Generation Off         [Disabled]
  Memory Remap                          [Enabled]
  Memory Alias Check                    [Disabled]
  Channel A DIMM Control                [Enable Both DIMMS]
  Channel B DIMM Control                [Enable Both DIMMS]

                                        ↔: Select Screen
                                        ↑↓: Select Item
                                        Enter: Select
                                        +/-: Change Opt.
                                        F1: General Help
                                        F2: Previsous Values
                                        F9: Optimized Defaults
                                        F10: Save & Exit
                                        ESC: Exit

Version 2.15.1226. Copyright (C) 2012 American Megatrends, Inc.
```

Figure 144: Advanced - Memory Configuration

BIOS setting	Function	Configuration options	Effect
Memory information	Displays main memory properties	Enter	Opens this submenu See "Memory information" on page 261.
DIMM profile	Option for configuring the main memory timing profile	Default DIMM profile	Uses the default profile
		Custom profile	Uses a user-defined profile
		XMP Profile 1	Uses XMP profile 1
		XMP profile 2	Uses XMP profile 2
Custom profile control[1]	Configuration of the main memory timing profile	Enter	Opens this submenu See "Custom profile control" on page 262.
Memory frequency limiter[2]	Option for setting the maximum possible main memory frequency **Information:** **If a fan kit is not installed in the device, then the main memory frequency is limited to 1067 MHz when set to "Auto".**	Auto	Automatic configuration
		1067, 1333, 1600, 1867, 2133, 2400, 2667	Manual configuration
No fan memory frequency limiter	Option for automatically throttling down the main memory frequency when the system unit has no fan	Disabled	Disables this function
		Enabled	Enables this function
ECC support	Option for enabling/disabling main memory ECC support	Disabled	Disables this function
		Enabled	Enables this function
Max TOLUD[3]	Option for configuring the maximum "Top of low usable DRAM"	Dynamic	Automatically adjusts the TOLUD based on the MMIO length of the graphics controller
		1 GB, 1.25 GB, 1.5 GB, 1.75 GB, 2 GB, 2.25 GB, 2.5 GB, 2.75 GB, 3 GB, 3.25 GB	Manual setting of the TOLUD
NMode support	Option for configuring NMode support	Auto	Sets automatically
		1N mode	Sets 1N mode
		2N mode	Sets 2N mode
Memory scrambler	Option for enabling/disabling memory scrambler support	Enabled	Enables this function
		Disabled	Disables this function
Memory refresh rate	Option for configuring the RAM refresh rate	Disabled	Sets automatically
		x1	Manual setting
		x2	Manual setting
MRC fast boot	Option for enabling/disabling MRC fast booting	Enabled	Enables this function
		Disabled	Disables this function
Force cold reset	Option for enabling/disabling force cold resets	Enabled	Enables this function
		Disabled	Disables this function
DIMM exit mode	Option for configuring the DIMM exit mode	Auto	Sets automatically

Table 224: Advanced - Memory configuration - Configuration options

BIOS setting	Function	Configuration options	Effect
		Slow exit	Enables slow exit mode
		Fast exit	Enables fast exit mode
Power down mode	Option for setting the power saving function for main memory	No power down	No power down
		APD	Active power down
		PPD	Precharged power down
		APD-PPD	Active power down - Precharged power down
Scrambler seed generation off	Option for enabling/disabling the scrambler seed generation off function	Enabled	Enables this function
		Disabled	Disables this function
Memory remap	Option for enabling/disabling memory remapping over 4 GB	Enabled	Enables this function
		Disabled	Disables this function
Memory alias check	Option for enabling/disabling the memory alias check function	Enabled	Enables this function
		Disabled	Disables this function
Channel A DIMM control	Option for configuring main memory channel A	Enable both DIMMS	Enables both channel A main memory modules
		Disable DIMM0	Disables channel A DIMM0 main memory
		Disable DIMM1	Disables channel A DIMM1 main memory
		Disable both DIMMS	Disables both channel A main memory modules
Channel B DIMM control	Option for configuring main memory channel B	Enable both DIMMS	Enables both channel B main memory modules.
		Disable DIMM0	Disables channel B DIMM0 main memory
		Disable DIMM1	Disables channel B DIMM1 main memory
		Disable both DIMMS	Disables both channel B main memory modules

Table 224: Advanced - Memory configuration - Configuration options

1) This setting is only shown if *DIMM profile* is set to *Custom profile*.
2) This setting is only possible if *No fan memory frequency limiter* is set to *Disabled*.
3) TOLUD = Top of low usable DRAM.

1.4.11.1 Memory information

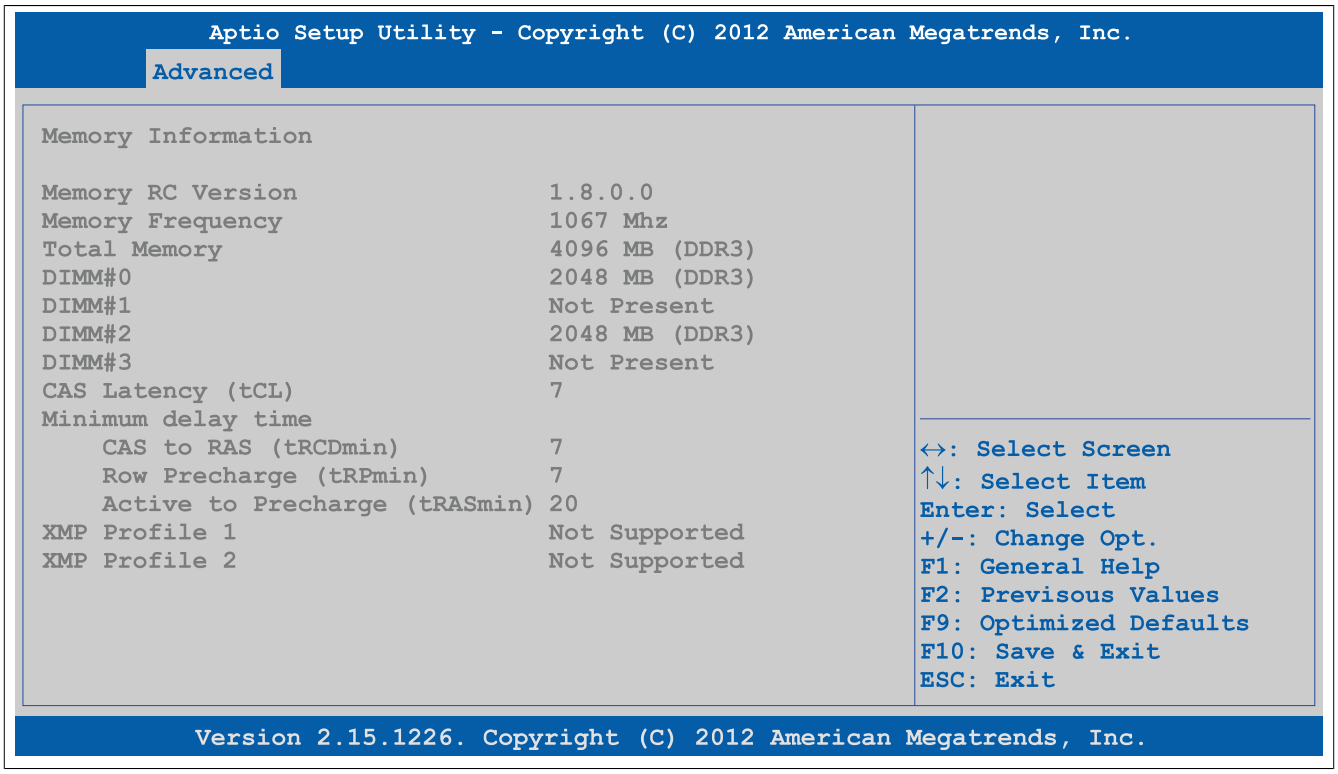

Figure 145: Advanced - Memory Configuration - Memory Information

BIOS setting	Function	Configuration options	Effect
Memory RC version	Displays the main memory RC version	None	-
Memory frequency	Displays the main memory frequency	None	-
Total memory	Displays the total amount of main memory	None	-
DIMM#0	Displays the amount of main memory in DIMM slot 0	None	-
DIMM#1	Displays the amount of main memory in DIMM slot 1	None	-
DIMM#2	Displays the amount of main memory in DIMM slot 2	None	-
DIMM#3	Displays the amount of main memory in DIMM slot 3	None	-
CAS latency (tCL)	Displays the CAS latency	None	-

Table 225: Advanced - Memory configuration - Memory information

BIOS setting	Function	Configuration options	Effect
Minimum delay time			
CAS to RAS (tRCDmin)	Displays the delay time between CAS# and RAS#	None	-
Row precharge (tRPmin)	Displays the row precharge time	None	-
Active to precharge (tRASmin)	Displays the minimum active RAS# time	None	-
XMP Profile 1	Displays XMP profile 1	None	-
XMP profile 2	Displays XMP profile 2	None	-

Table 225: Advanced - Memory configuration - Memory information

1.4.11.2 Custom profile control

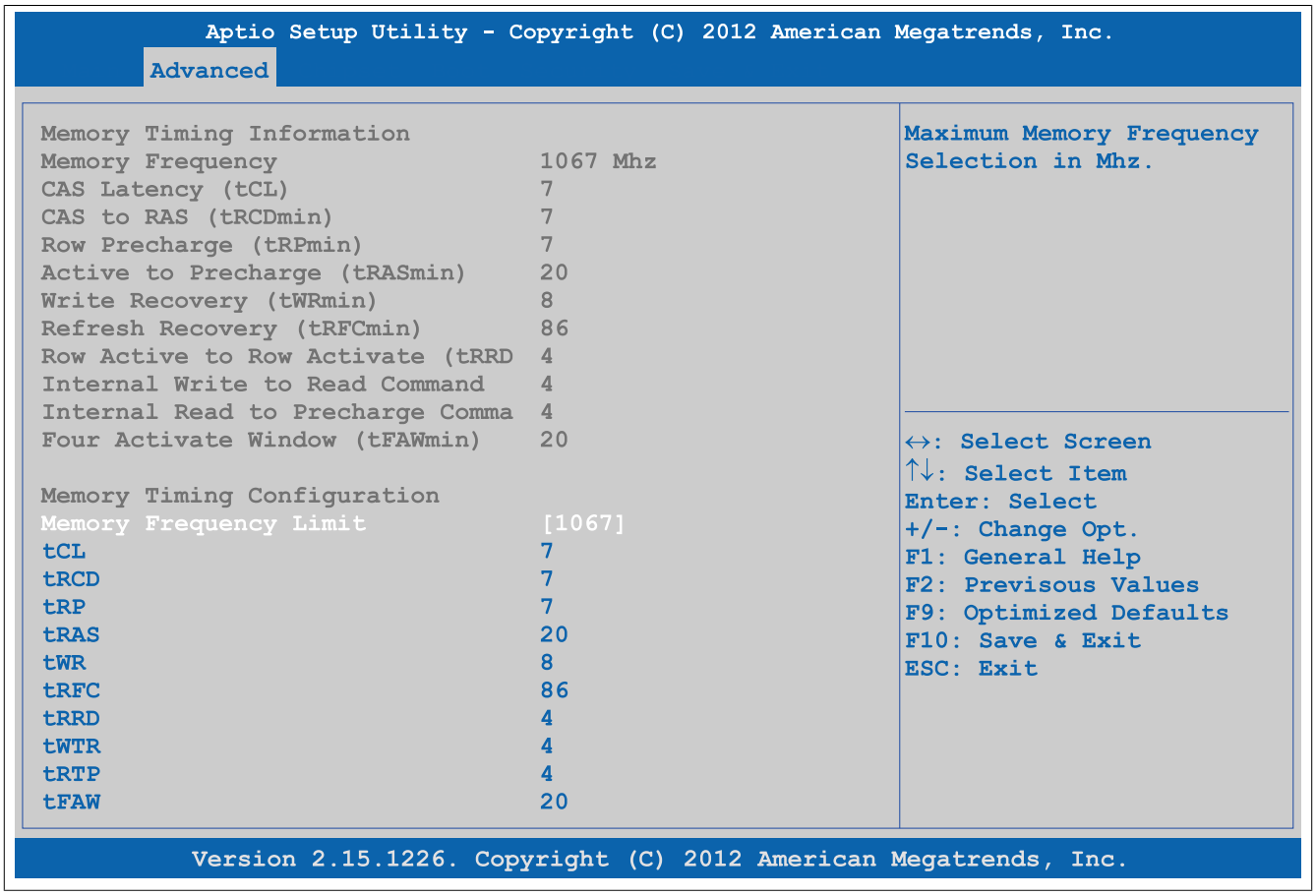

Figure 146: Advanced - Memory Configuration - Custom Profile Control

BIOS setting	Function	Configuration options	Effect
Memory frequency limiter	Sets the maximum main memory frequency in MHz	1067, 1333, 1600, 1867, 2133, 2400, 2667	
tCL	Sets the CAS latency	4 to 18	
tRCD	Sets the minimum "CAS to RAS" time	1 to 38	
tRP	Sets the minimum "Row precharge" time	1 to 38	
tRAS	Sets the minimum "Active to precharge" time	1 to 586	
tWR	Sets the minimum "Write recovery" time	1 to 38	
tRFC	Sets the minimum "Refresh recovery" time	1 to 9363	
tRRD	Sets the minimum "Row active to row active" time	1 to 38	
tWTR	Sets the minimum "Internal write to read command" time	1 to 38	
tRTP	Sets the minimum "Internal read to precharge command" time	1 to 38	
tFAW	Sets the minimum "Four active window" time	1 to 586	

Table 226: Advanced - Memory configuration - Custom profile control - Configuration options

1.4.12 USB configuration

```
Aptio Setup Utility - Copyright (C) 2012 American Megatrends, Inc.
Advanced

USB Devices:
      1 Keyboard, 1 Mouse, 3 Hubs

EHCI1 (Ports 0 - 5)                [Enabled]
EHCI2 (Ports 6 - 7)                [Enabled]
xHCI Mode                          [Auto]
  HS Port #1 Switchable            [Enabled]
  HS Port #2 Switchable            [Enabled]
  HS Port #3 Switchable            [Enabled]
  HS Port #4 Switchable            [Enabled]
▶ Per Port USB Disable Control

Legacy USB Support                 [Enabled]
▶ Per Port Legacy USB Support Control

XHCI Legacy Support                [Enabled]
XHCI Hand-off                      [Enabled]
EHCI Hand-off                      [Disabled]
USB Mass Storage Driver Support    [Enabled]
USB transfer time-out              [20 sec]
Device reset time-out              [20 sec]
Device power-up delay              [Auto]
Overcurrent Protection             [Disabled]

Control the USB EHCI (USB
2.0) functions.
One EHCI controller mus
always be enabled.

↔: Select Screen
↑↓: Select Item
Enter: Select
+/-: Change Opt.
F1: General Help
F2: Previsous Values
F9: Optimized Defaults
F10: Save & Exit
ESC: Exit

Version 2.15.1226. Copyright (C) 2012 American Megatrends, Inc.
```

Figure 147: Advanced - USB Configuration

BIOS setting	Function	Configuration options	Effect
EHCI1 (ports 0-5)	Sets USB EHCI controller 1 for USB interfaces #0 through #5 (USB1 through USB4 on the system unit, USB on the monitor/panel interface and the bus unit)	Enabled	Enables EHCI controller 1
		Disabled	Disables EHCI controller 1
EHC2 (ports 6-7)	Sets USB EHCI controller 1 for USB interfaces #6 through #7 (USB5 on the system unit and USB on the monitor/panel option)	Enabled	Enables EHCI controller 2
		Disabled	Disables EHCI controller 2
xHCI mode	Option for configuring the xHCI controller	Smart auto	USB 3.0 interfaces are not handled as USB 3.0 until after the operating system has started. Until then, they are handled as USB 2.0 interfaces. If the APC910 is rebooted, then the USB 3.0 interfaces are handled as USB 3.0 during booting.
		Auto	During the BIOS boot procedure, USB 3.0 interfaces are handled as USB 2.0 interfaces. They are not handled as USB 3.0 interfaces until after the operating system has started and the USB 3.0 driver has been loaded.
		Enabled	Enables the xHCI controller so that USB 3.0 interfaces are always identified as such
		Disabled	Disables the xHCI controller. All USB 3.0 interfaces become USB 2.0 interfaces.
HS port #1 switchable	Option to switch HS port 1 between xHCI and EHCI	Disabled	Routes port 1 to EHCI and operates it as USB 2.0
		Enabled	Routes port 1 to xHCI and enables the corresponding HS port
HS port #2 switchable	Option to switch HS port 2 between xHCI and EHCI	Disabled	Routes port 2 to EHCI and operates it as USB 2.0
		Enabled	Routes port 2 to xHCI and enables the corresponding HS port
HS port #3 switchable	Option to switch HS port 3 between xHCI and EHCI	Disabled	Routes port 3 to EHCI and operates it as USB 2.0
		Enabled	Routes port 3 to xHCI and enables the corresponding HS port
HS port #4 switchable	Option to switch HS port 4 between xHCI and EHCI	Disabled	Routes port 4 to EHCI and operates it as USB 2.0
		Enabled	Routes port 4 to xHCI and enables the corresponding HS port
Per port USB disable control	Option for enabling/disabling individual USB interfaces	Enter	Opens this submenu See "Per port USB disable control" on page 264.

Table 227: Advanced - USB configuration - Configuration options

BIOS setting	Function	Configuration options	Effect
Legacy USB support	Option for configuring legacy USB support. USB interfaces do not function during startup. USB support is available again after the operating system has started. A USB keyboard is still recognized during POST.	Enabled	Enables this function
		Disabled	Disables this function
		Auto	Automatic enabling
Per port legacy USB support control	Option for enabling/disabling legacy USB support for individual USB interfaces	Enter	Opens this submenu See "Per port legacy USB support control" on page 265.
XHCI legacy support	Option for enabling/disabling legacy support for the XHCI controller	Enabled	Uses USB 3.0 for all USB 3.0 interfaces
		Disabled	Uses USB 2.0 or 1.1 for all USB interfaces
XHCI Hand-off	Option for configuring support for operating systems without a fully automated XHCI function	Enabled	Enables USB 3.0 support
		Disabled	Disables this function. On operating systems that do not have a fully automated XHCI function, only USB 2.0 is used with USB devices.
EHCI hand-off	Option for configuring support for operating systems without a fully automated EHCI function	Disabled	Disables this function. On operating systems that do not have a fully automated EHCI function, only USB 1.1 is used with USB devices.
		Enabled	Enables USB 2.0 support
USB mass storage driver support	Option for enabling/disabling USB mass storage device support	Enabled	Enables this function
		Disabled	Disables this function
USB transfer time-out	Option for configuring the timeout value for control, bulk and interrupt transfers	1 sec, 5 sec, 10 sec, 20 sec	Value in seconds
Device reset time-out	Option for configuring the time that POST waits for USB memory storage devices after the device start command is issued	10 sec, 20 sec, 30 sec, 40 sec	Value in seconds
Device power-up delay	Option to set the maximum time to wait for a USB device to report to the host controller	Auto	Sets the maximum time automatically. For a root port, 100 ms is set; for a hub port, the data from the hub descriptor is used.
		Manual	Allows the maximum time to be entered manually using the "Device power-up delay in seconds" option
Device power-up delay in seconds[1)]	Option for setting the device power-up delay time manually	1 to 40	Value in seconds
Overcurrent protection	Option for configuring overcurrent protection for all USB interfaces	Disabled	Disables this function
		Enabled	Enables this function

Table 227: Advanced - USB configuration - Configuration options

1) This setting is only possible if *Device power-up delay* is set to *Manual*.

1.4.12.1 Per port USB disable control

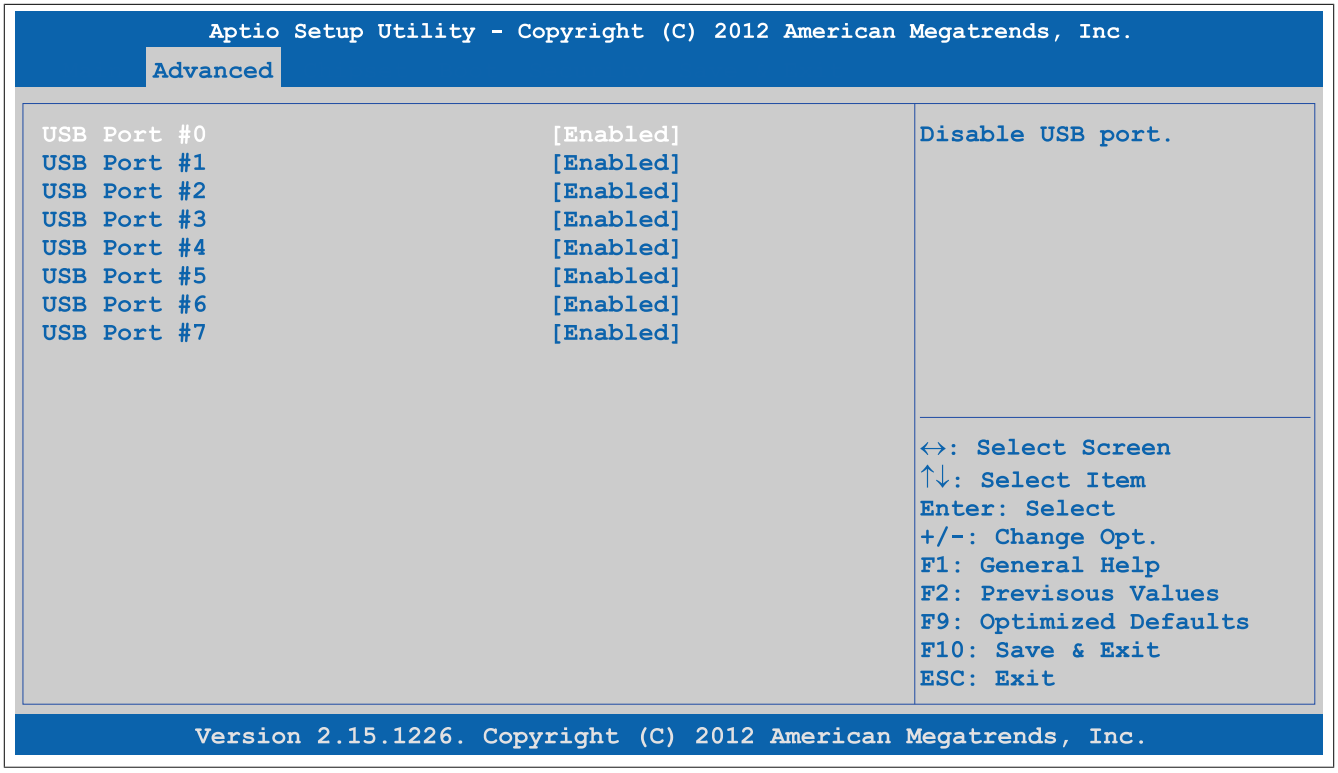

Figure 148: Advanced - USB Configuration - Per Port USB Disable Control

BIOS setting	Function	Configuration options	Effect
USB port #0	Option for enabling/disabling the USB4 port	Disabled	Disables the USB interface
		Enabled	Enables this USB interface
USB port #1	Option for enabling/disabling the USB2 interface	Disabled	Disables the USB interface
		Enabled	Enables this USB interface
USB port #2	Option for enabling/disabling the USB3 port	Disabled	Disables the USB interface
		Enabled	Enables this USB interface
USB port #3	Option for enabling/disabling the USB1 interface	Disabled	Disables the USB interface
		Enabled	Enables this USB interface
USB port #4	Option for enabling/disabling the USB interface on the bus unit	Disabled	Disables the USB interface
		Enabled	Enables this USB interface
USB port #5	Option for enabling/disabling the USB interface on the monitor/panel interface	Disabled	Disables the USB interface
		Enabled	Enables this USB interface
USB port #6	Option for enabling/disabling the USB5 port	Disabled	Disables the USB interface
		Enabled	Enables this USB interface
USB port #7	Option for enabling/disabling the USB interface on the monitor/panel option	Disabled	Disables the USB interface
		Enabled	Enables this USB interface

Table 228: Advanced - USB configuration - Per port USB disable control - Configuration options

1.4.12.2 Per port legacy USB support control

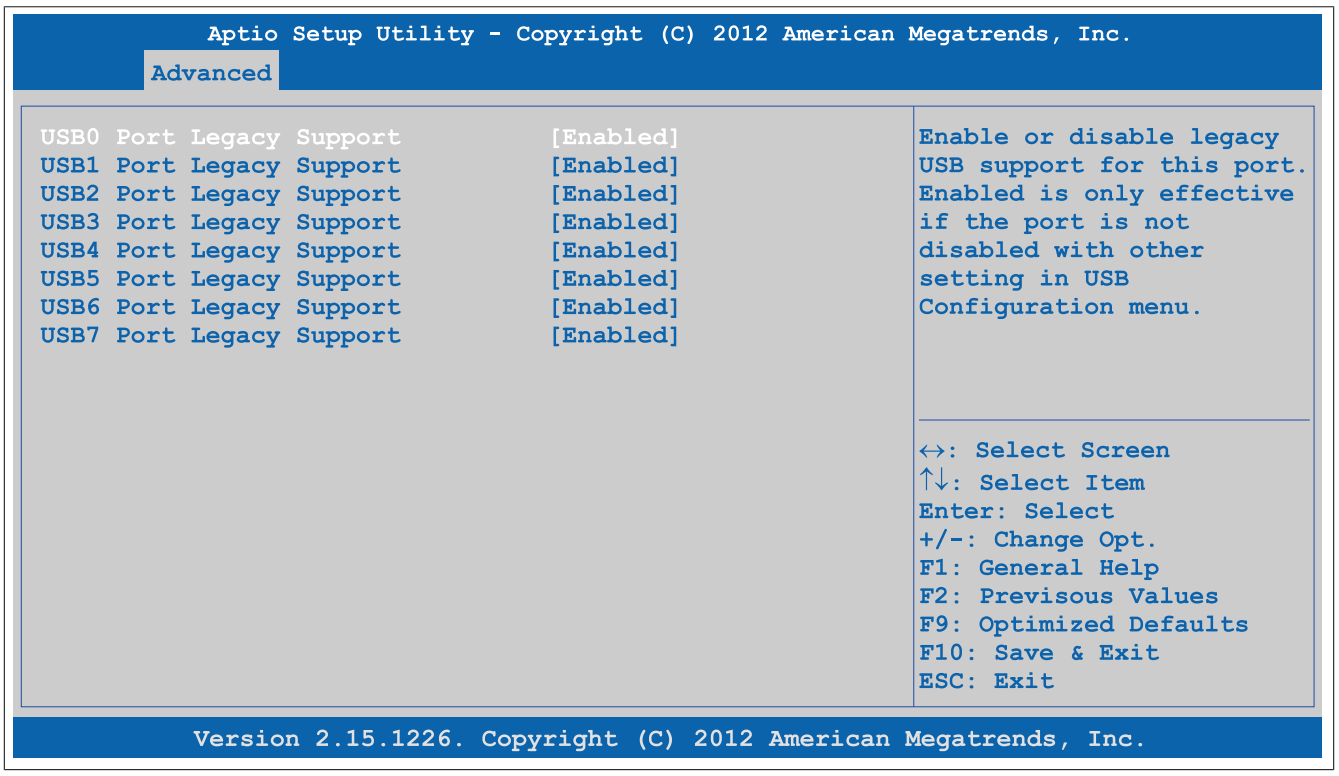

Figure 149: Advanced - USB Configuration - Per Port Legacy USB Support Control

BIOS setting	Function	Configuration options	Effect
USB0 port legacy support	Option for enabling/disabling legacy support for the USB4 port	Disabled	Disables the USB interface
		Enabled	Enables this USB interface
USB1 port legacy support	Option for enabling/disabling legacy support for the USB2 interface	Disabled	Disables the USB interface
		Enabled	Enables this USB interface
USB2 port legacy support	Option for enabling/disabling legacy support for the USB3 port	Disabled	Disables the USB interface
		Enabled	Enables this USB interface
USB3 port legacy support	Option for enabling/disabling legacy support for the USB1 interface	Disabled	Disables the USB interface
		Enabled	Enables this USB interface
USB4 port legacy support	Option for enabling/disabling legacy support for the USB interface on the bus unit	Disabled	Disables the USB interface
		Enabled	Enables this USB interface
USB5 port legacy support	Option for enabling/disabling legacy support for the USB interface on the monitor/panel interface	Disabled	Disables the USB interface
		Enabled	Enables this USB interface
USB6 port legacy support	Option for enabling/disabling legacy support for the USB5 port	Disabled	Disables the USB interface
		Enabled	Enables this USB interface
USB7 port legacy support	Option for enabling/disabling legacy support for the USB interface on the monitor/panel option	Disabled	Disables the USB interface
		Enabled	Enables this USB interface

Table 229: Advanced - USB configuration - Per port legacy USB support control - Configuration options

1.4.13 Serial port console redirection

```
Aptio Setup Utility - Copyright (C) 2012 American Megatrends, Inc.
Advanced

COMA
Console Redirection                    [Enabled]
▶ Console Redirection Settings

                                        ↔: Select Screen
                                        ↑↓: Select Item
                                        Enter: Select
                                        +/-: Change Opt.
                                        F1: General Help
                                        F2: Previsous Values
                                        F9: Optimized Defaults
                                        F10: Save & Exit
                                        ESC: Exit

Version 2.15.1226. Copyright (C) 2012 American Megatrends, Inc.
```

Figure 150: Advanced - Serial Port Console Redirection

BIOS setting	Function	Configuration options	Effect
Console redirection	Option for enabling/disabling console redirection	Disabled	Disables this function
		Enabled	Enables this function
Console redirection settings	Configures the remote console	Enter	Opens this submenu See "Console redirection settings" on page 266.

Table 230: Advanced - Serial port console redirection - Configuration options

1.4.13.1 Console redirection settings

```
Aptio Setup Utility - Copyright (C) 2012 American Megatrends, Inc.
Advanced

COMA
Console Redirection Settings

Terminal Type                          [ANSI]
Baudrate                               [115200]
Data Bits                              [8]
Parity                                 [None]
Stop Bits                              [1]
Flow Control                           [None]
VT-UTF8 Combo Key Support              [Enabled]
Recorder Mode                          [Disabled]
Resolution 100x31                      [Disabled]
Legacy OS Redirection Resolution       [80x24]
Putty KeyPad                           [Vt100]
Redirection After BIOS POST            [Always Enable]

                                        ↔: Select Screen
                                        ↑↓: Select Item
                                        Enter: Select
                                        +/-: Change Opt.
                                        F1: General Help
                                        F2: Previsous Values
                                        F9: Optimized Defaults
                                        F10: Save & Exit
                                        ESC: Exit

Version 2.15.1226. Copyright (C) 2012 American Megatrends, Inc.
```

Figure 151: Advanced - Console Redirection - Console Redirection Settings

BIOS setting	Function	Configuration options	Effect
Terminal type	Option for configuring keyboard input	VT100	Enables the VT100 convention (ASCII character set)
		VT100+	Enables the VT100+ convention (ASCII character set and support for color, function keys, etc)
		VT-UTF8	Enables the VT-UTF8 convention (uses UTF-8 encoding to assign Unicode characters to one or more bytes)
		ANSI	Enables the ANSI convention (extended ASCII character set)
Baud rate	Option for setting the transfer rate of the serial interface (bits per second)	1200, 2400, 4800, 9600, 19200, 38400, 57600, 115200	Enables a transfer rate of x bits
Data bits	Option for configuring the character length (data bits) to use for serial communication	7	Character length with 7 bits
		8	Character length with 8 bits
Parity	Option for configuring the parity bit to use for serial communication	None	Parity bit not used
		Even	Uses an even number of parity bits
		Odd	Uses an odd number of parity bits
		Mark	Parity bit always 1
		Space	Parity bit always 0
Stop bits	Option for configuring the stop bits to use for serial communication	1	Uses 1 bit as the stop bit
		2	Uses 2 bits as the stop bit
Flow control	Option for configuring the data flow control	None	Disables data flow control
		Hardware RTS/CTS	Enables hardware handshake
VT-UTF8 combo key support	Option for enabling/disabling VT-UTF8 combo key support for ANSI and VT100 connections	Disabled	Disables this function
		Enabled	Enables this function
Recorder mode	Option for enabling/disabling recorder mode	Disabled	Disables this function
		Enabled	Enables this function When this setting is used, all control escape sequences are suppressed from the serial redirection output. This may lead to incorrectly formatted screen output but makes automatic storage of the serial console output easier.
Resolution 100x31	Option for enabling/disabling extended terminal resolution	Disabled	Disables this function
		Enabled	Enables this function
Legacy OS redirection resolution	Option for configuring the number of lines and columns for legacy OS redirection	80x24	Resolution of 80x24
		80x25	Resolution of 80x25
Putty keypad	Terminal emulation	VT100	VT100 emulation
		LINUX	LINUX emulation
		XTERMR6	XTERMR6 emulation
		SCO	SCO emulation
		ESCN	ESCN emulation
		VT400	VT400 emulation
Redirection After BIOS POST	Option for configuring redirection after startup	Always enable	Keeps redirection enabled permanently
		Bootloader	Enables redirection during system startup and when charging

Table 231: Advanced - Console redirection - Console redirection settings - Configuration options

1.5 Boot

```
Aptio Setup Utility - Copyright (C) 2012 American Megatrends, Inc.
Main  Advanced  Boot  Security  Save & Exit

▸ Boot Device Priority                    Boot device priority sub
▸ Boot Configuration                      menu.

                                          ↔: Select Screen
                                          ↑↓: Select Item
                                          Enter: Select
                                          +/-: Change Opt.
                                          F1: General Help
                                          F2: Previsous Values
                                          F9: Optimized Defaults
                                          F10: Save & Exit
                                          ESC: Exit

Version 2.15.1226. Copyright (C) 2012 American Megatrends, Inc.
```

Figure 152: Boot

BIOS setting	Function	Configuration options	Effect
Boot device priority	Configures the boot order	Enter	Opens this submenu See "Boot device priority" on page 268.
Boot configuration	Configures boot properties	Enter	Opens this submenu See "Boot configuration" on page 269.

Table 232: Boot - Overview

1.5.1 Boot device priority

```
Aptio Setup Utility - Copyright (C) 2012 American Megatrends, Inc.
Boot

Boot Priority Selection          [Type Based]          Set boot priority
                                                       selection method.
Type Based Boot Priority                               Type Based: Determine boot
1st Boot Device                  [SATA 0 Drive]        priority by device type.
2nd Boot Device                  [SATA 1 Drive]        Device Bades: Determine
3rd Boot Device                  [SATA 2 Drive]        boot priority by specific
4th Boot Device                  [SATA 3 Drive]        device selection. Devices
5th Boot Device                  [USB Harddisk]        must be present, priority
6th Boot Device                  [USB CDROM]           will be changed if devices
7th Boot Device                  [Onboard LAN]         are removed or added.
8th Boot Device                  [Other BEV Device]
                                                       ↔: Select Screen
                                                       ↑↓: Select Item
                                                       Enter: Select
                                                       +/-: Change Opt.
                                                       F1: General Help
                                                       F2: Previsous Values
                                                       F9: Optimized Defaults
                                                       F10: Save & Exit
                                                       ESC: Exit

Version 2.15.1226. Copyright (C) 2012 American Megatrends, Inc.
```

Figure 153: Boot - Boot Device Priority

BIOS setting	Function	Configuration options	Effect
Boot priority selection	Option for determining the method for how drives should be booted	Device based	Only lists devices that are recognized by the system. The order of devices in this list can be changed. **Information:** **It is only possible to use either "Device based" or "Type based". Using both together is not permitted.**
		Type based	The boot sequence of a device type list can be changed. It is also possible to add device types that are not connected to this list. **Information:** **It is only possible to use either "Device based" or "Type based". Using both together is not permitted.**
1st boot device	Option for selecting drives to be used for booting	Disabled, SATA 0 drive, SATA 1 drive, SATA 2 drive, SATA 3 drive, USB floppy, USB hard disk, USB CDROM, Onboard LAN, External LAN, Other BEV device	Specifies the desired boot sequence
2nd boot device			
3rd boot device			
4th boot device			
5th boot device			
6th boot device			
7th boot device			
8th boot device			

Table 233: Boot - Boot device priority - Configuration options

1.5.2 Boot configuration

```
Aptio Setup Utility - Copyright (C) 2012 American Megatrends, Inc.
Boot

Launch CSM                          [Enabled]
Boot option filter                  [UEFI and Legacy]
PXE Option ROM Launch Policy        [Do not launch]
Storage Option ROM Launch Policy    [Legacy ROM only]
Video Option ROM Launch Policy      [Legacy ROM only]
Other PCI device ROM priority       [Legacy OpROM]
Option ROM Messages                 [Force BIOS]

Boot Logo                           [Auto]
Enter Setup If No Boot Device       [No]
Setup Prompt Timeout                1
Enable Popup Boot Menu              [Yes]

Force POST/Setup VGA Support        [Disabled]

Bootup NumLock State                [On]
GateA20 Active                      [Upon Request]
INT19 Trap Response                 [Immediate]

Power Loss Control                  [Turn On]

Fast Boot                           [Disabled]

Controls the execution of
UEFI and legacy PXE option
ROMs

↔: Select Screen
↑↓: Select Item
Enter: Select
+/-: Change Opt.
F1: General Help
F2: Previsous Values
F9: Optimized Defaults
F10: Save & Exit
ESC: Exit

Version 2.15.1226. Copyright (C) 2012 American Megatrends, Inc.
```

Figure 154: Boot - Boot Configuration

BIOS setting	Function	Configuration options	Effect
Launch CSM	Option for enabling/disabling the CSM module	Enabled	Enables this function
		Disabled	Disables this function
Boot option filter	Option for controlling which device system should be booted	UEFI and legacy	Boots from UEFI and legacy
		UEFI only	Boots from UEFI
		Legacy only	Boots from legacy

Table 234: Boot - Boot configuration - Configuration options

BIOS setting	Function	Configuration options	Effect
PXE Option ROM launch policy	Option for booting from PXE Option ROM	Do not launch	Does not boot from PXE Option ROM
		UEFI ROM only	Boots from UEFI ROM
		Legacy ROM only	Boots from legacy ROM
Storage Option ROM launch policy	Option for booting from Storage Option ROM	Do not launch	Does not boot from Storage Option ROM
		UEFI ROM only	Boots from UEFI ROM
		Legacy ROM only	Boots from legacy ROM
Video Option ROM launch policy	Option for booting from Video Option ROM	Do not launch	Does not boot from Video Option ROM
		UEFI ROM only	Boots from UEFI ROM
		Legacy ROM only	Boots from legacy ROM
Other PCI device ROM priority	Option for configuring which OpROM should be booted if not network, mass storage or video	UEFI opROM	Boots from UEFI OpROM
		Legacy OpROM	Boots from legacy OpROM
Option ROM messages	Option to display Option ROM messages during POST	Force BIOS	Displays Option ROM messages during POST
		Keep current	Does not display Option ROM messages during POST
Boot logo	Option for configuring the boot logo	Disabled	Does not display the boot logo
		Enabled	Displays the boot logo
		Auto	Displays the boot logo
Enter setup if no boot device	Option for configuring whether the setup screen is displayed when no bootable drive is connected	No	Does not display the setup screen
		Yes	Displays the setup screen
Setup prompt timeout	Option for configuring how long the setup activation key (key for entering BIOS) is displayed	1 to 65534	Displays the setup activation key for x seconds
		65535	Displays the setup activation key for an unlimited amount of time
Enable popup boot menu	Option for enabling/disabling the popup boot menu	Yes	Enables this function. Pressing "F11" during POST allows a boot device to be selected.
		No	Disables this function. It is not possible to select a boot device during POST. Devices will boot in their configured order.
Force POST/Setup VGA support	Option for enabling/disabling 640 x 480 VGA support in BIOS and POSt	Disabled	Disables this function
		Enabled	Enables this function
Bootup NumLock state	Option for configuring the numeric keypad when booting the system	On	Enables the numeric keypad
		Off	Only enables the cursor (movement) functions of the numeric keypad
GateA20 active	Option for defining how memory above 1 MB is accessed	Upon request	Allows GA20 to be disabled
		Always	Does not disable GA20
INT19 trap response	Option for configuring the interrupt trap response for the ROM option	Immediate	Executes the interrupt trap response immediately
		Postponed	Executes the interrupt trap response during the legacy boot
Power loss control	Specifies whether the system should be on/off following power loss	Remain off	Keeps the PC turned off
		Turn on	Turns on the PC
		Last state	Enables the previous state
Fast boot	Option for reducing the boot time by skipping some POST procedures	Enabled	Enables this option
		Disabled	Disables this option
SATA support	Function for configuring for which option SATA support should be implemented	Last boot HDD only	On the last boot of the hard drive
		All SATA devices	For all SATA devices
		HDD only	On the hard drive
VGA support	Function for configuring how VGA support should be implemented. If "Auto", legacy OpRom with the legacy OS is installed and the logo will not be displayed during POST. The EFI driver is installed with the EFI OS.	Auto	Automatic enabling
		EFI driver	Option handled by EFI driver
USB support	Enables/Disables USB support. USB interfaces do not function during startup. USB support is available again after the operating system has started. A USB keyboard is still recognized during POST.	Disabled	Disables this option
		Full initial	Enables the option's complete procedure
		Partial initial	Enables the option's partial procedure
PS2 devices support	Option for enabling/disabling PS2 device support	Enabled	Enables this option
		Disabled	Disables this option

Table 234: Boot - Boot configuration - Configuration options

1.6 Security

```
Aptio Setup Utility - Copyright (C) 2012 American Megatrends, Inc.
Main  Advanced  Boot  Security  Save & Exit

Password Description                          Set Administrator Password

If the Adminsitrator's password is set,
then this only limits access to Setup and is
only asked for when entering Setup.
The password lenght must be
in the following range:
Minimum length                    3
Maximum length                    20

Administrator Password                        ↔: Select Screen
                                              ↑↓: Select Item
HDD Security Configuration:                   Enter: Select
P0:WDC WD5000LU                               +/-: Change Opt.
P1:ST9250311CS                                F1: General Help
P2:WDC WD5000LU                               F2: Previsous Values
                                              F9: Optimized Defaults
                                              F10: Save & Exit
                                              ESC: Exit

Version 2.15.1226. Copyright (C) 2012 American Megatrends, Inc.
```

Figure 155: Security

BIOS setting	Function	Configuration options	Effect
Administrator password	Function for entering/changing the administrator password	Enter	Password entry

Table 235: Security menu - Configuration options

1.6.1 HDD user password

```
Aptio Setup Utility - Copyright (C) 2012 American Megatrends, Inc.
Security

HDD Password Description                      Set HDD User Password.
                                              *** Advisable to Power
Allows Access to Set, Modify and Clear        Cycle System after Setting
HardDisk User and Master Passwords.           Hard Disk Passwords ***
User Password need to be installed for
Enabling Security. Master Password can
be Modified only when successfully unlocked
with Master Password in POST.

HDD PASSWORD CONFIGURATION:

Security Supported        :       YES
Security Enabled          :       No
Security Locked           :       No
Security Frozen           :       No
HDD User Pwd Status               NOT INSTALLED
HDD Master Pwd Status             INSTALLED

Set User Password                             ↔: Select Screen
                                              ↑↓: Select Item
                                              Enter: Select
                                              +/-: Change Opt.
                                              F1: General Help
                                              F2: Previsous Values
                                              F9: Optimized Defaults
                                              F10: Save & Exit
                                              ESC: Exit

Version 2.15.1226. Copyright (C) 2012 American Megatrends, Inc.
```

Figure 156: Security - HDD user password

BIOS setting	Function	Configuration options	Effect
User password	Function for entering/changing a user password.	Enter	Password entry

Table 236: Security - HDD user password - Configuration options

1.7 Save & Exit

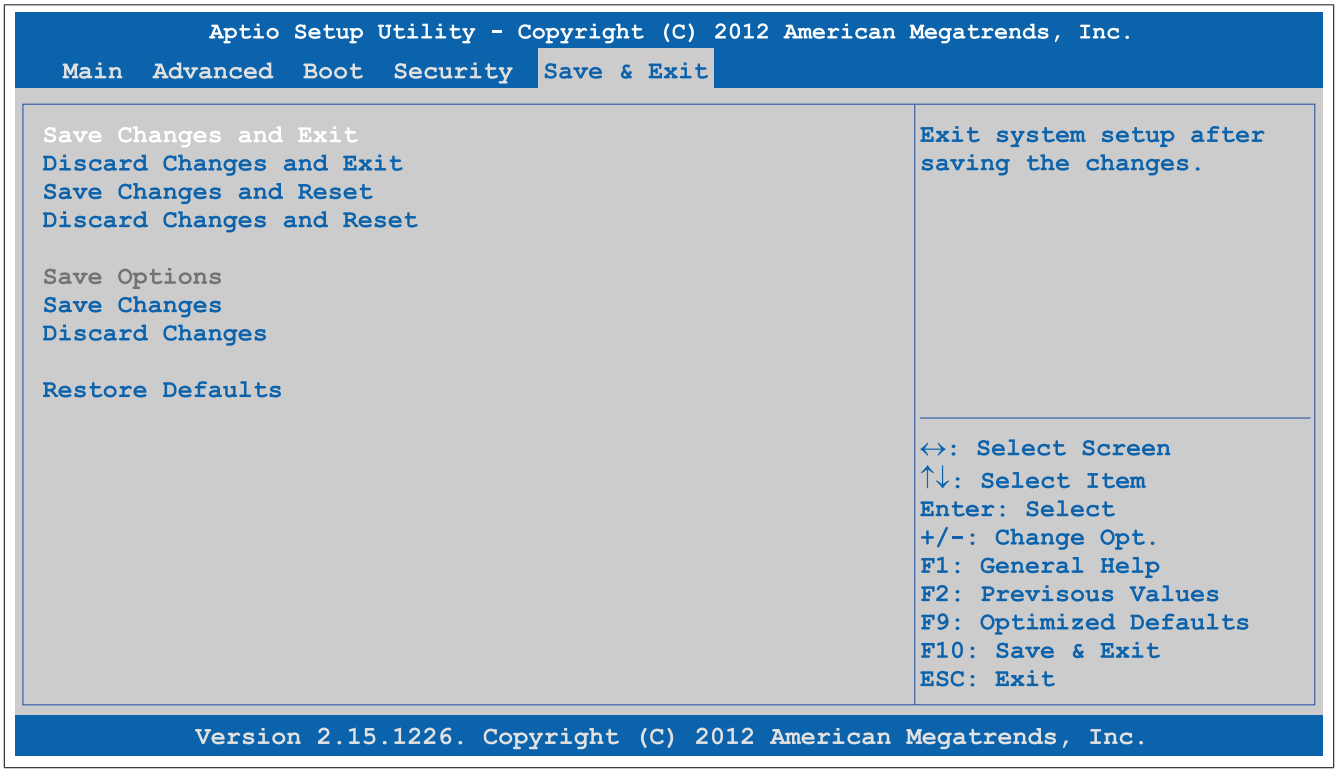

Figure 157: Save & Exit

BIOS setting	Function	Configuration options	Effect
Save changes and exit	Selecting this option closes BIOS Setup. Selecting this option saves any changes made to CMOS after confirmation.	Yes/No	
Discard changes and exit	Selecting this option closes BIOS Setup without saving any changes made.	Yes/No	
Save changes and reset	Selecting this option closes BIOS Setup. Selecting this option saves any changes made to CMOS after confirmation and reboots the system.	Yes/No	
Discard changes and reset	Selecting this option closes BIOS Setup without saving any changes made. The system is then rebooted.	Yes/No	
Save changes	Selecting this option saves any changes made to CMOS after confirmation.	Yes/No	
Discard changes	Selecting this option resets any settings that may have been made but forgotten in the meantime (provided they have not yet been saved).	Yes/No	
Restore defaults	Selecting this option restores the BIOS default values.	Yes/No	

Table 237: Save & Exit menu - Configuration options

1.8 BIOS default settings

BIOS default settings may vary depending on how the complete system is configured.

If the function "Restore defaults" is selected in the main BIOS Setup menu, or if "Save & Exit" is selected (or F9 is pressed) in the individual setup screens, the following BIOS settings are the optimized values that will be used.

1.8.1 Advanced

1.8.1.1 Graphics configuration

Setting/Option	Default profile	My setting
Primary display	Auto	
Internal graphics	Auto	
IGFX VBIOS version	-	
GTT size	2 MB	
Aperture size	256M	
DVMT pre-allocated	64M	
DVMT total gfx mem	256M	
Gfx low power mode	Disabled	
Graphics performance analyzers	Disabled	
Primary IGFX boot display	EFP2	
Secondary IGFX boot display	CRT	
Active LFP configuration	No local flat panel	
Display port B interface	DisplayPort	
Display Port C interface	Disabled	
Display Port D interface	HDMI/DVI	
Display mode persistence	Disabled	

Table 238: Advanced - Graphics configuration - Overview of profile settings

1.8.1.2 OEM features

Setting/Option	Default profile	My setting
Main BIOS version	-	
OEM BIOS version	-	
MTCX	-	
ETH2 MAC address	-	
Realtime environment	Disabled	

Table 239: Advanced - OEM features - Overview of profile settings

1.8.1.2.1 Super I/O configuration

Setting/Option	Default profile	My setting
Serial port A	Enabled	
Device settings	-	
Serial port C	Enabled	
Device settings	-	

Table 240: Advanced - OEM features - Super I/O configuration - Overview of profile settings

1.8.1.3 PCI configuration

Setting/Option	Default profile	My setting
Above 4G decoding	Disabled	
PCI latency timer	32 PCI bus clocks	
VGA palette snoop	Disabled	
PERR# generation	Disabled	
SERR# generation	Disabled	
PCIE POST delay	Disabled	
PIRQ routing & IRQ reservation		
PIRQA	Auto	
PIRQB	Auto	
PIRQC	Auto	
PIRQD	Auto	
PIRQE	Auto	
PIRQF	Auto	
PIRQG	Auto	
PIRQH	Auto	
Reserve legacy interrupt 1	None	
Reserve legacy interrupt 2	None	

Table 241: Advanced - PCI configuration - Overview of profile settings

1.8.1.4 PCI express configuration

1.8.1.4.1 PCI Express settings

Setting/Option	Default profile	My setting
Relaxed ordering	Disabled	
Extended tag	Disabled	
No snoop	Enabled	
Maximum payload	Auto	
Maximum read request	Auto	
Extended synch	Disabled	
Link training retry	5	
Link training timeout (µS)	100	
Unpopulated links	Keep link on	
Restore PCIE registers	Disabled	

Table 242: Advanced - PCI Express configuration - PCI Express settings - Overview of profile settings

1.8.1.4.2 PCI Express GEN 2 settings

Setting/Option	Default profile	My setting
Completion timeout	Default	
ARI forwarding	Disabled	
AtomicOp requester enable	Disabled	
AtomicOp egress blocking	Disabled	
IDO request enable	Disabled	
IDO completion enable	Disabled	
LTR mechanism enable	Disabled	
End-End TLP prefix blocking	Disabled	
Target link speed	Auto	
Clock power management	Disabled	
Compliance SOS	Disabled	
Hardware autonomous width	Enabled	
Hardware autonomous speed	Enabled	

Table 243: Advanced - PCI Express configuration - PCI Express GEN 2 settings - Overview of profile settings

1.8.1.4.3 PCI Express graphics (PEG) port

Setting/Option	Default profile	My setting
PCI Express graphics (PEG) port	Auto	
PEG root port configuration	1 x 8 + 2 x 4	
PEG0	-	
PEG0 speed	Auto	
PEG0 ASPM	Disabled	
PEG1	-	
PEG1 speed	Gen1	
PEG1 ASPM	Disabled	
PEG2	-	
PEG2 speed	Auto	
PEG2 ASPM	Disabled	
Detect non-compliant device	Disabled	
De-emphasis control	-3.5 dB	

Table 244: Advanced - PCI Express configuration - PCI Express graphics (PEG) port - Overview of profile settings

1.8.1.4.4 PCI Express root port

Setting/Option	Default profile	My setting
PCI Express root port x	Enabled	
ASPM	Disabled	
URR	Disabled	
FER	Disabled	
NFER	Disabled	
CER	Disabled	
CT0	Disabled	
SEFE	Disabled	
SENFE	Disabled	
SECE	Disabled	
PME SCI	Enabled	
Always enable port	Disabled	
PCIe speed	Auto	
Assign INT to root port	Enabled	

Table 245: Advanced - PCI Express configuration - PCI Express root port - Overview of profile settings

Setting/Option	Default profile	My setting
Extra bus reserved	0	
Reserved memory	10	
Prefetchable memory	10	
Reserved I/O	4	

Table 245: Advanced - PCI Express configuration - PCI Express root port - Overview of profile settings

1.8.1.5 ACPI settings

Setting/Option	Default profile	My setting
Enable hibernation	Enabled	
ACPI sleep state	Both S1 and S3 available for OS to choose from	
Lock legacy resources	Disabled	
S3 video repost	Disabled	
Critical trip point	111 C	

Table 246: Advanced - ACPI settings - Overview of profile settings

1.8.1.6 RTC wake settings

Setting/Option	Default profile	My setting
Wake system at fixed time	Disabled	

Table 247: Advanced - RTC wake settings - Overview of profile settings

1.8.1.7 CPU configuration

Setting/Option	Default profile	My setting
Hyper-threading	Enabled	
Active processor cores	All	
Limit CPUID maximum	Disabled	
Execute disable bit	Enabled	
Intel virtualization technology	Disabled	
Hardware prefetcher	Enabled	
Adjacent cache line prefetch	Enabled	
TCC activation offset	0	
Primary plane current value	0	
Secondary plane current value	0	
EIST	Enabled	
Turbo mode	Enabled	
P state reduction	Disabled	
CPU C3 report	Disabled	
CPU C6 report	Disabled	
CPU C7 report	Disabled	
Configurable TDP	TDP NOMINAL	
Config TDP LOCK	Disabled	
Long duration power limit	0	
Long duration maintained	1	
Short duration power limit	0	
ACPI T state	Disabled	

Table 248: Advanced - CPU configuration - Overview of profile settings

1.8.1.8 Chipset configuration

Setting/Option	Default profile	My setting
PCH LAN controller	Enabled	
Wake on LAN	Enabled	
Azalia	Auto	
Azalia PME	Disabled	
Azalia internal HDMI codec	Disabled	
High-precision timer	Enabled	
CF9h global reset	Host only	
VT-d	Enabled	
PCI Express clock gating	Disabled	
DMI link ASPM PCH side	Disabled	
PCIe USB glitch W/A	Disabled	
SB CRID	Disabled	
NB CRID	Disabled	
Disconnect external SMBus	Never	
DMI Configuration	-	
DMI	-	

Table 249: Advanced - Chipset configuration - Overview of profile settings

Setting/Option	Default profile	My setting
DMI Vc1 control	Enabled	
DMI Vcp control	Enabled	
DMI Vcm control	Enabled	
DMI link ASPM CPU side	Disabled	
DMI extended synch control	Disabled	
DMI Gen 2	Auto	

Table 249: Advanced - Chipset configuration - Overview of profile settings

1.8.1.9 SATA configuration

Setting/Option	Default profile	My setting
SATA controller(s)	Enabled	
SATA mode selection	AHCI	
SATA test mode	Disabled	
Aggressive LPM support	Disabled	
SATA controller speed	Default	
SMART self test	Disabled	
Alternate ID	Disabled	
Serial ATA port 0	-	
Port 0	Enabled	
Hot plug	Disabled	
External SATA	Disabled	
SATA device type	Hard disk drive	
Spin up device	Disabled	
Serial ATA port 1	-	
Port 1	Enabled	
Hot plug	Disabled	
External SATA	Disabled	
SATA device type	Hard disk drive	
Spin up device	Disabled	
Serial ATA port 2	-	
Port 2	Enabled	
Hot plug	Disabled	
External SATA	Disabled	
Spin up device	Disabled	
Serial ATA port 3	-	
Port 3	Enabled	
Hot plug	Disabled	
External SATA	Disabled	
Spin up device	Disabled	
Software feature mask configuration		
RAID0	Enabled	
RAID1	Enabled	
RAID10	Enabled	
RAID5	Enabled	
Intel Rapid Recovery technology	Enabled	
OROM UI and BANNER	Enabled	
HDD unlock	Enabled	
LED locate	Enabled	
IRRT only on eSATA	Enabled	
Smart Response technology	Enabled	
OROM UI delay	2 seconds	

Table 250: Advanced - SATA configuration - Overview of profile settings

1.8.1.10 Memory configuration

Setting/Option	Default profile	My setting
DIMM profile	Default DIMM profile	
Memory frequency limiter	Auto	
No fan memory frequency limiter	Enabled	
ECC support	Disabled	
Max TOLUD	Dynamic	
NMode support	Auto	
Memory scrambler	Enabled	
Memory refresh rate	Disabled	
MRC fast boot	Enabled	
Force cold reset	Enabled	
DIMM exit mode	Fast exit	
Power down mode	PPD	
Scrambler seed generation off	Disabled	

Table 251: Advanced - Memory configuration - Overview of profile settings

Setting/Option	Default profile	My setting
Memory remap	Enabled	
Memory alias check	Disabled	
Channel A DIMM control	Enable both DIMMS	
Channel B DIMM control	Enable both DIMMS	

Table 251: Advanced - Memory configuration - Overview of profile settings

1.8.1.11 USB configuration

Setting/Option	Default profile	My setting
EHCI1 (ports 0-5)	Enabled	
EHC2 (ports 6-7)	Enabled	
xHCI mode	Auto	
HS port #1 switchable	Enabled	
HS port #2 switchable	Enabled	
HS port #3 switchable	Enabled	
HS port #4 switchable	Enabled	
Legacy USB support	Enabled	
XHCI legacy support	Enabled	
XHCI Hand-off	Enabled	
EHCI hand-off	Disabled	
USB mass storage driver support	Enabled	
USB transfer time-out	20 sec	
Device reset time-out	20 sec	
Device power-up delay	Auto	
Overcurrent protection	Disabled	
Per port USB disable control		
USB port #0	Enabled	
USB port #1	Enabled	
USB port #2	Enabled	
USB port #3	Enabled	
USB port #4	Enabled	
USB port #5	Enabled	
USB port #6	Enabled	
USB port #7	Enabled	
Per port legacy USB support control		
USB0 port legacy support	Enabled	
USB1 port legacy support	Enabled	
USB2 port legacy support	Enabled	
USB3 port legacy support	Enabled	
USB4 port legacy support	Enabled	
USB5 port legacy support	Enabled	
USB6 port legacy support	Enabled	
USB7 port legacy support	Enabled	

Table 252: Advanced - USB configuration - Overview of profile settings

1.8.1.12 Serial port console redirection

Setting/Option	Default profile	My setting
Console redirection	Disabled	

Table 253: Advanced - Serial port console redirection - Overview of profile settings

1.8.2 Boot

1.8.2.1 Boot device priority

Setting/Option	Default profile	My setting
Boot priority selection	Type based	
1st boot device	SATA 0 drive	
2nd boot device	SATA 1 drive	
3rd boot device	SATA 2 drive	
4th boot device	SATA 3 drive	
5th boot device	USB hard disk	
6th boot device	USB CDROM	
7th boot device	Onboard LAN	
8th boot device	Other BEV device	

Table 254: Boot - Boot device priority - Overview of profile settings

1.8.2.2 Boot configuration

Setting/Option	Default profile	My setting
Launch CSM	Enabled	
Boot option filter	UEFI and legacy	
PXE Option ROM launch policy	Do not launch	
Storage Option ROM launch policy	Legacy ROM only	
Video Option ROM launch policy	Legacy ROM only	
Other PCI devices ROM priority	Legacy OpROM	
Option ROM messages	Force BIOS	
Boot logo	Auto	
Enter setup if no boot device	No	
Force POST/Setup VGA support	Disabled	
Setup prompt timeout	1	
Enable popup boot menu	Yes	
Bootup NumLock state	On	
GateA20 active	Upon request	
INT19 trap response	Immediate	
Power loss control	Turn on	
Fast boot	Disabled	

Table 255: Boot - Boot configuration - Overview of profile settings

1.9 Allocation of resources

1.9.1 RAM address assignments

RAM address	Address in hexadecimal	Resource
(TOM - xxxx) – TOM[1)]	N.A.	ACPI reclaim, PCI memory range, video
1024 kB – (TOM - xxxx)	100000 - N.A.	Extended memory
869 kB – 1024 kB	0E0000h - 0FFFFFh	Runtime BIOS
768 kB – 896 kB	0C0000h - 0DFFFFh	Expansion area
640 kB – 768 kB	0A0000h - 0BFFFFh	Video memory and BIOS
639 kB – 640 kB	09FC00h - 09FFFFh	Extended BIOS data
0 – 639 kB	000000h - 09FC00h	Conventional memory

Table 256: RAM address assignments

1) TOM = Top of memory: max. installed DRAM.

1.9.2 I/O address assignments

I/O address	Resource
0000h - 00FFh	Motherboard resources
0170h - 0177h	Secondary IDE channel
01F0h - 01F7h	Primary IDE channel
0228h - 022Fh	COM F (IF option 2)
02E8h - 02EFh	COM E (IF option 1)
02F8h - 02FFh	COM B (SDL link module)
0376h - 0376h	Secondary IDE channel command port
0377h - 0377h	Secondary IDE channel status port
0384h - 0385h	CAN controller
03B0h - 03DFh	Video system
03E8h - 03EFh	COM C (onboard SDL)
03F6h - 03F6h	Primary IDE channel command port
03F7h - 03F7h	Primary IDE channel status port
03F8h - 03FFh	COM A (COM1)
0400h - 047Fh	Motherboard resources
0500h - 057Fh	Motherboard resources
0CF8h - 0CFBh	PCI config address register
0CFCh - 0CFFh	PCI config data register
0D00h - FFFFh	PCI / PCI Express bus
4100h - 417Fh	MTCX
FF00h - FF07h	IDE bus master register

Table 257: I/O address assignments

1.9.3 Interrupt assignments in PIC mode

IRQ		0	1	2	3	4	5	6	7	8	9	10	11	12	13	14	15	NONE
System timer		●																
Keyboard			●															
IRQ cascade				●														
COM A (COM1)					○	●	○	○	○			○	○	○				
ACPI[1)]											●							
Real-time clock										●								
Co-processor (FPU)															●			
Primary IDE channel																●		
Secondary IDE channel																	●	
B&R	COM B (monitor/panel option / SDL Link module)				●	○	○	○	○			○	○	○				
	COM C (onboard SDL)				○	○	○	○	○			○	●	○				
	COM E (IF option 1 / I/O board 1)				○	○	○	○	○			●	○	○				
	COM F (IF option 2 / I/O board 2)				○	○	○	○	●			○	○	○				
	CAN				○	○	○	○	○			●	○	○				

Table 258: IRQ interrupt assignments in PIC mode

1) **A**dvanced **C**onfiguration and **P**ower **I**nterface.

● ... Default setting
○ ... Optional setting

1.9.4 Interrupt assignments in APIC mode

A total of 23 IRQs are available in APIC (**A**dvanced **P**rogrammable **I**nterrupt **C**ontroller) mode. Enabling this option is only effective if done before the Windows operating system is installed.

IRQ		0	1	2	3	4	5	6	7	8	9	10	11	12	13	14	15	16	17	18	19	20	21	22	23	NONE
System timer		●																								
Keyboard			●																							
IRQ cascade				●																						
COM A (COM1)					○	●	○	○	○			○	○	○												
ACPI[1]											●															
Real-time clock										●																
Co-processor (FPU)															●											
Primary IDE channel																●										
Secondary IDE channel																	●									
B&R	COM B (Monitor/Panel option)				●	○	○	○	○			○	○	○												
	COM C (onboard SDL)				○	○	○	○	○			○	●	○												
	COM E (IF option 1)				○	○	○	○	○			●	○	○												
	COM F (IF option 2)				○	○	○	○	●			○	○	○												
	CAN				○	○	○	○	○			●	○	○												
	POWERLINK (IF option 2)																			●						
PIRQ A[2]																		●								
PIRQ B[3]																			●							
PIRQ C[4]																				●						
PIRQ D[5]																					●					
PIRQ E[6]																						●				
PIRQ F[7]																							●			
PIRQ G[8]																								●		
PIRQ H[9]																									●	

Table 259: IRQ interrupt assignments in APIC mode

1) **A**dvanced **C**onfiguration and **P**ower **I**nterface.
2) PIRQ A: For PCIe; PEG 0/1/2, PCI Express root port 0, VGA controller, PCI Express root port 4 (ETH2).
3) PIRQ B: For PCIe; PCI Express root port 1, PCI Express root port 5.
4) PIRQ C: For PCIe; PCI Express root port 2, SRAM, POWERLINK
5) PIRQ D: For PCIe; PCI Express root port 3, PCIe to PCI bridge.
6) PIRQ E: For PCIe; onboard gigabit LAN controller (ETH1).
7) PIRQ F: For PCIe; EHCI host controller 2, serial ATA controller 1, serial ATA controller 2.
8) PIRQ G: For PCIe; Intel High Definition Audio controller, SMBus controller.
9) PIRQ H: For PCIe; EHCI host controller 1, XHCI host controller.

● ... Default setting
○ ... Optional setting

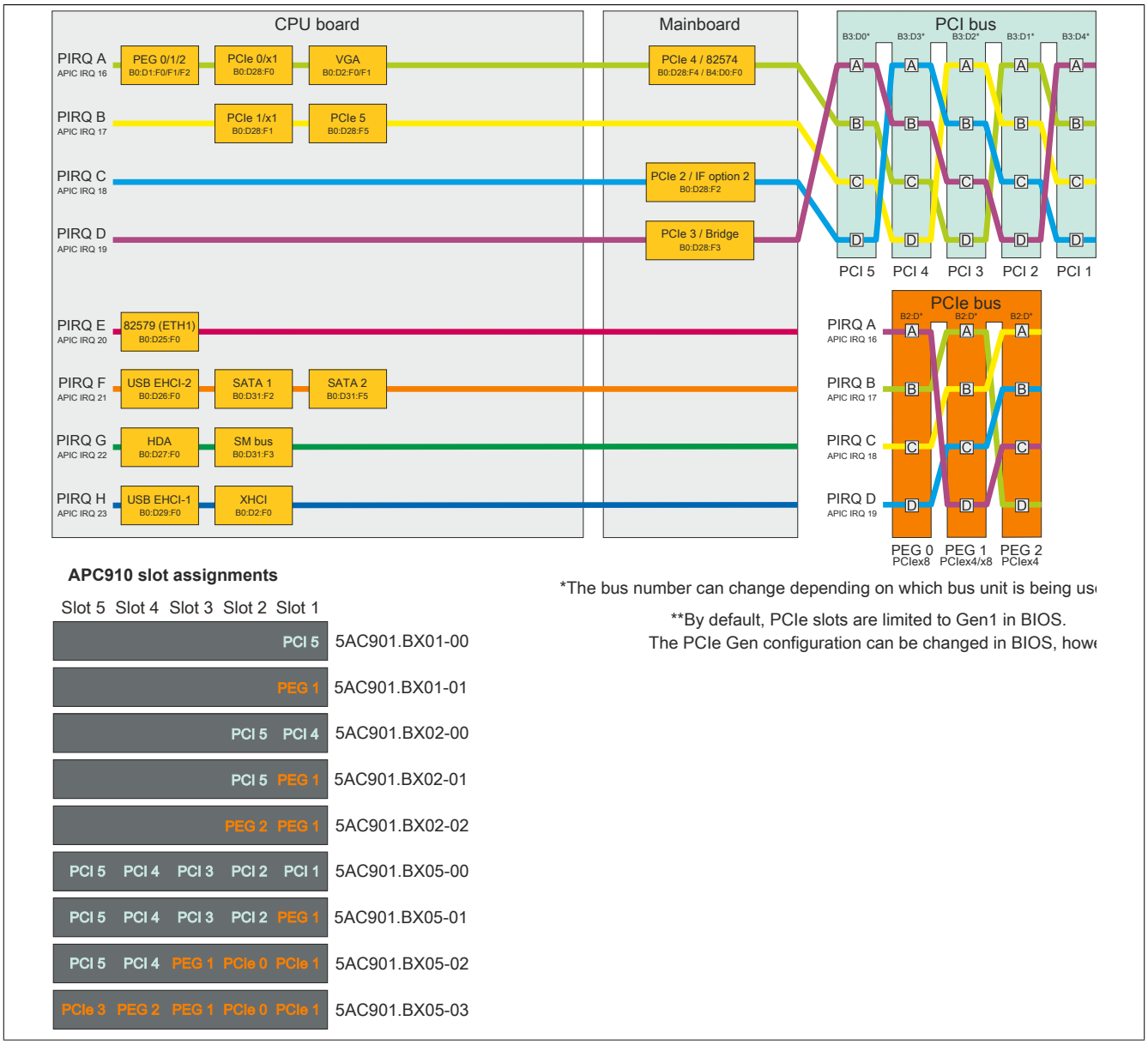

Figure 158: PCI and PCIe routing with enabled APIC for QM77/HM76 CPU boards

2 Upgrade information

> **Warning!**
>
> **The BIOS and firmware on B&R devices must be kept current. New versions can be downloaded from the B&R website (www.br-automation.com).**

2.1 BIOS upgrade

An upgrade may be necessary in order to accomplish the following:

- Updating implemented functions or adding newly implemented functions or components to BIOS Setup (information about changes can be found in the Readme file for the BIOS upgrade).

2.1.1 Important information

> **Information:**
>
> **Customized BIOS settings are deleted when upgrading BIOS.**

Before starting an upgrade, it helps to determine the various software versions.

2.1.1.1 Which BIOS version and firmware are already installed?

This information can be found on the following BIOS Setup screen:

- After switching on the APC910, BIOS Setup can be accessed by pressing <Del>.
- After switching on the PPC900, BIOS Setup can be accessed by pressing <Del>.
- From the "Advanced" menu in BIOS, select "OEM features".

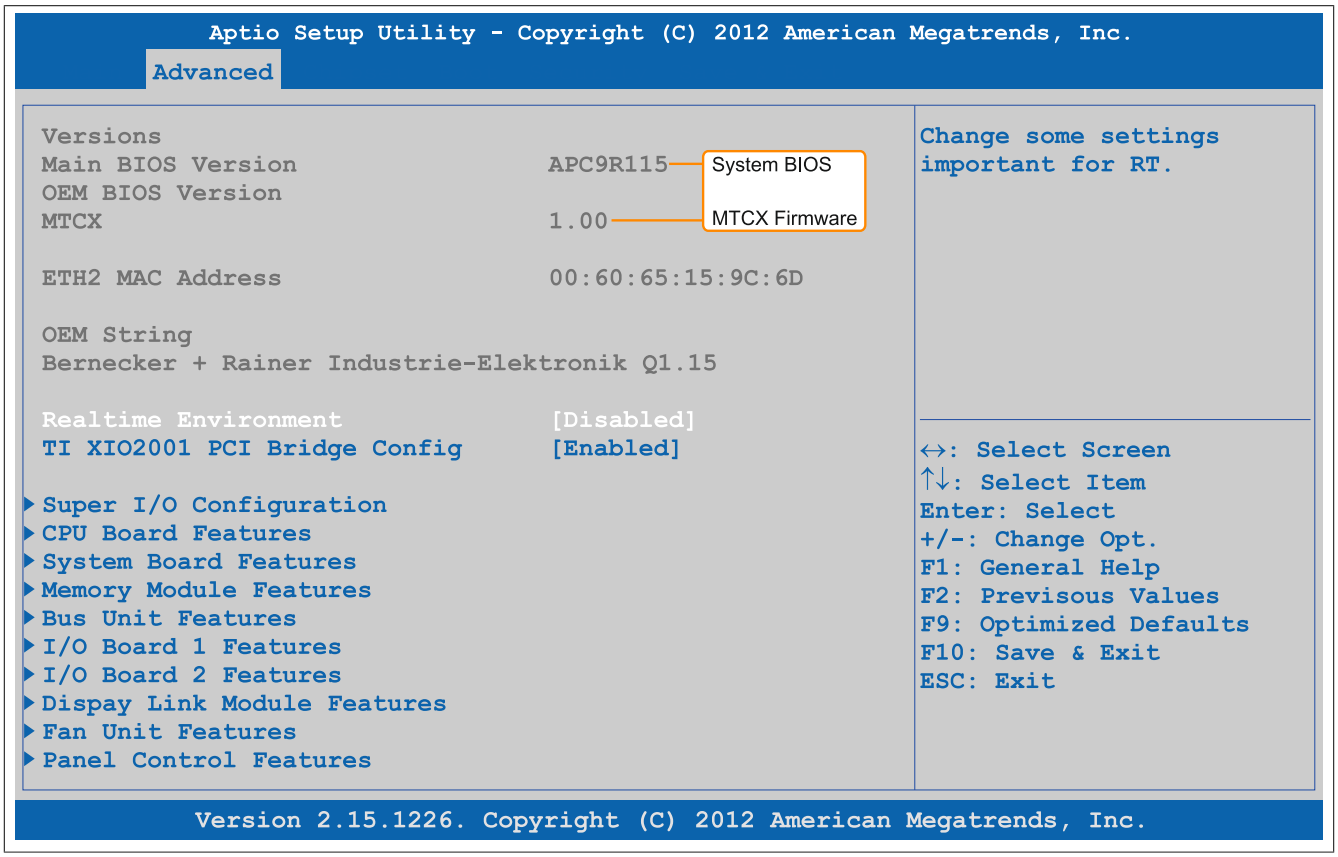

Figure 159: Software version

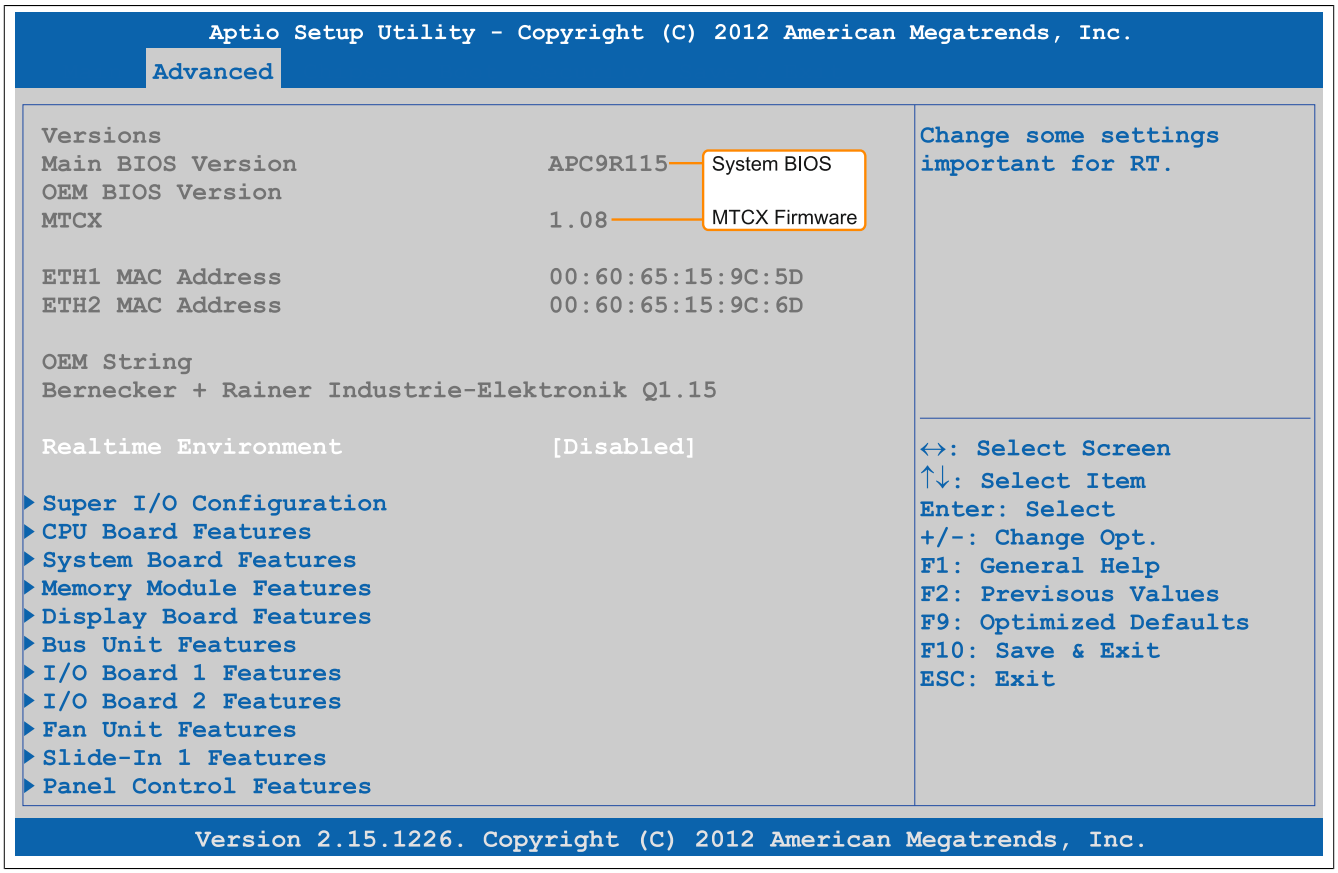

Figure 160: Software version

2.1.2 Procedure with MS-DOS

Caution!

Do not switch off or reset the system during an upgrade under any circumstances!

1. Download the .zip file from the B&R website (www.br-automation.com).
2. Create bootable media.

Information:

In MS-DOS, Win95 and Win98, a blank HD disk can be made bootable by typing "sys a:" or "format a: /s" on the command line.
Information about creating a bootable diskette in Windows XP can be found on page 286.

Information about creating a USB flash drive for a B&R upgrade can be found on page 288.

Information about creating a storage device for a B&R upgrade can be found on page 289.

3. Copy the contents of the .zip file to the bootable media. If the B&R upgrade was already added when creating the bootable media with the B&R Embedded OS Installer, then this step is not necessary.
4. Connect the bootable media to the B&R device and reboot.
5. The following boot menu will be shown after startup:

```
1. Upgrade AMI BIOS for APC910/PPC900 (QM77 bzw. HM76)
2. Exit
```

Option 1:
Automatically upgrades BIOS (default after 5 seconds)

Option 2:
Returns to the shell (MS-DOS)

Information:

If a key is not pressed within 5 seconds, then option 1 is automatically carried out to update the industrial PC.

6. The system must be rebooted after a successful upgrade.
7. Reboot and press <Del> to enter BIOS Setup and load the setup defaults, then select "Save changes and exit".

2.2 Firmware upgrade

Caution!

Do not switch off or reset the system during an upgrade under any circumstances!

The "Firmware upgrade (MTCX, SDLR, AP830, AP9x3)" software makes it possible to update the firmware for multiple controllers (MTCX, SDLR, AP830, AP9x3) depending on the APC910 system variant.

The "Firmware upgrade (MTCX, SDLR, AP830, AP9x3)" software makes it possible to update the firmware for multiple controllers (MTCX, SDLR, AP830, AP9x3) depending on the PPC900 system variant.

The latest firmware upgrade is available in the Downloads section of the B&R website (www.br-automation.com).

2.2.1 Procedure in Windows (B&R Control Center)

1. Download the .zip file from the B&R website (www.br-automation.com).
2. Open the **Control Center** in the Control Panel.
3. Select the **Versions** tab.
4. Under **CPU board**, click **Update** for **MTCX** or **MTCX FPGA**. This brings up the "Open" dialog box.
5. Under "System unit", click on **Update** for **MTCX**. This brings up the "Open" dialog box.
6. Enter the name of the firmware file or select the file under **Filename**.
7. Click on **Open**. This brings up the "Open" dialog box.

The transfer can be canceled by clicking on **Cancel**. **Cancel** is disabled when writing to flash memory.

Warning!

Do not press any panel keys while the firmware is being transferred! This can disrupt the procedure.

Deleting the data in flash memory can take several seconds depending on the memory block being used. The progress indicator is not updated during this time.

Information:

The PC's power supply must be switched off and then switched back on again in order for the new firmware to take effect and the updated version to be displayed. The user is prompted to do this when closing the Control Center.

Information:

For more information about saving and updating firmware, please refer to the help documentation for the Control Center.

2.3 Creating an MS-DOS boot diskette in Windows XP

1. Insert a blank 1.44 MB HD diskette into the disk drive.
2. Open Windows Explorer.
3. Right-click on the 3½ floppy diskette icon and select "Format".

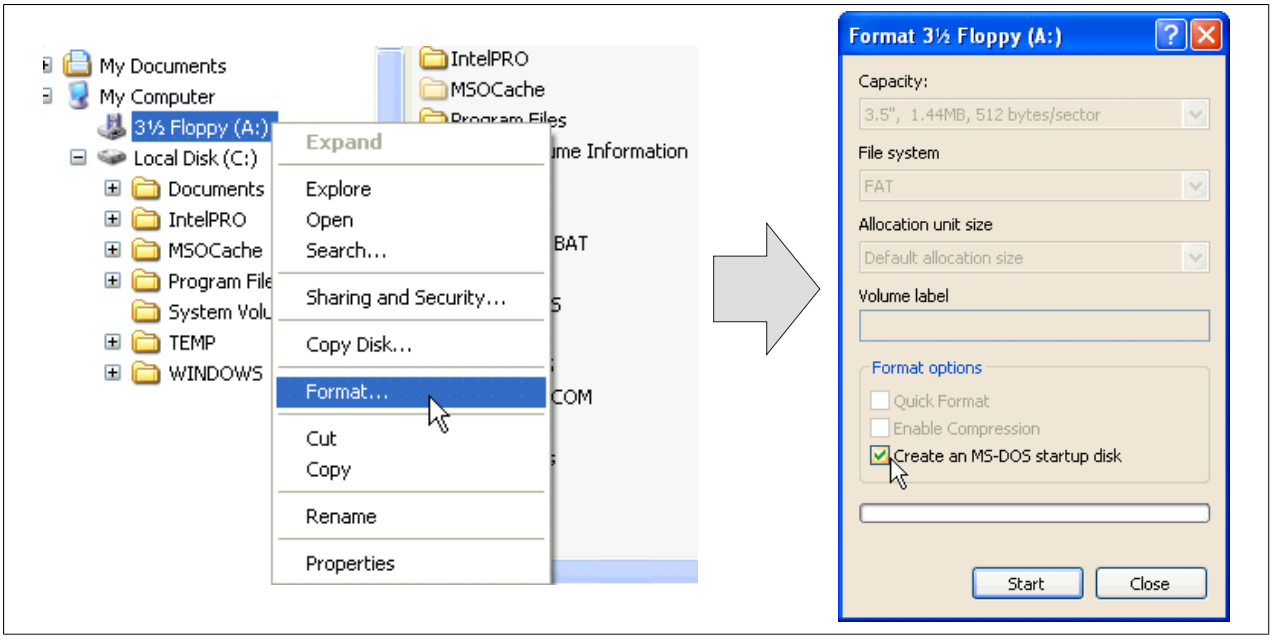

Figure 161: Creating a bootable diskette in Windows XP - Step 1

4. Select the **"Create an MS-DOS startup disk"** option, click on **"Start"** and acknowledge the warning message with "OK".

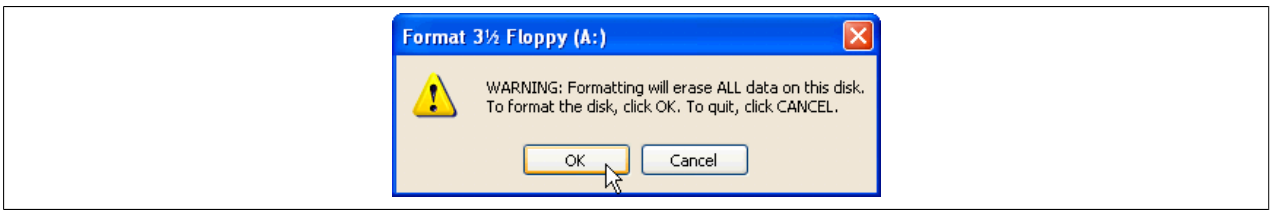

Figure 162: Creating a bootable diskette in Windows XP - Step 2

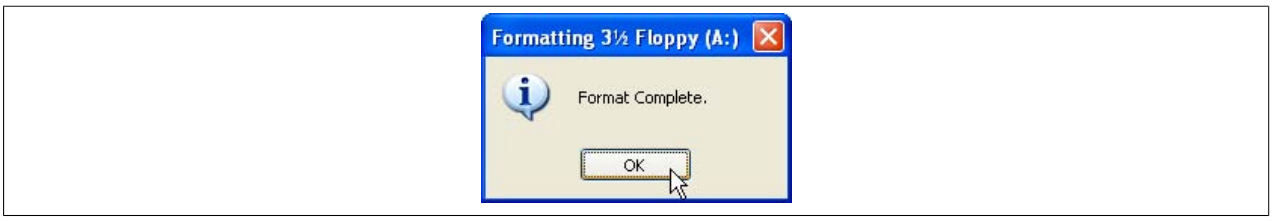

Figure 163: Creating a bootable diskette in Windows XP - Step 3

After creating the startup disk, some of the files must be deleted because of the size of the update.

To do this, all files (hidden system files, etc.) must be visible on the diskette.

In Windows Explorer, go to the "Tools" menu, select "Folder options" and open the "View" tab. Then deselect the option "Hide protected operating system files (Recommended)" (enabled by default) and enable the option "Show hidden files and folders".

before

Name	Size	Type	Date Modified
DISPLAY.SYS	17 KB	System file	6/8/2000 5:00 PM
EGA2.CPI	58 KB	CPI File	6/8/2000 5:00 PM
EGA3.CPI	58 KB	CPI File	6/8/2000 5:00 PM
EGA.CPI	58 KB	CPI File	6/8/2000 5:00 PM
KEYB.COM	22 KB	MS-DOS Application	6/8/2000 5:00 PM
KEYBOARD.SYS	34 KB	System file	6/8/2000 5:00 PM
KEYBRD2.SYS	32 KB	System file	6/8/2000 5:00 PM
KEYBRD3.SYS	31 KB	System file	6/8/2000 5:00 PM
KEYBRD4.SYS	13 KB	System file	6/8/2000 5:00 PM
MODE.COM	29 KB	MS-DOS Application	6/8/2000 5:00 PM

after

Name	Size	Type	Date Modified
AUTOEXEC.BAT	0 KB	MS-DOS Batch File	3/22/2006 10:08 AM
COMMAND.COM	91 KB	MS-DOS Application	6/8/2000 5:00 PM
CONFIG.SYS	0 KB	System file	3/22/2006 10:08 AM
DISPLAY.SYS	17 KB	System file	6/8/2000 5:00 PM
EGA2.CPI	58 KB	CPI File	6/8/2000 5:00 PM
EGA3.CPI	58 KB	CPI File	6/8/2000 5:00 PM
EGA.CPI	58 KB	CPI File	6/8/2000 5:00 PM
IO.SYS	114 KB	System file	5/15/2001 6:57 PM
KEYB.COM	22 KB	MS-DOS Application	6/8/2000 5:00 PM
KEYBOARD.SYS	34 KB	System file	6/8/2000 5:00 PM
KEYBRD2.SYS	32 KB	System file	6/8/2000 5:00 PM
KEYBRD3.SYS	31 KB	System file	6/8/2000 5:00 PM
KEYBRD4.SYS	13 KB	System file	6/8/2000 5:00 PM
MODE.COM	29 KB	MS-DOS Application	6/8/2000 5:00 PM
MSDOS.SYS	1 KB	System file	4/7/2001 1:40 PM

Figure 164: Creating a bootable diskette in Windows XP - Step 4

Name	Size	Type	Date Modified
AUTOEXEC.BAT	0 KB	MS-DOS Batch File	3/22/2006 10:08 AM
COMMAND.COM	91 KB	MS-DOS Application	6/8/2000 5:00 PM
CONFIG.SYS	0 KB	System file	3/22/2006 10:08 AM
DISPLAY.SYS	17 KB	System file	6/8/2000 5:00 PM
EGA2.CPI	58 KB	CPI File	6/8/2000 5:00 PM
EGA3.CPI	58 KB	CPI File	6/8/2000 5:00 PM
EGA.CPI	58 KB	CPI File	6/8/2000 5:00 PM
IO.SYS	114 KB	System file	5/15/2001 6:57 PM
KEYB.COM	22 KB	MS-DOS Application	6/8/2000 5:00 PM
KEYBOARD.SYS	34 KB	System file	6/8/2000 5:00 PM
KEYBRD2.SYS	32 KB	System file	6/8/2000 5:00 PM
KEYBRD3.SYS	31 KB	System file	6/8/2000 5:00 PM
KEYBRD4.SYS	13 KB	System file	6/8/2000 5:00 PM
MODE.COM	29 KB	MS-DOS Application	6/8/2000 5:00 PM
MSDOS.SYS	1 KB	System file	4/7/2001 1:40 PM

Figure 165: Creating a bootable diskette in Windows XP - Step 5

Now all files (selected) except Command.com, IO.sys and MSDOS.sys can be deleted.

2.4 Creating a bootable USB flash drive for B&R upgrade files

When used in connection with a B&R Industrial PC, it is possible to upgrade (e.g. BIOS) from one of the USB flash drives available from B&R. To do this, the USB flash drive must be prepared accordingly. This is done with the B&R Embedded OS Installer, which can be downloaded at no cost from the B&R website (www.br-automation.com).

2.4.1 Requirements

The following is required to create a bootable USB flash drive:

- B&R USB flash drive
- B&R Industrial PC
- USB media drive
- B&R Embedded OS Installer (V3.00 or higher)

2.4.2 Procedure

1. Connect the USB flash drive to the PC.
2. If the drive list is not refreshed automatically, update the list using the **Drives > Refresh** command.
3. Select the desired USB flash drive in the drive list.
4. Change to the **Action** tab and select **Install a B&R update to a USB flash drive** as the type of action.
5. Enter the path to the MS-DOS operating system files. If the files are part of a .zip archive, then click on the button **From .zip file**. If the files are stored in a directory on the hard drive, then click on the button **From folder**.
6. In the **B&R upgrade** text box, it is also possible to enter the path to the .zip file for the B&R upgrade disk and select the file.
7. Click on the **Start action** button in the toolbar.

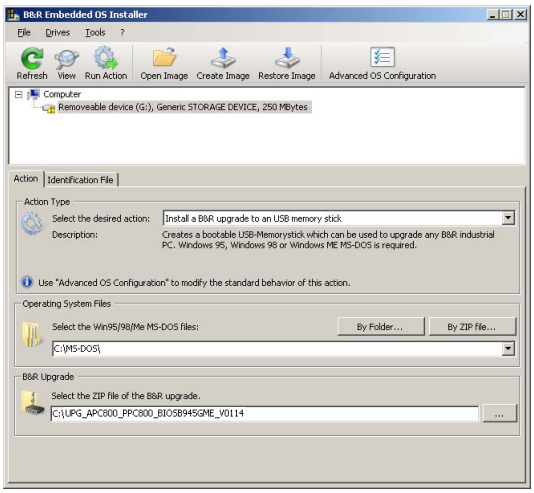

Figure 166: Creating a USB flash drive for B&R upgrade files

2.4.3 How to access MS-DOS

Information about creating an MS-DOS boot diskette can be found in section "Creating an MS-DOS boot diskette in Windows XP" on page 286. The files from the diskette are then copied to the hard drive.

2.5 Creating a bootable mass storage device for B&R upgrade files

When used in connection with a B&R Industrial PC, it is possible to upgrade (e.g. BIOS) from a mass storage device (e.g. CFast card) available from B&R. To do this, the mass storage device must be prepared accordingly. This is done with the B&R Embedded OS Installer, which can be downloaded at no cost from the B&R website (www.br-automation.com).

2.5.1 Requirements

The following is required to create a bootable mass storage device:

- B&R mass storage device (e.g. CFast card)
- PC with CFast slot
- B&R Embedded OS Installer (V3.00 or higher)

2.5.2 Procedure

1. Connect the storage device to the PC.
2. If the drive list is not refreshed automatically, update the list using the **Drives > Refresh** command.
3. Select the desired mass storage device from the list of drives.
4. Change to the **Action** tab and select **Install a B&R update to a mass storage device** as the type of action.
5. Enter the path to the MS-DOS operating system files. If the files are part of a .zip archive, then click on the button **From .zip file**. If the files are stored in a directory on the hard drive, then click on the button **From folder**.
6. In the **B&R upgrade** text box, it is also possible to enter the path to the .zip file for the B&R upgrade disk and select the file.
7. Click on the **Start action** button in the toolbar.

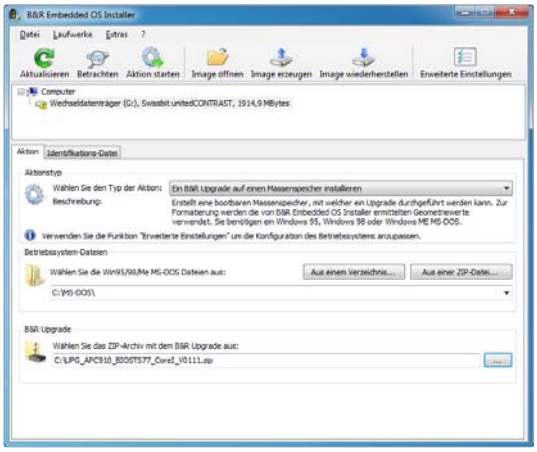

Figure 167: Creating a mass storage device for B&R upgrade files

2.5.3 How to access MS-DOS

Information about creating an MS-DOS boot diskette can be found in section "Creating an MS-DOS boot diskette in Windows XP" on page 286. The files from the diskette are then copied to the hard drive.

3 Windows 10 IoT Enterprise 2015 LTSB

3.1 General information

Windows 10 IoT Enterprise 2015 LTSB is the successor to Windows Embedded 8.1 Industry and based on new Windows 10 technology. This operating system also provides a high degree of protection for industrial applications with additional lockdown functions. Windows 10 IoT Enterprise 2015 LTSB is a version of Windows 10 Enterprise specifically developed for use in industrial applications (Long-Term Servicing Branch).

3.2 APC910 - Order data

Model number	Short description	Figure
	Windows 10 IoT Enterprise	
5SWW10.0240-MUL	Windows 10 IoT Enterprise 2015 LTSB - 64-bit - Multilingual - APC910 QM77/HM76 chipset - License (without Recovery DVD) - Only available with a new device	
	Optional accessories	
	Windows 10 IoT Enterprise	
5SWW10.0200-MUL	Windows 10 IoT Enterprise 2015 LTSB - 64-bit - Multilingual - Recovery DVD	
5SWW10.0400-MUL	Windows 10 IoT Enterprise 2015 LTSB - 64-bit - Multilingual DVD	

Table 260: 5SWW10.0240-MUL - Order data

3.3 Overview

Model number	Edition	Target system	Chipset	Architecture	Language	Minimum disk size	Minimum RAM required
5SWW10.0240-MUL	Embedded	APC910	QM77 HM76	64-bit	Multilingual	20 GB [1]	2 GB [2]

1) The memory used by additional language packs is not taken into account in the minimum size specified for the disk.
2) The specified size is the minimum requirement according to Microsoft. B&R recommends, however, using 4 GB or more of RAM with 64-bit operating systems.

3.4 Features with Windows 10 IoT Enterprise 2015 LTSB

The following list of features shows the most important device functions included in Windows 10 IoT Enterprise 2015 LTSB.

Function	Windows 10 IoT Enterprise 2015 LTSB
Range of functions in Windows 10 Enterprise 2015 LTSB	✓
Internet Explorer 11, including Enterprise Mode	✓
Multi-touch support	✓
Multilingual support	After installation using language pack DVDs (default language is English)
Page file	Configurable (switched off in image by default by UWF)
Hibernate file	Configurable (switched off in image by default)
System restore	Configurable (switched off in image by default by UWF)
SuperFetch	Configurable (switched off in image by default by UWF)
File indexing service	Configurable (switched off in image by default by UWF)
Fast boot	Configurable (switched off in image by default by UWF)
Defragmentation service	Configurable (switched off in image by default by UWF)
Additional embedded lockdown functions	
Assigned access	Configurable
AppLocker	Configurable
Shell launcher	Configurable
Unified Write Filter	✓

Table 261: Features with Windows 10 IoT Enterprise 2015 LTSB.

3.5 Installation

B&R preinstalls Windows 10 IoT Enterprise 2015 LTSB on a suitable data storage device (64-bit: minimum 20 GB). When switched on for the first time, the system runs through the OOBE (Out-of-Box Experience), which allows different settings to be made (e.g. language, region, keyboard layout, computer name, username, etc.).

3.6 Drivers

All drivers required for operation are preinstalled along with the operating system. If an older version of a driver is still being used, its latest version can be downloaded and installed from the B&R website (www.br-automation.com). It is important that Unified Write Filter (UWF) is disabled for this.

Information:

Required drivers must be downloaded from the B&R website only, not from manufacturer websites.

3.7 Activation

Like its predecessor (Windows Embedded 8.1 Industry Professional), Windows 10 IoT Enterprise 2015 LTSB must also be activated. This has already been done at B&R.

The status of the activation can be viewed in the Control Panel:

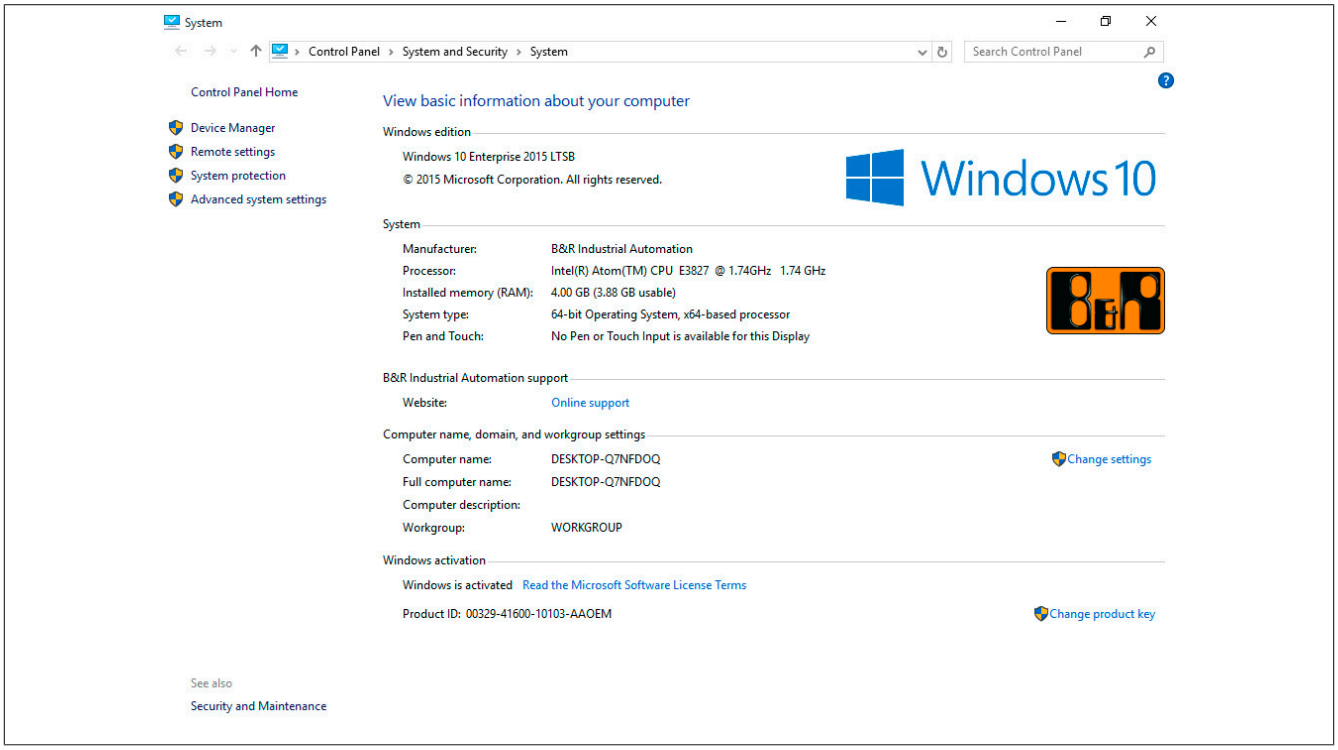

Information:

Activation can become negated when making changes to hardware (e.g. replacing components in repair situations) and when reinstalling the system (e.g. with the Recovery DVD).

In this case, a "watermark message" will always be shown on the screen:

Windows 10 IoT Enterprise 2015 LTSB does not carry out any restarts or show any pop-up messages, which means that it is fully functional at all times. Personalization is not possible, however (e.g. setting the desktop background).

The product can be activated at a later time either over the phone or via the Internet. Instructions for doing so can be found on in the Windows Control Panel under "Update & Security > Activation".

Information:

The product key never has to be entered for reactivation.

3.8 Contents of the Recovery DVD

The DVD with model number 5SWW10.0200-MUL is only for recovery purposes.

Information:

It is only used to carry out the basic installation of Windows 10 Enterprise 2015 LTSB. In contrast to the preinstalled operating system versions, the operating system does not include device-specific drivers (network, graphics, ADI, etc.) or optimized settings, nor is it activated! The product can be activated at a later time either over the phone or via the Internet (see "Activation").

3.9 Special considerations, limitations

- Unlike the standard Windows 10 Enterprise edition, Windows 10 IoT Enterprise 2015 LTSB does not include Cortana, the Microsoft Edge browser or the Microsoft Store.
- The LTSB version is based on Build 10240 of Windows 10 and does not contain any feature updates.

3.10 Supported display resolutions

In accordance with Microsoft requirements, Windows 10 IoT Enterprise 2015 LTSB requires SVGA resolution (800 x 600) or higher in order to allow unimpeded operation of the Windows user interface (including system dialog boxes and apps, etc.). A lower resolution can be selected for applications.

4 Windows Embedded 8.1 Industry Pro

4.1 General information

Windows Embedded 8.1 Industry Pro is an operating system specially tailored to industrial applications. Based on new Windows 8.1 technology, this edition offers full compatibility for applications and drivers while also integrating additional lockdown functions that make industrial PCs more secure.

4.2 Order data

Model number	Short description	Figure
	Windows Embedded 8.1 Industry Professional	
5SWWI8.0340-MUL	Windows Embedded 8.1 Industry Pro - 32-bit - Multilingual - For APC910 QM77/HM76 - License	
5SWWI8.0440-MUL	Windows Embedded 8.1 Industry Pro - 64-bit - Multilingual - For APC910 QM77/HM76 - License	
	Optional accessories	
	Windows Embedded 8.1 Industry Professional	
5SWWI8.0100-MUL	Windows Embedded 8.1 Industry Pro - 32-bit - Recovery DVD	
5SWWI8.0200-MUL	Windows Embedded 8.1 Industry Pro - 64-bit - Recovery DVD	
5SWWI8.0500-MUL	Windows Embedded 8.1 Industry Pro - 32-bit - Language Pack DVD	
5SWWI8.0600-MUL	Windows Embedded 8.1 Industry Pro - 64-bit - Language Pack DVD	

Table 262: 5SWWI8.0340-MUL, 5SWWI8.0440-MUL - Order data

4.3 Overview

Model number	Edition	Target system	Chipset	Architecture	Language	Minimum disk size	Minimum RAM required
5SWWI8.0340-MUL	Embedded	APC910	QM77 HM76	32-bit	Multilingual	16 GB [1]	1 GB [2]
5SWWI8.0440-MUL	Embedded	APC910	QM77 HM76	64-bit	Multilingual	20 GB [1]	2 GB [3]

1) The memory used by additional language packs is not taken into account in the minimum size specified for the disk.
2) With an active UWF (Unified Write Filter), 2 GB RAM are recommended.
The specified size is the minimum requirement according to Microsoft. B&R recommends, however, using 2 GB or more of RAM with 32-bit operating systems.
3) The specified size is the minimum requirement according to Microsoft. B&R recommends, however, using 4 GB or more of RAM with 64-bit operating systems.

4.4 Features with Windows Embedded 8.1 Industry Pro

The following list of features shows the most important device functions included in Windows Embedded 8.1 Industry Pro.

Function	Windows Embedded 8.1 Industry Pro
Range of functions in Windows 8.1 Pro	✓
Internet Explorer 11, including Enterprise Mode	✓
Multi-touch support	✓
Multilingual support	After installation using language pack DVDs (default language is English)
Page file	Configurable (switched off in image by default by UWF)
Hibernate file	Configurable (switched off in image by default)
System restore	Configurable (switched off in image by default by UWF)
SuperFetch	Configurable (switched off in image by default by UWF)
File indexing service	Configurable (switched off in image by default by UWF)
Fast boot	Configurable (switched off in image by default by UWF)
Defragmentation service	Configurable (switched off in image by default by UWF)
Additional embedded lockdown functions	
Assigned access	Configurable
Dialog filter	Configurable
Embedded Lockdown Manager	✓
Keyboard filter	Configurable
Shell launcher	Configurable
Toast Notification Filter	Configurable
USB filter	Configurable
Unified Write Filter	✓
Windows 8 Application Launcher	Configurable
Gesture filter	Configurable

Table 263: Device functions in Windows Embedded 8.1 Industry Pro

4.5 Installation

B&R preinstalls Windows Embedded 8.1 Industry Pro on a suitable data storage device (32-bit: minimum 16 GB, 64-bit: minimum 20 GB). When switched on for the first time, the system runs through the OOBE (Out-of-Box Experience), which allows different settings to be made (e.g. language, region, keyboard layout, computer name, username, etc.).

Information:

If the product key is requested during the OOBE, it can be skipped by pressing "Skip".

4.6 Drivers

All drivers required for operation are preinstalled along with the operating system. If an older version of a driver is still being used, its latest version can be downloaded and installed from the B&R website (www.br-automation.com). It is important that Unified Write Filter (UWF) is disabled for this.

Information:

Required drivers must be downloaded from the B&R website only, not from manufacturer websites.

4.7 Activation

In contrast to previous versions – Windows 7 and Windows XP Professional – Windows Embedded 8.1 Industry Pro must be activated. This has already been done at B&R.

The status of the activation can be viewed in the Control Panel:

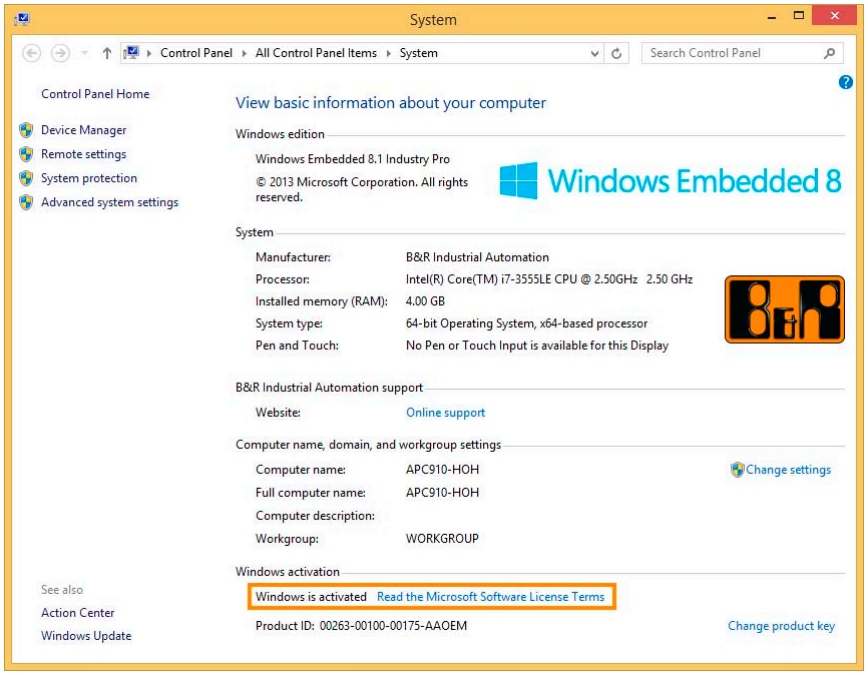

Information:

Activation can become negated when making changes to hardware (e.g. replacing components in repair situations) and when reinstalling the system (e.g. with the Recovery DVD).

In this case, a "watermark message" will always be shown on the screen:

Windows Embedded 8.1 Industry Pro does not carry out any restarts or show any pop-up messages, which means that it is fully functional at all times. Personalization is not possible, however (e.g. setting the desktop background).

The product can be activated at a later time either over the phone or via the Internet. Instructions for doing so can be found on the Microsoft website.

Activation via direct Internet connection:
http://msdn.microsoft.com/en-us/library/dn449258(v=winembedded.82).aspx
Activation over the telephone:
http://msdn.microsoft.com/en-us/library/dn449379(v=winembedded.82).aspx

Information:

The product key never has to be entered for reactivation.

4.8 Contents of the Recovery DVD

DVDs with model numbers 5SWWI8.0100-MUL and 5SWWI8.0200-MUL are only for recovery purposes.

Information:

They are only used to carry out the basic installation of Windows Embedded 8.1 Industry Pro. In contrast to the preinstalled operating system versions, the operating system does not include device-specific drivers (network, graphics, ADI, etc.) or optimized settings, nor is it activated! The product can be activated at a later time either over the phone or via the Internet (see "Activation").

4.9 Lockdown features

The lockdown functions in Windows Embedded 8.1 Industry Pro make it possible to individually configure the device while making the system more secure at the same time. They include:

- Unified Write Filter (UWF)
  These features make it possible to configure a data storage device (e.g. CFast) for read-only access, for example, or to allow only certain registry keys to be accessed. As a result, the system always starts with the same configuration after rebooting.
- Dialog filter
  This feature can be used to suppress pop-up windows and dialog boxes. Such dialog boxes can occur, for example, if virus scanners are updated, network connections fail or the Windows Security Center shows warnings. These windows can simply be hidden.
- Keyboard filter
  The keyboard filter allows individual keys or certain keyboard shortcuts to be locked to prevent users from accessing certain functions (e.g. Task Manager).

Additional information about lockdown functions can be found on the Microsoft website at this address:
http://msdn.microsoft.com/en-us/library/dn449278(v=winembedded.82).aspx

4.10 Supported display resolutions

In accordance with Microsoft requirements, Windows Embedded 8.1 Industry Pro requires XGA resolution (1024 x 768) or higher in order to allow unimpeded operation of the Windows user interface (including system dialog boxes and apps, etc.). A lower resolution can be selected for applications.

5 Windows 7

5.1 General information

Windows 7 offers a wide range of innovative features and performance improvements. The 64-bit variants also exploit the full power of current PC architectures. Faster switching to sleep mode, quicker restores, less memory usage and high-speed detection of USB devices are just a few of the advantages of Windows 7. Both English and German are available in Windows 7 Professional, while Windows 7 Ultimate supports up to 35 different languages (up to 36 languages in Service Pack 1). Product activation is not necessary on B&R PCs, which is an enormous advantage for simple logistical procedures relating to machine automation.

All Windows operating systems offered by B&R are from the Microsoft Embedded division. This guarantees much longer availability, especially compared to products offered on the consumer market.

5.2 Order data

Model number	Short description	Figure
	Windows 7 Professional/Ultimate	
5SWWI7.1100-GER	Windows 7 Professional SP1 - 32-bit - German - DVD	
5SWWI7.1100-ENG	Windows 7 Professional SP1 - 32-bit - English - DVD	
5SWWI7.1200-GER	Windows 7 Professional SP1 - 64-bit - German - DVD	
5SWWI7.1200-ENG	Windows 7 Professional SP1 - 64-bit - English - DVD	
5SWWI7.1300-MUL	Windows 7 Ultimate SP1 - 32-bit - Multilingual - DVD	
5SWWI7.1400-MUL	Windows 7 Ultimate SP1 - 64-bit - Multilingual - DVD	

Table 264: 5SWWI7.1100-GER, 5SWWI7.1100-ENG, 5SWWI7.1200-GER, 5SWWI7.1200-ENG, 5SWWI7.1300-MUL, 5SWWI7.1400-MUL - Order data

5.3 Overview

Model number	Edition	Target system	Chipset	Service pack	Architecture	Language	Minimum hard disk space required	Minimum RAM required
5SWWI7.1100-GER	Professional	APC510 APC511 APC810 APC910 APC2100 PPC800 PPC900 PPC2100 PP500	945GME GM45 QM77/HM76 NM10 US15W Bay Trail	SP1	32-bit	German	16 GB	1 GB [1]
5SWWI7.1100-ENG	Professional	APC510 APC511 APC810 APC910 APC2100 PPC800 PPC900 PPC2100 PP500	945GME GM45 QM77/HM76 NM10 US15W Bay Trail	SP1	32-bit	English	16 GB	1 GB [1]
5SWWI7.1200-GER	Professional	APC810 APC910 APC2100 PPC800 PPC900 PPC2100	945GME Intel Core2 Duo GM45 QM77/HM76 Bay Trail	SP1	64-bit	German	20 GB	2 GB [2]
5SWWI7.1200-ENG	Professional	APC810 APC910 APC2100 PPC800 PPC900 PPC2100	945GME Intel Core2 Duo GM45 QM77/HM76 Bay Trail	SP1	64-bit	English	20 GB	2 GB [2]
5SWWI7.1300-MUL	Ultimate	APC510 APC511 APC810 APC910 APC2100 PPC800 PPC900 PPC2100 PP500	945GME GM45 QM77/HM76 NM10 US15W Bay Trail	SP1	32-bit	Multilingual	16 GB [3]	1 GB [1]
5SWWI7.1400-MUL	Ultimate	APC810 APC910 APC2100 PPC800 PPC900 PPC2100	945GME Intel Core2 Duo GM45 QM77/HM76 Bay Trail	SP1	64-bit	Multilingual	20 GB [3]	2 GB [2]

Table 265: Windows 7 - Overview

1) The specified amount of memory is the minimum requirement according to Microsoft. B&R recommends, however, using 2 GB or more of RAM with 32-bit operating systems.
2) The specified amount of memory is the minimum requirement according to Microsoft. B&R recommends using at least 4 GB RAM with 64-bit operating systems, however.
3) The memory used by additional language packs is not taken into account in the minimum size of the disk.

5.4 Installation

B&R preinstalls the required Windows 7 version on the desired storage device (e.g. CompactFlash card,CFast card, etc.). All of the drivers required for operation (graphics, network, etc.) are also installed in this process.

5.4.1 Installing on the PCI SATA RAID controller - 5ACPCI.RAIC-06

The following steps are necessary to install Windows 7 on the PCI SATA RAID controller:

1. Download the "PCI SATA RAID driver 5ACPCI.RAIC-01, -03, -05, -06" driver for Windows 7 from the B&R website at www.br-automation.com and copy the data to a folder on a USB flash drive.
2. Boot using the Windows 7 DVD.
3. Follow the installation steps until a page appears asking "Where do you want to install Windows?".
4. Connect the USB flash drive with the RAID drivers into an available USB interface.
5. Click on "Load driver" and navigate to the directory containing the RAID drivers. Then click "Next" to continue.
6. Remove the USB flash drive.
7. The Windows 7 installation can now be performed as usual.

5.4.2 Installing on the internal RAID controller (QM77)

The following steps are necessary to install Windows 7 on the internal RAID controller (QM77):

1. Download the "AHCI and RAID driver QM77" driver for Windows 7 from the B&R website at www.br-automation.com and copy the data to a folder on a USB flash drive.
2. Boot using the Windows 7 DVD.
3. Follow the installation steps until a page appears asking "Where do you want to install Windows?".
4. Connect the USB flash drive with the RAID drivers into an available USB interface.
5. Click on "Load driver" and navigate to the directory containing the RAID drivers. Then click "Next" to continue.
6. Remove the USB flash drive.
7. The Windows 7 installation can now be performed as usual.

5.5 Drivers

Current drivers for all approved operating systems are available in the Downloads section of the B&R website (www.br-automation.com).

> **Information:**
>
> **Required drivers must be downloaded from the B&R website only, not from manufacturer websites.**

5.6 Special considerations, limitations

- Windows 7 does not contain a Beep.sys file, which means that an audible signal is not sounded when pressing a key, for example.
- There is currently no support for the Windows 7 system rating (although this does not apply to PP500, APC2100, APC510, APC511, APC910, PPC2100 or PPC800 devices with an NM10 chipset).

> **Information:**
>
> **32-bit operating systems are not recommended for system units with 4 GB or more of main memory. More information can be found in section "Miscellaneous configuration" on page under "PCI MMIO size".**

6 Windows Embedded Standard 7

6.1 General information

The successor to Windows XP Embedded is Windows Embedded Standard 7. As with previous versions, this embedded operating system offers full system support for B&R Industrial PCs. In addition to new features that are also included in Windows 7 Professional, Windows Embedded Standard 7 includes embedded components such as Enhanced Write Filter, File-Based Write Filter, Registry Filter and USB Boot. Windows Embedded Standard 7 is available in two different versions. The main difference between them has to do with multilingual support. Windows Embedded Standard 7 is only available in a single language, whereas Windows Embedded Standard 7 Premium supports the installation of several languages simultaneously.

With Windows Embedded Standard 7, Microsoft has made substantial improvements in the area of security. The AppLocker program, available in the premium version, can prevent the execution of unknown or potentially undesired applications that are being installed over a network or from drives that are directly connected. A tiered approach allows the differentiation between scripts (.ps1, .bat, .cmd, .vbs and .js), installation files (.msi, .msp) and libraries (.dll, .ocx). AppLocker can also be configured to record undesired activity and display it in the Event Viewer. Windows Embedded Standard 7 is available as both a 32-bit and 64-bit version[6], which ensures that even the most demanding applications have the level of support they need.

6.2 Order data

Model number	Short description	Figure
	Windows Embedded Standard 7	
5SWWI7.1540-ENG	Windows Embedded Standard 7 SP1 - 32-bit - English - For APC910 with QM77/HM76 chipset - License	
5SWWI7.1640-ENG	Windows Embedded Standard 7 SP1 - 64-bit - English - For APC910 with QM77/HM76 chipset - License	
5SWWI7.1740-MUL	Windows Embedded Standard 7 Premium SP1 - 32-bit - Multilingual - For APC910 with QM77/HM76 chipset - License	
5SWWI7.1840-MUL	Windows Embedded Standard 7 Premium SP1 - 64-bit - Multilingual - For APC910 with QM77/HM76 chipset - License	
	Optional accessories	
	Windows Embedded Standard 7	
5SWWI7.1900-MUL	Windows Embedded Standard 7 SP1 - 32-bit - Language Pack DVD	
5SWWI7.2000-MUL	Windows Embedded Standard 7 SP1 - 64-bit - Language Pack DVD	

Table 266: 5SWWI7.1540-ENG, 5SWWI7.1640-ENG, 5SWWI7.1740-MUL, 5SWWI7.1840-MUL - Order data

6.3 Overview

Model number	Edition	Target system	Chipset	Service pack	Architecture	Language	Minimum disk size	Minimum RAM required
5SWWI7.1540-ENG	Embedded	APC910	QM77 HM76	SP1	32-bit	English	16 GB	1 GB [1]
5SWWI7.1640-ENG	Embedded	APC910	QM77 HM76	SP1	64-bit	English	16 GB	2 GB [2]
5SWWI7.1740-MUL	Premium	APC910	QM77 HM76	SP1	32-bit	Multilingual	16 GB [3]	1 GB [1]
5SWWI7.1840-MUL	Premium	APC910	QM77 HM76	SP1	64-bit	Multilingual	16 GB [3]	2 GB [2]

1) The specified size is the minimum requirement according to Microsoft. B&R recommends, however, using 2 GB or more of RAM with 32-bit operating systems.
2) The specified size is the minimum requirement according to Microsoft. B&R recommends, however, using 4 GB or more of RAM with 64-bit operating systems.
3) The memory used by additional language packs is not taken into account in the minimum size of the disk.

[6] 64-bit versions are not supported by all systems.

6.4 Features with WES7 (Windows Embedded Standard 7)

The following list of features shows the most important device functions included in Windows Embedded Standard 7.

Function	Windows Embedded Standard 7	Windows Embedded Standard 7 Premium
Enhanced Write Filter (EWF)	✓	✓
File-Based Write Filter (FBWF)	✓	✓
Administrator accounts	✓	✓
User accounts	Configurable	Configurable
Windows Explorer shell	✓	✓
Registry filter	✓	✓
Internet Explorer 8.0 Internet Explorer 11.0	✓	✓
Internet Information Service (IIS) 7.0	✓	✓
Anti-malware (Windows Defender)	-	✓
Add-ons (Snipping Tool, Sticky Notes)	-	✓
Windows Firewall	✓	✓
.NET Framework 3.5	✓	✓
32-bit and 64-bit	✓	✓
Remote Desktop Protocol 7.0	✓	✓
File Compression Utility	✓	✓
Windows Installer Service	✓	✓
Windows XP mode	-	-
Media Player 12	✓	✓
DirectX	✓	✓
Multilingual user interface packs in the same image	-	✓
International components and language services	✓	✓
Language pack setup	✓	✓
Windows Update	Configurable	Configurable
Windows PowerShell 2.0	✓	✓
BitLocker	-	✓
AppLocker	-	✓
Tablet PC support	-	✓
Multi-touch support	-	✓
Boot from USB flash drive	✓	✓
Accessories	✓	✓
Page file	Configurable	Configurable
Number of fonts	134	134

Table 267: Device functions in Windows Embedded Standard 7

6.5 Installation

B&R preinstalls Windows Embedded Standard 7 on a suitable CFast card (32-bit: minimum 16 GB, 64-bit: minimum 16 GB). The system is then automatically configured when it is switched on for the first time. This procedure takes approximately 30 minutes, with the device being rebooted a number of times.

Information:

If Enhanced Write Filter (EWF) should be used, all mass storage devices should be disconnected from the system during installation or SYSPREP (except for the boot drive). It is also possible to disable additional mass storage devices in BIOS.

6.6 Drivers

All drivers required for operation are preinstalled along with the operating system. If an older version of a driver is still being used, its latest version can be downloaded and installed from the B&R website (www.br-automation.com). It is important that Enhanced Write Filter (EWF) is disabled for this.

6.6.1 Touch screen driver

A touch screen driver will be installed automatically if a touch controller is detected during the Windows Embedded Standard 7 installation. If a touch controller is not detected during Windows Embedded Standard 7 installation or a B&R Automation Panel is connected at a later time, then the touch screen driver needs to be installed manually or the additional touch screen interface must be selected in the touch screen settings in the Windows Control Panel. The driver is available in the Downloads section of the B&R website (www.br-automation.com). It is important that both Enhanced Write Filter (EWF) and File Based Write Filter (FBWF) are disabled for this.

> **Information:**
>
> **Required drivers must be downloaded from the B&R website only, not from manufacturer websites.**

6.7 Supported display resolutions

In accordance with Microsoft requirements, Windows Embedded Standard 7 requires XGA resolution (1024 x 768) or higher in order to allow unimpeded operation of the Windows user interface (including system dialog boxes and apps, etc.). A lower resolution can be selected for applications.

7 Windows XP Professional

7.1 General information

> **Information:**
>
> **Discontinuation of support for Windows XP by Microsoft:**
>
> **After *April 8th, 2014*, Microsoft will no longer be providing any security updates, hotfixes, support (free or paid) or technical resources for Windows XP.**

7.2 Order data

Model number	Short description	Figure
	Windows XP Professional	
5SWWXP.0600-GER	Windows XP Professional SP3 - German - CD	
5SWWXP.0600-ENG	Windows XP Professional SP3 - English - CD	
5SWWXP.0600-MUL	Windows XP Professional SP3 - Multilingual - CD	

Table 268: 5SWWXP.0600-GER, 5SWWXP.0600-ENG, 5SWWXP.0600-MUL - Order data

7.3 Overview

Model number	Edition	Target system	Chipset	Service pack	Language	Minimum hard disk space required	Minimum RAM required
5SWWXP.0600-GER	Professional	APC510 APC511 APC620 APC810 APC820 APC910 PPC700 PPC725 PPC800 PPC900 PP500	945GME GM45 QM77/HM76 NM10 US15W	SP3	German	≤2.1 GB	128 MB
5SWWXP.0600-ENG	Professional	APC510 APC511 APC620 APC810 APC820 APC910 PPC700 PPC725 PPC800 PPC900 PP500	945GME GM45 QM77/HM76 NM10 US15W	SP3	English	≤2.1 GB	128 MB
5SWWXP.0600-MUL	Professional	APC510 APC511 APC620 APC810 APC820 APC910 PPC700 PPC725 PPC800 PPC900 PP500	945GME GM45 QM77/HM76 NM10 US15W	SP3	Multilingual	≤2.1 GB	128 MB

7.4 Installation

B&R preinstalls the required Windows XP Professional version on the desired storage device (e.g. CompactFlash card, etc.). All of the drivers required for operation (graphics, network, etc.) are also installed in this process.

7.4.1 Installing on the PCI SATA RAID controller - 5ACPCI.RAIC-06

The following steps are necessary to install Windows XP Professional on a PCI SATA RAID controller:

1. Download the "PCI SATA RAID driver 5ACPCI.RAIC-01, -03, -05, -06" driver for Windows XP from the B&R website at www.br-automation.com and copy the files to a diskette.
2. Connect the media drive (5MD900.USB2-01 or 5MD900.USB2-02) to the USB interface.
3. Insert the diskette and Windows XP Professional CD in the media drive and boot from the CD.
4. Press the F6 key during installation to install a third-party SCSI or driver.
5. Press the "s" key when asked about installing an additional drive. Insert the diskette into the floppy drive. Press "Enter" and select the driver.
6. Follow the installation instructions.
7. The installer will copy the files to the Windows XP Professional folder and restart the B&R Industrial PC.

Information:

- **Not all USB FDD drives are supported by the Windows XP installer (see Microsoft KB 916196).**
- **Depending on the system, the boot order may have to be changed in BIOS.**

7.4.2 Installing on the internal RAID controller (QM77) or in AHCI mode

The following steps are necessary to install Windows XP Professional on the internal RAID controller (QM77) or in AHCI mode:

1. Download the "AHCI and RAID driver QM77" driver for Windows XP from the B&R website at www.br-automation.com and copy the files to a diskette.
2. Connect the media drive (5MD900.USB2-01 or 5MD900.USB2-02) to the USB interface.
3. Insert the diskette and Windows XP Professional CD in the media drive and boot from the CD.
4. Press the F6 key during installation to install a third-party SCSI or driver.
5. Press the "s" key when asked about installing an additional drive. Insert the diskette into the floppy drive. Press "Enter" and select the driver.
6. Follow the installation instructions.
   Select "Intel(R) 7 Series Chipset Family SATA AHCI Controller" for AHCI.
   Select "Intel(R) Mobile Express Chipset SATA RAID Controller" RAID.
7. The installer will copy the files to the Windows XP Professional folder and restart the B&R Industrial PC.

If the driver is installed while AHCI is enabled, the following message will appear twice: "Software installation has not passed Windows Logo testing to verify its compatibility with Windows XP. Do you want to continue installing the software?" Select "Yes".

Information:

- **Not all USB FDD drives are supported by the Windows XP installer (see Microsoft KB 916196).**
- **Depending on the system, the boot order may have to be changed in BIOS.**

7.5 Drivers

Current drivers for all approved operating systems are available in the Downloads section of the B&R website (www.br-automation.com).

Information:

Required drivers must be downloaded from the B&R website only, not from manufacturer websites.

8 Windows Embedded Standard 2009

8.1 General information

Windows Embedded Standard 2009 is the modular version of Windows XP Professional. It is used if XP applications should be executed with a minimal operating system size. Together with CompactFlash memory, Windows Embedded Standard 2009 makes it possible to use the Microsoft desktop operating system in harsh environmental conditions. In addition to the familiar features included in Windows XP Professional, Windows Embedded Standard 2009 has been improved with regard to dependability by adding a write filter for individual memory partitions. By protecting individual partitions such as the boot partition, the PC system can be started without problems even after an unexpected power failure. B&R offers complete images for industrial PCs, Power Panel and Mobile Panel devices to make the transition to Windows Embedded Standard 2009 as easy as possible. In addition to Windows Embedded Standard 2009, the standard Windows XP Professional operating system is also available in English, German and a multilingual version.

Windows Embedded Standard 2009 is based on the same binary files as Windows XP Professional with Service Pack 3 and is optimally tailored to the hardware being used. In other words, only the functions and modules required by the respective device are included. Windows Embedded Standard 2009 is also based on the same reliable code as Windows XP Professional with SP3. It provides industry with leading reliability, security and performance improvements as well as the latest technology for web browsing and extensive device support.

8.2 Order data

Model number	Short description	Figure
	Windows Embedded Standard 2009	
5SWWXP.0740-ENG	Windows Embedded Standard 2009 - English - For PPC900 with QM77/HM76 chipset - License	

Table 269: 5SWWXP.0740-ENG - Order data

8.3 Overview

Model number	Target system	Chipset	Language	Minimum disk size	Minimum RAM required
5SWWXP.0740-ENG	APC910	QM77 HM76	English	2 GB	256 MB

8.4 Features with WES2009 (Windows Embedded Standard 2009)

The following list of features shows the most important device functions included in Windows Embedded Standard 2009.

Function	Included?
Enhanced Write Filter (EWF)	✓
File-Based Write Filter (FBWF)	✓
Page file	Configurable
Administrator accounts	✓
User accounts	Configurable
Explorer shell	✓
Registry filter	✓
Internet Explorer 8.0	✓
Internet Information Service (IIS)	-
Terminal service	✓
Windows Firewall	✓
MSN Explorer	-
Outlook Express	-
Administrative Tools	✓
Remote Desktop	✓
Remote Assistance	-
.NET Framework	-
ASP.NET	-
OpenGL support	✓
Local network bridge	✓
Codepages / User locales / Keyboards	✓
Disk Management Service	✓
Windows Installer Service	✓
Class Installer	✓
CoDevice Installer	✓

Table 270: Device functions in Windows Embedded Standard 2009

Function	Included?
Media Player 64	✓
DirectX 9.0c	✓
Accessories	✓
Number of fonts	89

Table 270: Device functions in Windows Embedded Standard 2009

8.5 Installation

Windows Embedded Standard 2009 is already preinstalled on a suitable CFast card by B&R (minimum 1 GB). The system is then automatically configured when it is switched on for the first time. This procedure takes approximately 10 minutes, with the device being rebooted a number of times.

8.6 Drivers

All drivers required for operation are preinstalled along with the operating system. If an older version of a driver is still being used, its latest version can be downloaded and installed from the B&R website (www.br-automation.com). It is important that Enhanced Write Filter (EWF) is disabled for this.

8.7 Supported display resolutions

In accordance with Microsoft requirements, Windows Embedded Standard 2009 requires SVGA resolution (800 x 600) or higher in order to allow unimpeded operation of the Windows user interface (including system dialog boxes, etc.). A lower resolution can be selected for applications.

9 Automation Runtime

9.1 General information

An integral component of Automation Studio is the Automation Runtime real-time operating system. This real-time operating system is the software kernel that allows applications to run on a target system.

- Guaranteed highest possible performance for the hardware being used
- Runs on all B&R target systems
- Makes the application hardware-independent
- Easy portability of applications between B&R target systems
- Deterministic behavior guaranteed by cyclic system
- Configurable jitter tolerance in all task classes
- Supports all major programming languages such as IEC 61131-3 and C
- Extensive function library conforming to IEC 61131-3 as well as the expanded B&R Automation library
- Integrated into Automation NET. Access to all networks and bus systems via function calls or the Automation Studio™ configuration

B&R Automation Runtime is fully embedded in the corresponding target system (the hardware where Automation Runtime is installed). It allows application programs to access I/O systems (e.g. via the fieldbus) and other devices (interfaces, networks, etc.).

9.2 Order data

Model number	Short description	Figure
	Technology Guard	
0TG1000.01	Technology Guard (MSD) is provided in USB device class MSD (mass storage device)	
0TG1000.02	Technology Guard (HID) is provided in USB device class HID (human interface device). Automation Runtime supports HIDs in version D4.09 and later.	
1TG4600.10-5	Automation Runtime Windows, TG license	
1TG4601.06-5	Automation Runtime Embedded, TG license	

Table 271: 0TG1000.01, 0TG1000.02, 1TG4600.10-5, 1TG4601.06-5 - Order data

9.3 Automation Runtime Windows (ARwin)

System requirements

The following software versions (or higher) are required to operate Automation Runtime Windows on an Automation PC 910:

- ARwin upgrade AR A4.02
- Automation Studio V3.0.90.x or V4.0.14.x
- Technology Guard

Information:

In order to use Automation Runtime Windows (ARwin), the BIOS setting *Advanced - OEM features - Miscellaneous configuration - Realtime environment* must be set to *Enabled*.

Information:

In ARwin 4.06, ADI access is no longer possible from Windows and ARwin at the same time since the ADI interface is blocked by ARwin.

The following components are required in order to be able to access the ADI interface by Windows and ARwin simultaneously:

- **ADI driver V2.3 (or higher)**
- **ARwin I4.06 (or higher)**

9.4 Automation Runtime Embedded (ARemb)

System requirements

The following software versions (or higher) are required to operate Automation Runtime Embedded on an Automation PC 910:

- ARemb upgrade AR A4.02
- Automation Studio V3.0.90.x or V4.0.14.x
- Visual Components Runtime (VC) V3.96.0 or V4.05.2
- Technology Guard

PVI Development Setup must be downloaded from the B&R website (www.br-automation.com) and installed separately!

> **Information:**
>
> **In order to use Automation Runtime Embedded (ARemb), the BIOS setting *Advanced - OEM features - Miscellaneous configuration - Realtime environment* must be set to *Enabled*.**

9.5 Technology Guarding

Technology Guarding is a licensing approach used to safeguard individual software components. Licenses are stored on a "Technology Guard" (also referred to simply as a dongle), which is connected to an available USB interface on the target system.

The B&R software components Automation Runtime Embedded (ARemb), Automation Runtime Windows (ARwin) and Automation Runtime Embedded Terminal require a license, so a Technology Guard must always be used.

> **Information:**
>
> **Licensing with the Technology Guarding wizard is available in Automation Studio 4.1 and Automation Runtime 4.08 and higher. Earlier versions of Automation Runtime do not require a Technology Guard.**

Additional information about Technology Guarding can be found in Automation Help.

10 Debian (GNU/Linux)

10.1 General information

A Linux or GNU/Linux system is an open, Unix-like multiuser operating system based on the Linux kernel and GNU software. Widespread use and commercial applications were made possible starting in 1992 with the licensing of the Linux kernel under the GPL.

The Debian 8 operating system developed by B&R already contains all of the necessary drivers for the devices and can be used immediately without additional work.

Advantages of Debian:

- High degree of stability
- Wide selection of packages

For more information about Debian, visit http://www.debian.org.

10.2 Order data

Model number	Short description	Figure
	Debian 8	
5SWLIN.0540-MUL	Debian 8 - 32-bit - Multilingual - APC910 chipset QM77/HM76 - Installation (without Recovery DVD) - Only available with a new device	
5SWLIN.0640-MUL	Debian 8 - 64-bit - Multilingual - APC910 chipset QM77/HM76 - Installation (without Recovery DVD) - Only available with a new device	
	Optional accessories	
	CFast cards	
5CFAST.016G-00	CFast card, 16 GB SLC	
5CFAST.032G-00	CFast card, 32 GB SLC	
5CFAST.032G-10	CFast card, 32 GB MLC	
5CFAST.064G-10	CFast card, 64 GB MLC	
5CFAST.128G-10	CFast card, 128 GB MLC	
5CFAST.4096-00	CFast card, 4 GB SLC	
5CFAST.8192-00	CFast card, 8 GB SLC	

Table 272: 5SWLIN.0540-MUL, 5SWLIN.0640-MUL - Order data

10.3 Overview

Model number	Target system	Chipset	Architecture	Language	Minimum disk size	Minimum RAM required
5SWLIN.0540-MUL	APC910	QM77 HM76	32-bit	Multilingual	4 GB	1 GB
5SWLIN.0640-MUL	APC910	QM77 HM76	64-bit	Multilingual	4 GB	1 GB

10.4 Features

- LXDE desktop
- Touch screen driver
- MTCX driver
- ADI library
- HMI diagnostics tool
- Tool for right-click support via touch screen
- Virtual keyboard

Detailed information about Debian 8 for B&R devices is available in the Downloads section of the B&R website (www.br-automation.com).

10.5 Installation

B&R preinstalls Debian 8 on a desired storage device (e.g. CFast card, etc.). All of the drivers required for operation (graphics, network, etc.) are also installed in this process.

Debian 8 can also be downloaded from the Debian website (http://www.debian.org). The Debian website provides more detailed instructions.

Notes regarding installation on B&R devices are included in a separate document that can be downloaded from the B&R website (www.br-automation.com).

Installation packages are also available on the B&R website for the necessary B&R modifications (www.br-automation.com).

10.6 Drivers

All drivers required for operation are preinstalled along with the operating system.

The most current versions of B&R-specific drivers can be downloaded and installed from the B&R website (www.br-automation.com).

11 B&R Automation Device Interface (ADI) - Control Center

The ADI (Automation Device Interface) enables access to specific functions on B&R devices. Settings for devices can be read and configured using the B&R Control Center applet in the Control Panel.

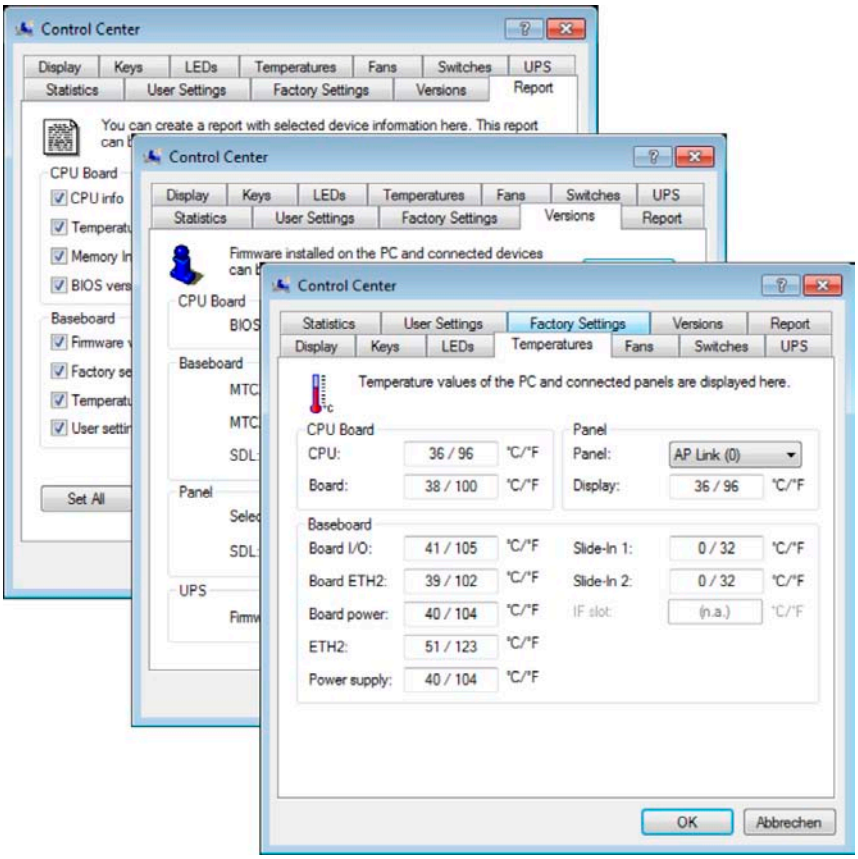

Figure 168: ADI Control Center screenshots - Examples

Information:

The temperature and voltage values (e.g. CPU temperature, core voltage, battery voltage) shown in the corresponding ADI window represent uncalibrated values for informational purposes. They cannot be used to draw any conclusions about hardware alarms or error conditions. The hardware components used have automatic diagnostic functions that can be applied in the event of error.

11.1 Functions

Information:

The functions provided by the Automation Device Interface (ADI) - Control Center vary according to the device series.

- Changing display-specific parameters
- Reading device-specific keys
- Updating the key configuration
- Enabling device-specific LEDs on a membrane keypad or keys
- Reading and calibrating control devices (e.g. key switches, handwheels, joysticks, potentiometers)
- Reading temperatures, fan speeds, statistical data and switch settings
- Reading operating hours (power-on hours)
- Reading user and factory settings
- Reading software versions
- Updating and backing up BIOS and firmware
- Creating reports about the current system (support assistance)
- Setting the SDL equalizer value when adjusting SDL cables
- Changing the user serial ID

Supports the following systems:

- Automation PC 510
- Automation PC 511
- Automation PC 620
- Automation PC 810
- Automation PC 820
- Automation PC 910
- Automation PC 2100
- Panel PC 300
- Panel PC 700
- Panel PC 725
- Panel PC 800
- Panel PC 900
- Panel PC 2100
- Power Panel 100/200
- Power Panel 300/400
- Power Panel 500
- Mobile Panel 40/50
- Mobile Panel 100/200
- Connected Automation Panel 800
- Connected Automation Panel 900
- Connected Automation Panel 1000

11.2 Installation

A detailed description of the Control Center can be found in the integrated help system. The B&R Automation Device Interface (ADI) driver (also includes the Control Center) is available at no charge in the Downloads section of the B&R website (www.br-automation.com).

1. Download and unzip the .zip archive.
2. Close all applications.
3. Run the Setup.exe file (e.g. double-click on it in Explorer).

> **Information:**
>
> **The ADI driver is already included in B&R images of embedded operating systems.**
>
> **If a more current ADI driver version exists (see the Downloads section of the B&R website), it can be installed later. It is important that Enhanced Write Filter (EWF) is disabled for this.**

12 B&R Automation Device Interface (ADI) Development Kit

This software can be used to access B&R Automation Device Interface (ADI) functions directly from Windows applications created in one of the following development environments:

- Microsoft Visual C++ 6.0
- Microsoft Visual Basic 6.0
- Microsoft Embedded Visual C++ 4.0
- Microsoft Visual Studio 2008 (or newer)

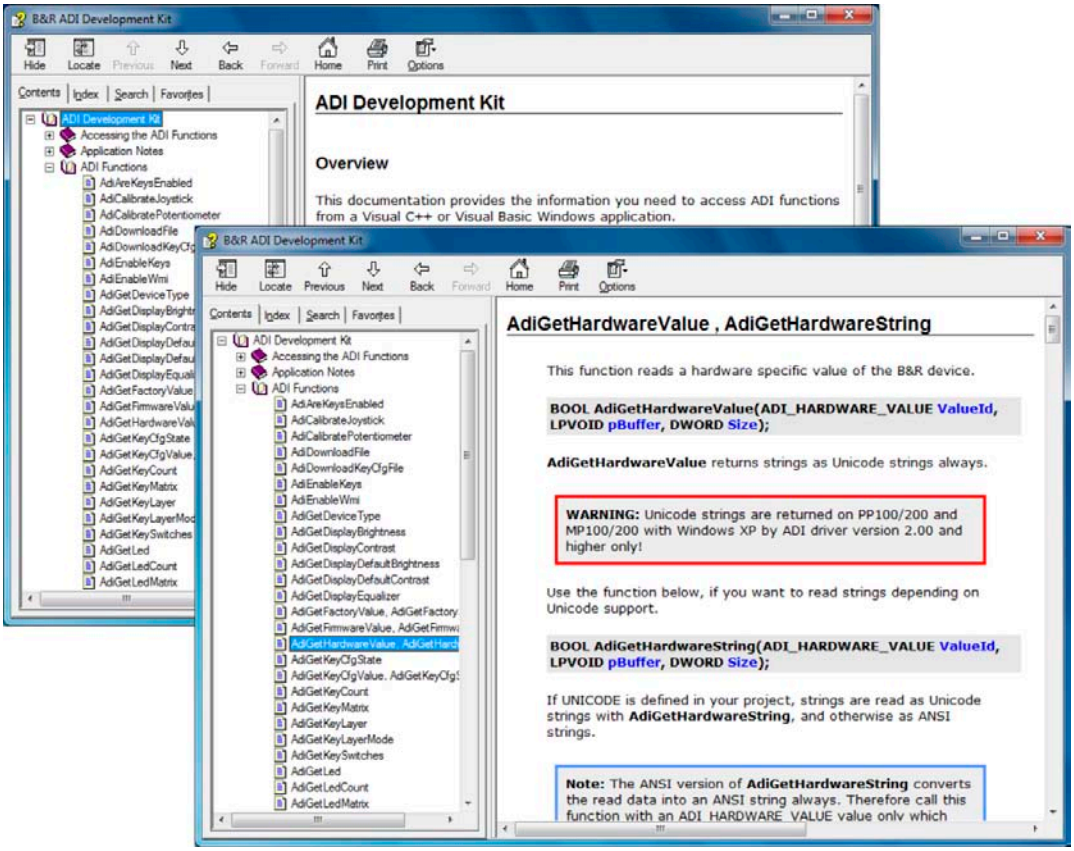

Figure 169: ADI Development Kit Screenshots (Version 3.70)

Features:

- One Microsoft Visual Basic module with ADI function declarations
- Header files and import libraries for Microsoft Visual C++
- Help files for Visual Basic and Visual C++
- Sample projects for Visual Basic and Visual C++
- ADI DLL (for application testing if no ADI driver is installed)

The following systems are supported (version 3.70 and higher):

- Automation PC 510
- Automation PC 511
- Automation PC 620
- Automation PC 810
- Automation PC 820
- Automation PC 910
- Automation PC 2100
- Panel PC 300
- Panel PC 700
- Panel PC 800
- Panel PC 900
- Panel PC 2100

- Power Panel 100/200
- Power Panel 300/400
- Power Panel 500
- Mobile Panel 40/50
- Mobile Panel 100/200

The ADI driver installed on the stated product series must be suitable for that device. The ADI driver is already included in B&R images of embedded operating systems.

A detailed description of how to use ADI functions can be found in the help system.

The B&R Automation Device Interface (ADI) development kit is available at no cost in the Downloads section of the B&R website (www.br-automation.com).

13 B&R Automation Device Interface (ADI) .NET SDK

This software can be used to access B&R Automation Device Interface (ADI) functions directly from .NET applications created using Microsoft Visual Studio 2005 or later.

Supported programming languages:

- Visual Basic
- Visual C++
- Visual C#

System requirements

- Development system: PC with Windows XP or Windows 7 and
  - Microsoft Visual Studio 2005 (or newer)
  - Microsoft .NET Framework 2.0 and/or Microsoft .NET Compact Framework 2.0 (or newer)

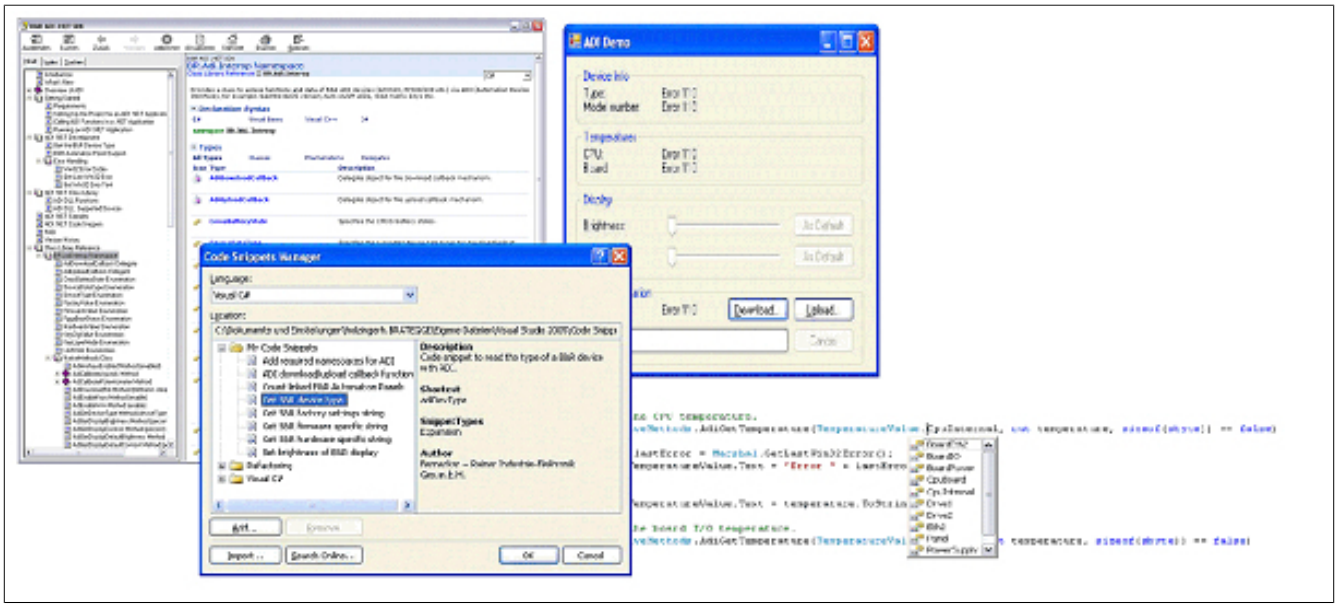

Figure 170: ADI .NET SDK screenshots (version 2.10)

Features (version 2.10 and higher)

- ADI .NET class library
- Help files in HTML Help 1.0 format (.chm), MS Help 2.0 format (.HxS) and MS Help Viewer format (.MSHC) (help documentation is in English only)
- Sample projects and code snippets for Visual Basic, Visual C++ and Visual C#
- ADI DLL (for application testing if no ADI driver is installed)

The following systems are supported (version 2.10 and higher):

- Automation PC 510
- Automation PC 511
- Automation PC 620
- Automation PC 810
- Automation PC 820
- Automation PC 910
- Automation PC 2100
- Panel PC 300
- Panel PC 700
- Panel PC 800
- Panel PC 900
- Panel PC 2100
- Power Panel 100/200
- Power Panel 300/400

- Power Panel 500
- Mobile Panel 40/50
- Mobile Panel 100/200

The ADI driver installed on the stated product series must be suitable for that device. The ADI driver is already included in B&R images of embedded operating systems.

A detailed description of how to use ADI functions can be found in the help system.

The ADI .NET SDK is available in the Downloads section of the B&R website (www.br-automation.com).

14 B&R Key Editor

On display devices, it is often necessary to adapt the function keys and LEDs directly to the application software being used. The B&R Key Editor makes it quick and easy to implement a unique configuration for the application.

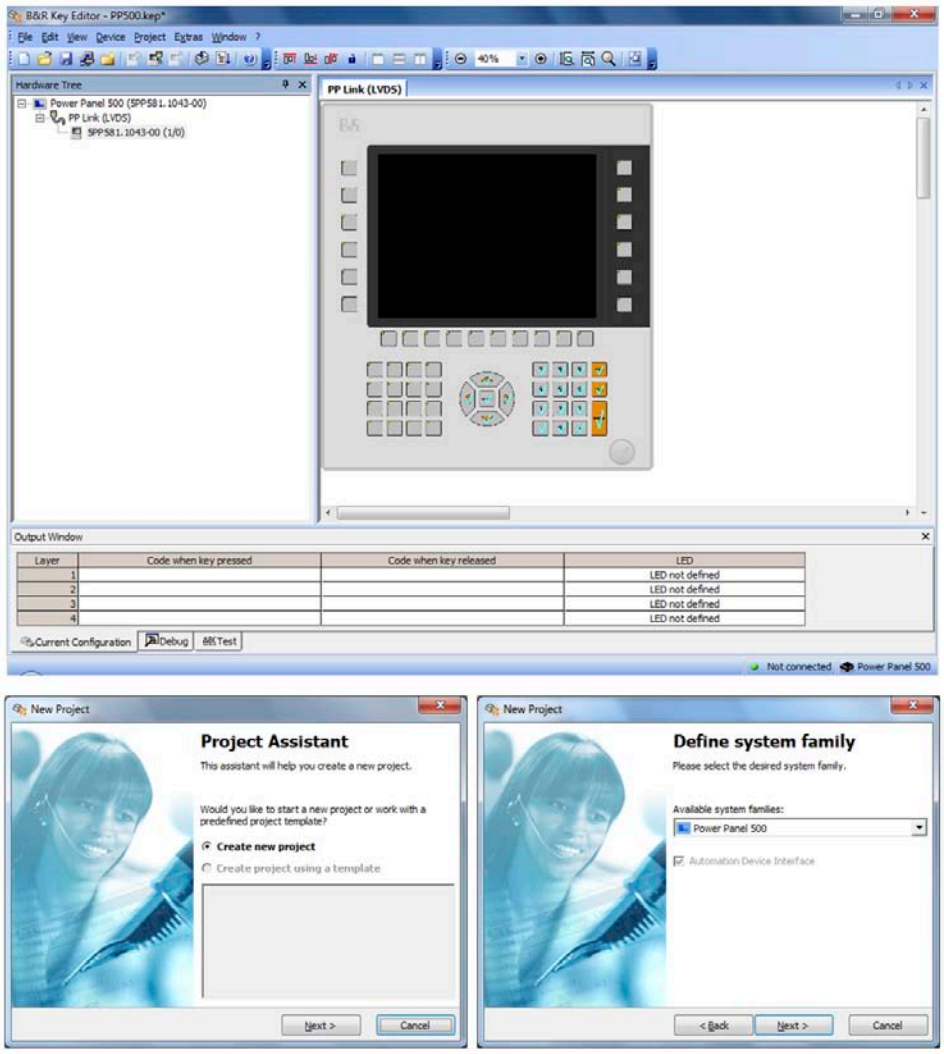

Figure 171: B&R Key Editor screenshots (version 3.60)

Features:

- Configuration of normal keyboard keys (A, B, C, etc.)
- Keyboard shortcuts (CTRL+C, SHIFT+DEL, etc.) using only one key
- Special key functions (change brightness, etc.)
- Assignment of functions to LEDs (HDD access, power, etc.)
- 4 assignments possible per key (using layers)
- Configuration of the panel locking time when multiple Automation Panel 900 devices are connected to Automation PC and Panel PC devices.

The following systems are supported (version 3.60 and higher):

- Automation PC 510
- Automation PC 511
- Automation PC 620
- Automation PC 810
- Automation PC 820
- Automation PC 910
- Automation PC 2100
- Automation Panel 800
- Automation Panel 830

- Automation Panel 900
- Automation Panel 9x3
- Automation Panel 9xD
- Automation Panel 1000
- IPC2000, IPC2001, IPC2002
- IPC5000, IPC5600
- IPC5000C, IPC5600C
- Mobile Panel 40/50
- Mobile Panel 100/200
- Panel PC 300
- Panel PC 700
- Panel PC 800
- Panel PC 900
- Panel PC 2100
- Power Panel 100/200
- Power Panel 300/400
- Power Panel 500

A detailed guide for configuring keys and LEDs as well as installing the key configuration on the target system can be found in the B&R Key Editor's help system. The B&R Key Editor is available in the Downloads section of the B&R website (www.br-automation.com).

15 B&R KCF Editor

The B&R KCF Editor can be used as a simple alternative to the B&R Key Editor. This tool allows function keys and LEDs to be adapted to the application software as needed. Unlike the B&R Key Editor, this program is operated from a simple Windows dialog box instead of graphically on the display. This makes it possible to use the B&R KCF Editor for devices that are not yet supported by the B&R Key Editor. The B&R KCF Editor is a portable application and can be launched on the target device without prior installation (directly from a USB flash drive, for example). An installed ADI driver is required to use the software's full range of functions.

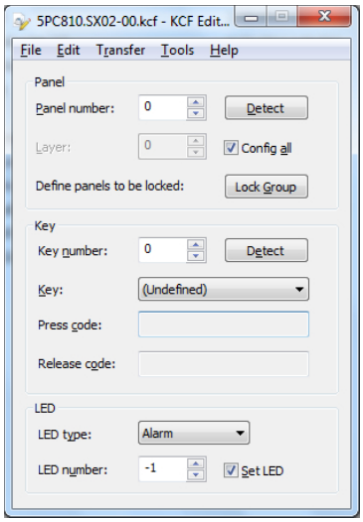

Figure 172: B&R KCF Editor screenshot (version 1.0)

Features

- Configuration of normal keyboard keys (A, B, C, etc.)
- Special key functions (change brightness, etc.)
- Assignment of functions to LEDs (HDD access, power, etc.)
- 4 assignments possible per key (using layers)
- Configuration of the panel locking time when multiple Automation Panel devices are connected to B&R PCs
- Configuration export/import (.ini files)
- Possible to save configuration as a report (text file)

Additional features when executing the B&R KCF Editor on the target device[7)]

- Panel and key detection
- LED test
- Configuration uploads/downloads

The following systems are supported (version 1.0 and higher)

- Automation PCs
- Panel PCs
- Automation Panels
- Power Panels
- Mobile panels

A detailed guide for configuring keys and LEDs can be found in the B&R KCF Editor user's manual. The B&R KCF Editor and its user's manual are available at no cost in the Downloads section of the B&R website (www.br-automation.com).

7) The ADI driver must be installed on the B&R PC to use these features.

16 HMI Service Center

16.1 5SWUTI.0001-000

16.1.1 General information

The HMI Service Center is a software tool used to test B&R Industrial PCs and Automation Panels. These tests cover many different aspects, including COM interfaces, network connectivity, SRAM, etc.

The test system consists of a USB flash drive with an installed Windows PE 5.1 operating system and the HMI Service Center.

Details regarding the HMI Service Center are available in the HMI Service Center user's manual. This can be downloaded from the B&R website (www.br-automation.com).

16.1.2 Order data

Model number	Short description	Figure
	Accessories	
5SWUTI.0001-000	HMI Service Center USB Flash Drive - Hardware diagnostics software - For APC810/PPC800 - For APC910/PPC900 - For APC2100/PPC2100 - For APC51x/PP500 - For Automation Panel 800/900	

Table 273: 5SWUTI.0001-000 - Order data

Chapter 5 • Standards and certifications

1 Standards and guidelines

1.1 CE mark

Product complies with all applicable directives and their harmonized EN standards.

1.2 EMC directive

These products meet the requirements of EU directive "Electromagnetic compatibility2014/30/EU" and are designed for industrial use:

EN 61131-2:2007	Programmable logic controllers - Part 2: Equipment requirements and tests
EN 61000-6 -2:2005	Electromagnetic compatibility (EMC) - Part 6-2: Generic standards - Immunity for industrial environments
EN 61000-6 -4:2007	Electromagnetic compatibility (EMC) - Part 6-4: Generic standards - Emission standard for industrial environments

Information:

Declarations of conformity are available on the B&R website at Downloads - Certificates - Declarations of conformity.

2 Certifications

Danger!

A complete system can only receive certification if ALL of the individual components it includes have the applicable certifications. If an individual component is being used that DOES NOT have an applicable certification, then the complete system WILL NOT receive certification.

Products and services from B&R comply with applicable standards. This includes international standards from organizations such as ISO, IEC and CENELEC, as well as national standards from organizations such as UL, CSA, FCC, VDE, ÖVE, etc. We are committed to ensuring the reliability of our products in an industrial environment.

Information:

Applicable certifications for respective products are available on the website, the "Certifications" section of the technical data in the user's manual or in associated certificates.

2.1 UL certification

Products with this mark have been tested by Underwriters Laboratories and are listed as "Industrial Control Equipment". This mark is valid for the USA and Canada and simplifies the certification of your machines and systems in these regions.

Underwriters Laboratories (UL) in accordance with the UL508 standard
Canadian (CSA) standard in accordance with C22.2 No. 142-M1987

UL certificates are available on the B&R website at Downloads - Certificates - UL.

Ind.Cont.Eq.
E115267

2.2 GOST-R

Products with this mark have been tested by an accredited testing laboratory and approved for import to the Russian Federation (based on CE compliance).

2.3 EAC

Products with this mark have been tested by an accredited testing laboratory and approved for import to the Eurasian Economic Union (based on EU compliance).

2.4 KC

Products with this mark have been tested by an accredited testing laboratory and approved for import to the Korean market (based on EU compliance).

2.5 RCM

Products with this mark have been tested by an accredited testing laboratory and certified by the ACMA. This mark is valid in Australia/Oceania and simplifies the certification of your machines and systems in these areas (based on EU compliance).

2.6 DNV GL certification (Det Norske Veritas Germanischer Lloyd)

Products with this mark have been certified by the DNV GL classification society and are suitable for use in maritime environments. DNV GL certificates (type approval) are generally accepted by other classification societies during ship acceptance procedures.

DNV GL in accordance with standard DNVGL-CG-0339 (November 2015)
IACS E10
EN 60945 section 1c

These products are suitable for the following DNV GL environmental conditions (DNV GL classes):

Temperature	B
Humidity	B
Vibration	A
EMC	B
Enclosure	Required protection according to the Rules shall be provided upon installation on board.

Products used on a ship's bridge must be dimmable using software in accordance with the regulations and guidelines from the respective classification society.

Information:

Line filter 5AC804.MFLT-00 is absolutely mandatory in the supply line when used in a maritime environment. For more information, see section "Connecting to the end device" on page 375.

The following table lists the revisions from which DNV GL certification applies to individual components.

Model number	Description	DNV GL beginning with rev.
5PC910.SX01-00	1-slot APC910 system unit	E0
5PC910.SX02-00	2-slot APC910 system unit	G0
5AC901.BX01-00	APC910 1-slot bus - 1 PCI	D0
5AC901.BX01-01	APC910 1-slot bus - 1 PCI Express x8	E0
5AC901.BX02-00	APC910 2-slot bus - 2 PCI	D0
5AC901.BX02-01	APC910 2-slot bus - 1 PCI - 1 PCI Express x8	E0
5AC901.BX02-02	APC910 2-slot bus - 2 PCI Express x4	E0
5PC900.TS77-00	CPU board Intel Core i7 3615QE 2.3 GHz - Quad core - QM77 chipset - For APC910	E0
5PC900.TS77-04	CPU board Intel Core i5 3610ME 2.7 GHz - Dual core - QM77 chipset - For APC910	D0
5PC900.TS77-10	CPU board Intel Celeron 1047UE 1.4 GHz - Dual core - HM76 chipset - For APC910	D0
5MMDDR.1024-03	SO-DIMM DDR3, 1024 MB	D0
5MMDDR.2048-03	SO-DIMM DDR3, 2048 MB	D0
5MMDDR.4096-03	SO-DIMM DDR3, 4096 MB	D0
5MMDDR.8192-03	SO-DIMM DDR3, 8192 MB	D0
5AC901.HS00-00	APC910 heat sink, active	D0
5AC901.FA01-00	APC910 fan kit - For 5PC910.SX01-00	D0
5AC901.FA02-00	APC910 fan kit - For 5PC910.SX02-00	D0
5AC901.I485-00	Interface card - 1x RS232/422/458 interface - For APC910/PPC900	D0
5AC901.ICAN-00	Interface card - 1x CAN interface - For APC910/PPC900	D0
5AC901.IHDA-00	Interface card - 1x audio interface (1x MIC/1x Line In/1x OUT) - For APC910/PPC900	D0
5ACPCI.ETH1-01	PCI Ethernet card 1x 10/100	D0
5ACPCI.ETH3-01	PCI Ethernet card 3x 10/100	D0
5AC804.MFLT-00	Line filter	D0
5AC901.CSSD-03	60 GB SSD MLC - Slide-in compact - SATA	E0
5AC901.CSSD-04	128 GB SSD MLC - Slide-in compact - SATA	F0
5AC901.CSSD-05	256 GB SSD MLC - Slide-in compact - Toshiba - SATA	D0
5AC901.SDVW-00	DVD drive - DVD-R/RW|DVD+R/RW - Slide-in	D0
5AC901.SSCA-00	Slide-in compact adapter - For slide-in compact drives	D0
5CFAST.2048-00	CFast card, 2 GB SLC	D0
5CFAST.4096-00	CFast card, 4 GB SLC	D0
5CFAST.8192-00	CFast card, 8 GB SLC	D0
5CFAST.016G-00	CFast card, 16 GB SLC	D0
5CFAST.032G-00	CFast card, 32 GB SLC	D0
5CFAST.032G-10	CFast card, 32 GB MLC	D0
5CFAST.064G-10	CFast card, 64 GB MLC	D0
5CFAST.128G-10	CFast card, 128 GB MLC	D0
5AC901.FF01-00	Front cover for 1-slot APC910 - Orange	D0
5AC901.FF01-01	Front cover for 1-slot APC910 - Dark gray	D0
5AC901.FF01-02	Front cover for 1-slot APC910 - Dark gray - Without logo	D0
5AC901.FF02-00	Front cover for 2-slot APC910 - Orange	D0
5AC901.FF02-01	Front cover for 2-slot APC910 - Dark gray	D0
5AC901.FF02-02	Front cover for 2-slot APC910 - Dark gray - Without logo	D0
5AC901.LSDL-00	SDL/DVI transmitter	D0
5AC900.1000-00	DVI (male connector) to CRT (female connector) adapter. For connecting a standard monitor to a DVI-I interface.	C0
0TB103.91	Connector 24 VDC - 3-pin female - Cage clamp terminal block 3.31 mm²	D0
0TB103.9	Connector 24 VDC - 3-pin female - Screw clamps 3.31 mm²	D0

DNV GL certificates with specifications for permitted environmental conditions are available on the B&R website at GL certificate no.: 61 601 - 13 HH.

Certificates for compass safe distance are available at BSH certificate no.: 875.

Chapter 6 • Accessories

The following accessories have successfully completed functional testing at B&R and can be used with this device. Nevertheless, it is important to observe any limitations that may apply to the complete system when operated with other individual components. When operating the complete system, all individual specifications for the components must be observed.

All components listed in this manual have been subjected to extensive system and compatibility testing and are approved for use accordingly. B&R cannot guarantee the functionality of non-approved accessories.

1 Power connectors

1.1 0TB103.9x

1.1.1 General information

This 1-row, 3-pin 0TB103 terminal block is used to connect the power supply.

1.1.2 Order data

Model number	Short description	Figure
	Accessories	
0TB103.9	Connector 24 VDC - 3-pin female - Screw clamp terminal block 3.31 mm²	
0TB103.91	Connector 24 VDC - 3-pin female - Cage clamp terminal block 3.31 mm²	

Table 274: 0TB103.9, 0TB103.91 - Order data

1.1.3 Technical data

> **Information:**
>
> **The following characteristics, features and limit values only apply to this accessory and can deviate from those specified for the complete system. The data specifications for the complete system take precedence over those of individual components.**

Model number	0TB103.9	0TB103.91
General information		
Certification		
CE	Yes	
UL	cULus E115267 Industrial Control Equipment	
HazLoc	cULus HazLoc E180196 Industrial Control Equipment for Hazardous Locations Class I, Division 2, Groups ABCD, T4[1)]	
DNV GL	Environmental Category C, EMC1[2)]	
Terminal block		
Note	Protected against vibration by the screw flange Nominal values according to UL	
Number of pins	3 (female)	
Type of terminal block	Screw clamp terminal block	Cage clamp terminal block [3)]
Cable type	Only copper wires (no aluminum wires!)	
Distance between contacts	5.08 mm	

Table 275: 0TB103.9, 0TB103.91 - Technical data

Model number	0TB103.9	0TB103.91
Connection cross section		
AWG wire	26 to 14 AWG	26 to 12 AWG
Wire end sleeves with plastic covering	0.20 to 1.50 mm²	
Solid wires	0.20 to 2.50 mm²	
Fine strand wires	0.20 to 1.50 mm²	0.20 to 2.50 mm²
With wire end sleeves	0.20 to 1.50 mm²	
Tightening torque	0.4 Nm	-
Electrical characteristics		
Nominal voltage	300 V	
Nominal current 4)	10 A / contact	
Contact resistance	≤5 mΩ	

Table 275: 0TB103.9, 0TB103.91 - Technical data

1) Yes, although applies only if all components installed within the complete system have this certification and the complete system itself carries the corresponding mark.
2) Yes, although applies only if all components installed within the complete system have this certification.
3) Cage clamp terminal blocks cannot be used side-by-side.
4) The limit data for each I/O module must be taken into consideration.

2 Terminal block ready relay

2.1 0TB2104.8000

2.1.1 General information

The 1-row 4-pin TB2104 terminal block is used for the 5AC901.IRDY-00 ready relay.

2.1.2 Order data

Model number	Short description	Figure
	Terminal blocks	
0TB2104.8000	Connector 24 VDC - 4-pin female - Screw clamps 2.5 mm²	

Table 276: 0TB2104.8000 - Order data

2.1.3 Technical data

Model number	0TB2104.8000
General information	
Certification	
CE	Yes
UL	cULus E115267 Industrial Control Equipment
Terminal block	
Note	Nominal values according to UL
Number of pins	4 (female)
Type of terminal block	Screw clamps
Cable type	Only copper wires (no aluminum wires!)
Distance between contacts	5.08 mm
Connection cross section	
AWG wire	26 to 14 AWG
Wire end sleeves with plastic covering	0.2 to 1.5 mm²
Solid wires	0.2 to 2.5 mm²
Fine strand wires	0.2 to 1.5 mm²
With wire end sleeves	0.2 to 1.5 mm²
Electrical characteristics	
Nominal voltage	300 V
Nominal current [1)]	10 A

Table 277: 0TB2104.8000 - Technical data

1) The limit data for each IF option must be taken into consideration.

3 Replacement CMOS batteries

3.1 0AC201.91 / 4A0006.00-000

3.1.1 General information

This lithium battery is needed to back BIOS CMOS data and the real-time clock (RTC).

The battery is subject to wear and must be replaced when the battery power is insufficient ("Bad" status).

3.1.2 Order data

Model number	Short description	Figure
	Batteries	
0AC201.91	Lithium batteries 4 pcs., 3 V / 950 mAh button cell We hereby state that the lithium cells contained in this shipment qualify as "partly regulated". Handle with care. If the package is damaged, inspect the cells, repack intact cells and protect cells against short circuits. For emergency information, call RENATA SA at + 41 61 319 28 27	
4A0006.00-000	Lithium battery, 3 V / 950 mAh, button cell	

Table 278: 0AC201.91, 4A0006.00-000 - Order data

3.1.3 Technical data

Warning!

The battery is only permitted to be replaced by a Renata CR2477N battery. The use of another battery may present a risk of fire or explosion.

The battery may explode if handled improperly. Do not recharge, disassemble or dispose of in fire.

Information:

The following characteristics, features and limit values only apply to this accessory and can deviate from those specified for the complete system. The data specifications for the complete system take precedence over those of individual components.

Model number	0AC201.91	4A0006.00-000
General information		
Storage time	Max. 3 years at 30°C	
Certification		
CE	Yes	
UL	cULus E115267 Industrial Control Equipment	
Electrical characteristics		
Capacity	950 mAh	
Self-discharging	<1% per year (at 23°C)	
Voltage range	3 V	
Environmental conditions		
Temperature		
Storage	-20 to 60°C	
Relative humidity		
Operation	0 to 95%	
Storage	0 to 95%	
Transport	0 to 95%	

Table 279: 0AC201.91, 4A0006.00-000 - Technical data

4 CFast cards

4.1 General information

CFast cards are data storage devices that are easy to exchange. Due to their robustness against environmental influences (e.g. temperature, shock, vibration, etc.), CFast cards are ideal for use as storage media in industrial environments.

CFast cards are a development derived from CompactFlash cards that use the SATA protocol instead. CFast cards are not compatible with CompactFlash cards.

4.2 Basic information

In order to be suited for use in industrial automation, CFast cards must be highly reliable. The following items are very important to achieving the necessary level of reliability:

- The flash technology used
- An efficient algorithm for maximizing service life
- Good mechanisms for detecting and fixing errors in the flash memory

4.2.1 Flash technology

CFast cards are currently available with MLC (multi-level cell) and SLC (single-level cell) flash blocks.

In addition to a service life that is 10 times longer than MLC flash components, SLC flash components also have write/delete cycles that are 33 times faster, making CFast cards with SLC flash components the preferred choice for industrial environments. These factors are still heavily dependent on the actual application, however, so that no blanket statement can be made.

Due to increasing cost pressure as well as improved wear level algorithms and monitoring features (S.M.A.R.T.), MLC flash technology is still widely used in this market.

4.2.2 Wear leveling

Wear leveling is an algorithm that can be used to maximize the service life of a CFast card. There are three different algorithms:

- Dynamic wear leveling
- Static wear leveling

The basic idea behind wear leveling is to distribute data over a broad area of blocks or cells on the disk so that the same areas are not deleted and rewritten over and over again.

4.2.2.1 Dynamic wear leveling

Dynamic wear leveling makes it possible to utilize unused flash blocks when writing to a file.
If the disk is 80% full with files, then only 20% can be used for wear leveling.
The service life of the CFast card is therefore dependent on the amount of unused flash blocks.

4.2.2.2 Static wear leveling

Static wear leveling monitors which data is rarely modified. From time to time, the controller then moves this data to blocks that have already been used frequently in order to prevent further wear on those cells.

4.2.3 ECC error correction

Bit errors can be caused by inactivity or when a certain cell is being operated. Error correction coding (ECC) implemented via hardware or software can detect and correct many errors of this type.

4.2.4 S.M.A.R.T. support

Self-Monitoring, Analysis and Reporting Technology (S.M.A.R.T.) is an industry standard for mass storage devices that has been introduced to monitor important parameters and quickly detect imminent failures. Critical performance and calibration data is monitored and stored in order to help predict the probability of errors.

4.2.5 Calculating the expected service life for an existing application

The following procedure can be used to better verify whether a CFast card with SLC or MLC technology should be used in a particular application.

- Read the "Average erase count" of the data storage device via S.M.A.R.T.
- Fully operate the system with the respective data storage device over a defined period of time (e.g. 1 week).
- Determine the number of erase cycles with "Average erase count".
- Determine the expected service life using the maximum guaranteed write/erase cycles (MLC: 3,000, SLC: 100,000).

Example of an MLC CFast card over the period of a week:

$$\text{Expected service life} = \frac{3000 * 1\ \text{week}}{\text{Completed erase cycles}}$$

4.2.6 Dimensions

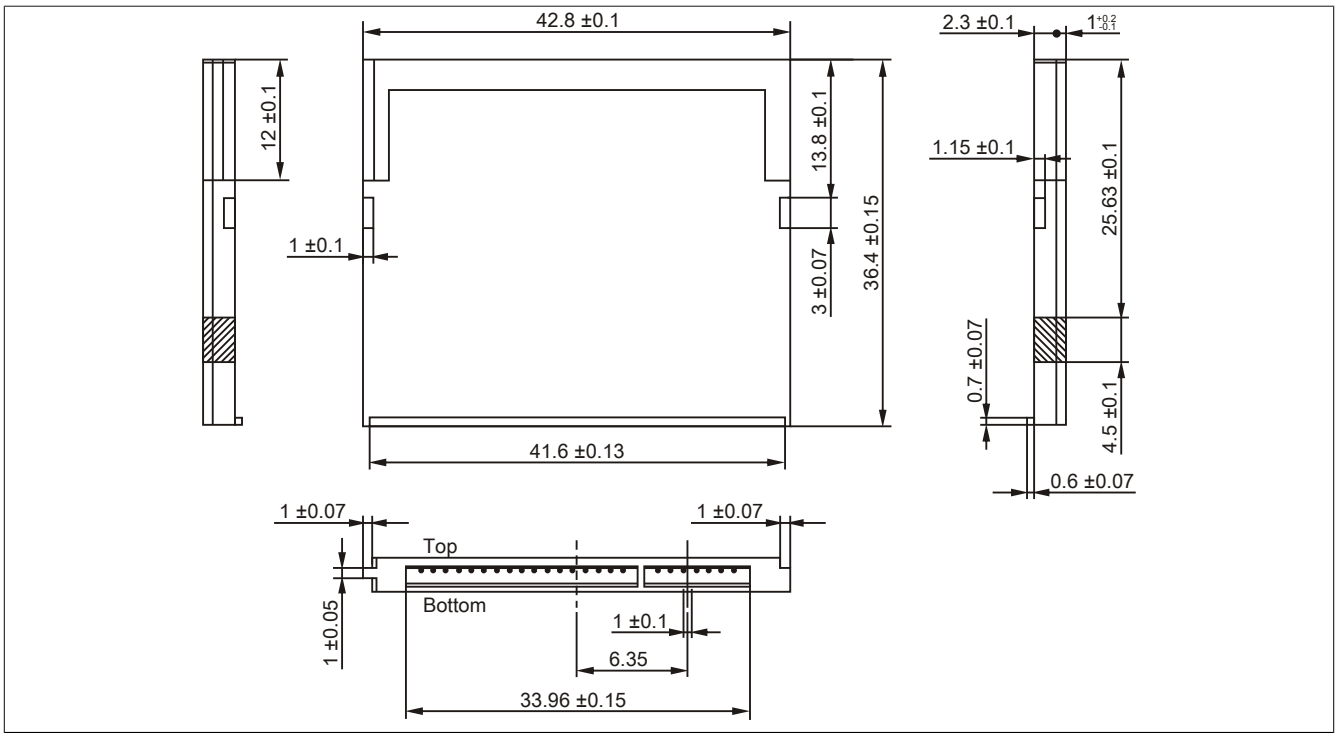

Figure 173: CFast card - Dimensions

4.3 5CFAST.xxxx-00

4.3.1 General information

CFast cards are based on single-level cell (SLC) technology and compatible with SATA 2.6. Their dimensions are identical to CompactFlash cards.

4.3.2 Order data

Model number	Short description	Figure
	CFast cards	
5CFAST.2048-00	CFast card, 2 GB SLC	
5CFAST.4096-00	CFast card, 4 GB SLC	
5CFAST.8192-00	CFast card, 8 GB SLC	
5CFAST.016G-00	CFast card, 16 GB SLC	
5CFAST.032G-00	CFast card, 32 GB SLC	

Table 280: 5CFAST.2048-00, 5CFAST.4096-00, 5CFAST.8192-00, 5CFAST.016G-00, 5CFAST.032G-00 - Order data

4.3.3 Technical data

Information:

Due to the changeover to the new controller, revision E0 may not be image-compatible to previous revisions when using older cloning tools. This is not the case when using current cloning tools.

Information:

The following characteristics, features and limit values only apply to this accessory and can deviate from those specified for the complete system. The data specifications for the complete system take precedence over those of individual components.

Product ID	5CFAST.2048-00 ≥ Rev. E0	5CFAST.4096-00 ≥ Rev. E0	5CFAST.8192-00 ≥ Rev. E0	5CFAST.016G-00 ≥ Rev. E0	5CFAST.032G-00 ≥ Rev. E0
General information					
Capacity	2 GB	4 GB	8 GB	16 GB	32 GB
Data retention	10 years				
Data reliability	<1 unrecoverable error in 10^{14} bit read accesses				
Lifetime monitoring	Yes				
MTBF	>2,500,000 hours (at 25°C)				
Maintenance	None				
Supported operating modes	SATA 2.6, max. PIO Mode 4, Multiword DMA Mode 2, Ultra DMA Mode 6				
Sequential read					
Typical					
With 128 kB block size	94 MB/s	108 MB/s	108 MB/s	108 MB/s	116 MB/s
With 4 kB block size	42 MB/s	46 MB/s	46 MB/s	46 MB/s	46 MB/s
Maximum					
With 128 kB block size	100 MB/s	115 MB/s	115 MB/s	115 MB/s	120 MB/s
With 4 kB block size	42 MB/s				
Sequential write					
Typical					
With 128 kB block size	57 MB/s	86 MB/s	86 MB/s	86 MB/s	111 MB/s
With 4 kB block size	36 MB/s	40 MB/s	40 MB/s	40 MB/s	40 MB/s
Maximum					
With 128 kB block size	65 MB/s	95 MB/s	95 MB/s	95 MB/s	120 MB/s
With 4 kB block size	40 MB/s	45 MB/s	45 MB/s	45 MB/s	45 MB/s

Table 281: 5CFAST.2048-00, 5CFAST.4096-00, 5CFAST.8192-00, 5CFAST.016G-00, 5CFAST.032G-00 - Technical data

Product ID	5CFAST.2048-00 ≥ Rev. E0	5CFAST.4096-00 ≥ Rev. E0	5CFAST.8192-00 ≥ Rev. E0	5CFAST.016G-00 ≥ Rev. E0	5CFAST.032G-00 ≥ Rev. E0
Certification					
CE	Yes				
UL	cULus E115267 Industrial Control Equipment				
HazLoc	cULus HazLoc E180196 Industrial Control Equipment for Hazardous Locations Class I, Division 2, Groups ABCD, T4[1)]				
DNV GL	Temperature: **B** (0 - 55°C) Humidity: **B** (up to 100%) Vibration: **A** (0.7g) EMC: **B** (Bridge and open deck)[2)]				
GOST-R	Yes				
Endurance					
SLC flash	Yes				
Guaranteed data volume					
Guaranteed [3)]	185 TBW	371 TBW	745 TBW	1468 TBW	2937 TBW
Clear/Write cycles					
Guaranteed	100,000				
Wear leveling	Static				
S.M.A.R.T. support	Yes				
Support					
Hardware	APC2100, APC910, PPC2100, PPC900				
Operating systems					
Windows 7 32-bit	No	No	No	Yes	Yes
Windows 7 64-bit	No	No	No	No	Yes
Windows Embedded Standard 7, 32-bit	No	No	No	Yes	Yes
Windows Embedded Standard 7, 64-bit	No	No	No	Yes	Yes
Windows XP Professional	No	Yes	Yes	Yes	Yes
Windows Embedded Standard 2009	Yes				
Software					
PVI Transfer	≥V4.0.0.8 (part of PVI Development Setup ≥V3.0.2.3014)				
B&R Embedded OS Installer	≥V3.10	≥V3.10	≥V3.10	≥V3.20	≥V3.21
Environmental conditions					
Temperature					
Operation	-40 to 85°C				
Storage	-50 to 100°C				
Transport	-50 to 100°C				
Relative humidity					
Operation	Max. 85% at 85°C				
Storage	Max. 85% at 85°C				
Transport	Max. 85% at 85°C				
Vibration					
Operation	10 to 2000 Hz: 20 g peak				
Storage	10 to 2000 Hz: 20 g peak				
Transport	10 to 2000 Hz: 20 g peak				
Shock					
Operation	1500 g peak, 0.5 ms				
Storage	1500 g peak, 0.5 ms				
Transport	1500 g peak, 0.5 ms				
Mechanical characteristics					
Dimensions					
Width	42.8 ±0.10 mm				
Length	36.4 ±0.10 mm				
Depth	3.6 ±0.10 mm				
Weight	10 g				

Table 281: 5CFAST.2048-00, 5CFAST.4096-00, 5CFAST.8192-00, 5CFAST.016G-00, 5CFAST.032G-00 - Technical data

1) Yes, although applies only if all components installed within the complete system have this certification and the complete system itself carries the corresponding mark.
2) Yes, although applies only if all components installed within the complete system have this certification.
3) TBW = Terabytes written.
Sequential access without a file system.

Product ID	5CFAST.2048-00 ≤ Rev. D0	5CFAST.4096-00 ≤ Rev. D0	5CFAST.8192-00 ≤ Rev. D0	5CFAST.016G-00 ≤ Rev. D0	5CFAST.032G-00 ≤ Rev. D0
General information					
Capacity	2 GB	4 GB	8 GB	16 GB	32 GB
Data retention	10 years				
Data reliability	<1 unrecoverable error in 10^{14} bit read accesses				
Lifetime monitoring	Yes				
MTBF	>2,500,000 hours (at 25°C)				
Maintenance	None				
Supported operating modes	SATA 2.6, max. PIO Mode 4, Multiword DMA Mode 2, Ultra DMA Mode 6				
Sequential read					
Typical					
With 128 kB block size	56 MB/s	107 MB/s	116 MB/s	116 MB/s	116 MB/s
With 4 kB block size	23 MB/s	26 MB/s	29 MB/s	29 MB/s	29 MB/s
Maximum					
With 128 kB block size	60 MB/s	110 MB/s	120 MB/s	120 MB/s	120 MB/s
With 4 kB block size	25 MB/s	30 MB/s	35 MB/s	35 MB/s	35 MB/s
Sequential write					
Typical					
With 128 kB block size	24 MB/s	49 MB/s	93 MB/s	93 MB/s	93 MB/s
With 4 kB block size	17 MB/s	19 MB/s	21 MB/s	21 MB/s	21 MB/s
Maximum					
With 128 kB block size	30 MB/s	55 MB/s	100 MB/s	100 MB/s	100 MB/s
With 4 kB block size	20 MB/s	25 MB/s	25 MB/s	25 MB/s	25 MB/s
Certification					
CE	Yes				
cULus	Yes				
cULus HazLoc Class 1 Division 2	Yes[1)]				
GOST-R	Yes				
GL	Yes[2)]				
Endurance					
SLC flash	Yes				
Guaranteed data volume					
Guaranteed [3)]	185 TBW	371 TBW	745 TBW	1468 TBW	2937 TBW
Clear/Write cycles					
Guaranteed	100,000				
Wear leveling	Static				
S.M.A.R.T. support	Yes				
Support					
Hardware	APC910, PPC900				
Operating systems					
Windows 7 32-bit	No	No	No	Yes	Yes
Windows 7 64-bit	No	No	No	No	Yes
Windows Embedded Standard 7, 32-bit	No	No	No	Yes	Yes
Windows Embedded Standard 7, 64-bit	No	No	No	Yes	Yes
Windows XP Professional	No	Yes	Yes	Yes	Yes
Windows Embedded Standard 2009	Yes				
Software					
PVI Transfer	≥V4.0.0.8 (part of PVI Development Setup ≥V3.0.2.3014)				
B&R Embedded OS Installer	≥V3.10	≥V3.10	≥V3.10	≥V3.20	≥V3.21
Environmental conditions					
Temperature					
Operation	0 to 70°C				
Storage	-50 to 100°C				
Transport	-50 to 100°C				
Relative humidity					
Operation	Max. 85% at 70°C				
Storage	Max. 85% at 70°C				
Transport	Max. 85% at 70°C				
Vibration					
Operation	10 to 2000 Hz: 20 g peak				
Storage	10 to 2000 Hz: 20 g peak				
Transport	10 to 2000 Hz: 20 g peak				
Shock					
Operation	1500 g peak, 0.5 ms				
Storage	1500 g peak, 0.5 ms				
Transport	1500 g peak, 0.5 ms				

Table 282: 5CFAST.2048-00, 5CFAST.4096-00, 5CFAST.8192-00, 5CFAST.016G-00, 5CFAST.032G-00 - Technical data

Product ID	5CFAST.2048-00 ≤ Rev. D0	5CFAST.4096-00 ≤ Rev. D0	5CFAST.8192-00 ≤ Rev. D0	5CFAST.016G-00 ≤ Rev. D0	5CFAST.032G-00 ≤ Rev. D0
Mechanical characteristics					
Dimensions					
Width	42.8 ±0.10 mm				
Length	36.4 ±0.10 mm				
Depth	3.6 ±0.10 mm				
Weight	10 g				

Table 282: 5CFAST.2048-00, 5CFAST.4096-00, 5CFAST.8192-00, 5CFAST.016G-00, 5CFAST.032G-00 - Technical data

1) Yes, although applies only if all components installed within the complete system have this certification and the complete system itself carries the corresponding mark.
2) Yes, although applies only if all components installed within the complete system have this certification.
3) TBW = Terabytes written.
Sequential access without a file system.

4.3.4 Temperature/Humidity diagram

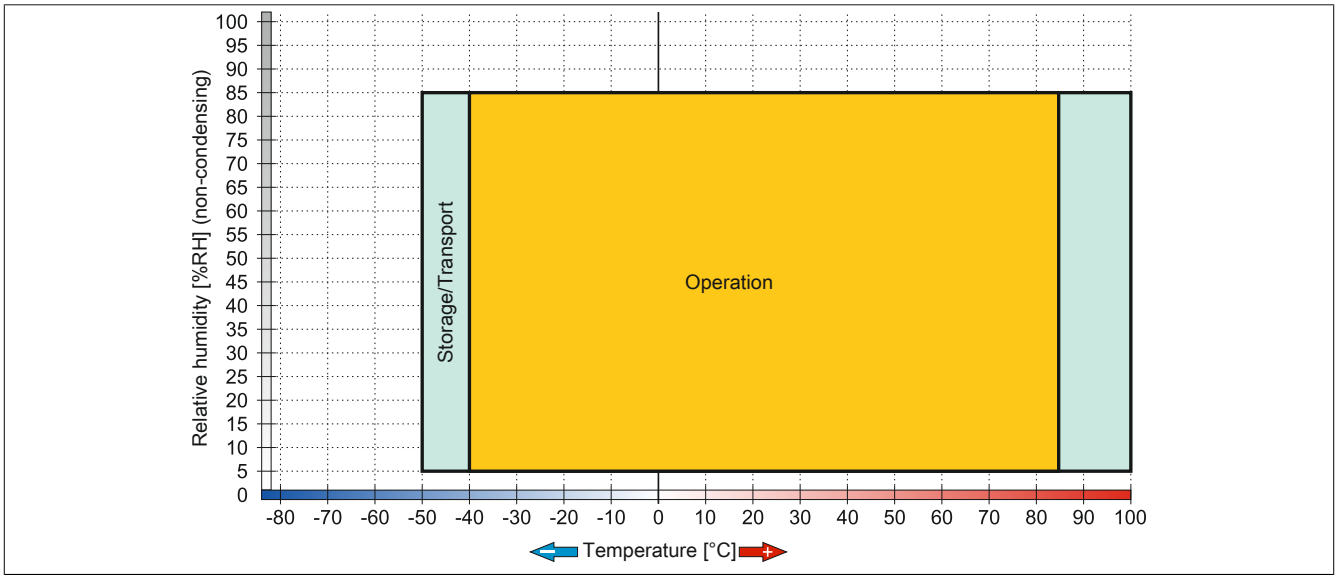

Figure 174: 5CFAST.xxxx-00 ≥ Rev. E0 - Temperature/Humidity diagram

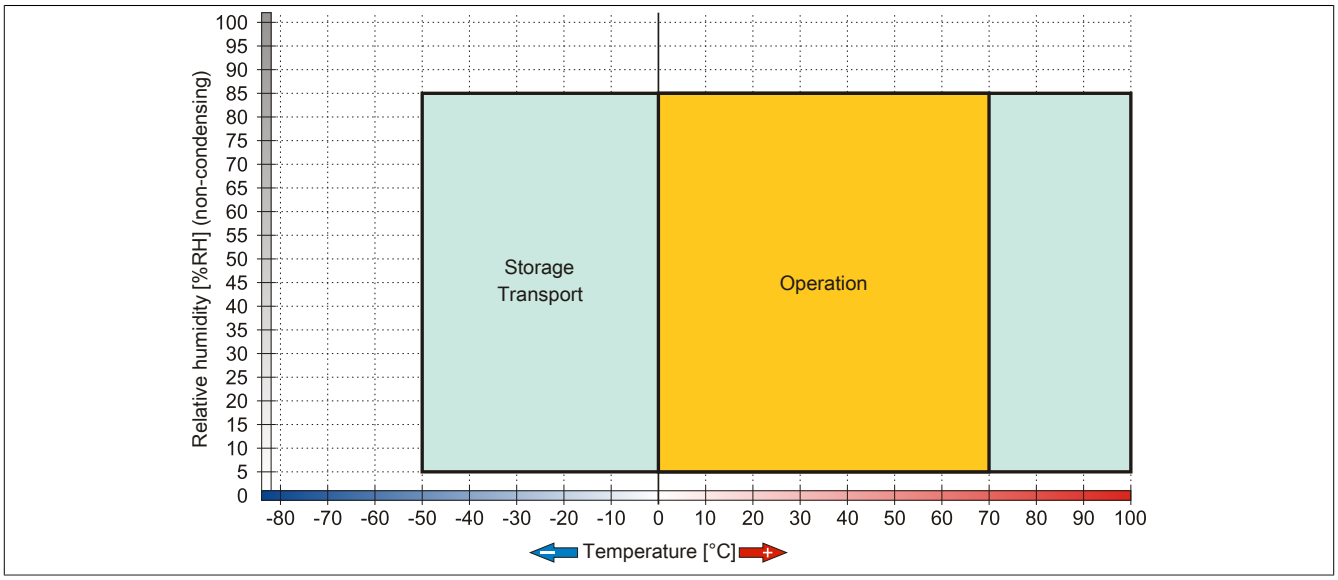

Figure 175: 5CFAST.xxxx-00 ≤ Rev. D0 - Temperature/Humidity diagram

4.4 5CFAST.xxxx-10

4.4.1 General information

CFast cards are based on multi-level cell (MLC) technology and compatible with SATA 3. Their dimensions are identical to CompactFlash cards.

4.4.2 Order data

Model number	Short description	Figure
	CFast cards	
5CFAST.032G-10	CFast card, 32 GB MLC	
5CFAST.064G-10	CFast card, 64 GB MLC	
5CFAST.128G-10	CFast card, 128 GB MLC	

Table 283: 5CFAST.032G-10, 5CFAST.064G-10, 5CFAST.128G-10 - Order data

4.4.3 Technical data

Information:

The following characteristics, features and limit values only apply to this accessory and can deviate from those specified for the complete system. The data specifications for the complete system take precedence over those of individual components.

Model number	5CFAST.032G-10	5CFAST.064G-10	5CFAST.128G-10
General information			
Capacity	32 GB	64 GB	128 GB
Data retention	10 years [1]		
Data reliability	<1 unrecoverable error in 10^{17} bit read accesses		
Lifetime monitoring	Yes		
MTBF	>3,000,000 hours (at 25°C)		
Maintenance	None		
Supported operating modes	SATA 3, SATA 2, SATA 1		
Sequential read			
Maximum	300 MB/s	310 MB/s	310 MB/s
Sequential write			
Maximum	75 MB/s	150 MB/s	150 MB/s
Certification			
CE	Yes		
UL	cULus E115267 Industrial Control Equipment		
HazLoc	cULus HazLoc E180196 Industrial Control Equipment for Hazardous Locations Class I, Division 2, Groups ABCD, T4[2]		
DNV GL	Temperature: **B** (0 - 55°C) Humidity: **B** (up to 100%) Vibration: **A** (0.7g) EMC: **B** (Bridge and open deck)[3]		
Endurance			
MLC flash	Yes		
Guaranteed data volume			
Guaranteed [4]	86.4 TBW	172.8 TBW	345.6 TBW
Clear/Write cycles			
Guaranteed	3000		
Wear leveling	Static		
Error correction coding (ECC)	Yes		
S.M.A.R.T. support	Yes		
Support			
Hardware	APC910, APC2100, PPC900, PPC2100		

Table 284: 5CFAST.032G-10, 5CFAST.064G-10, 5CFAST.128G-10 - Technical data

Model number	5CFAST.032G-10	5CFAST.064G-10	5CFAST.128G-10
Operating systems			
Windows 7 32-bit		Yes	
Windows 7 64-bit		Yes	
Windows Embedded Standard 7, 32-bit		Yes	
Windows Embedded Standard 7, 64-bit		Yes	
Windows XP Professional		Yes	
Windows Embedded Standard 2009		Yes	
Software			
PVI Transfer	≥ V4.0.20 or V4.1.5	≥ V4.0.20 or V4.1.5	≥V4.0.22 or V4.1.6
B&R Embedded OS Installer		≥V3.21	
Environmental conditions			
Temperature			
Operation		-40 to 85°C	
Storage		-55 to 95°C	
Transport		-55 to 95°C	
Relative humidity			
Operation		10 to 95%, non-condensing	
Storage		10 to 95%, non-condensing	
Transport		10 to 95%, non-condensing	
Vibration			
Operation		7 to 2000 Hz: 20 g peak	
Storage		7 to 2000 Hz: 20 g peak	
Transport		7 to 2000 Hz: 20 g peak	
Shock			
Operation		1500 g peak, 0.5 ms	
Storage		1500 g peak, 0.5 ms	
Transport		1500 g peak, 0.5 ms	
Mechanical characteristics			
Dimensions			
Width		42.8 ±0.10 mm	
Length		36.4 ±0.10 mm	
Depth		3.6 ±0.10 mm	
Weight		10 g	

Table 284: 5CFAST.032G-10, 5CFAST.064G-10, 5CFAST.128G-10 - Technical data

1) At 25°C ambient temperature at the start of service life.
2) Yes, although applies only if all components installed within the complete system have this certification and the complete system itself carries the corresponding mark.
3) Yes, although applies only if all components installed within the complete system have this certification.
4) TBW = Terabytes written.
Sequential access without a file system.

4.4.4 Temperature/Humidity diagram

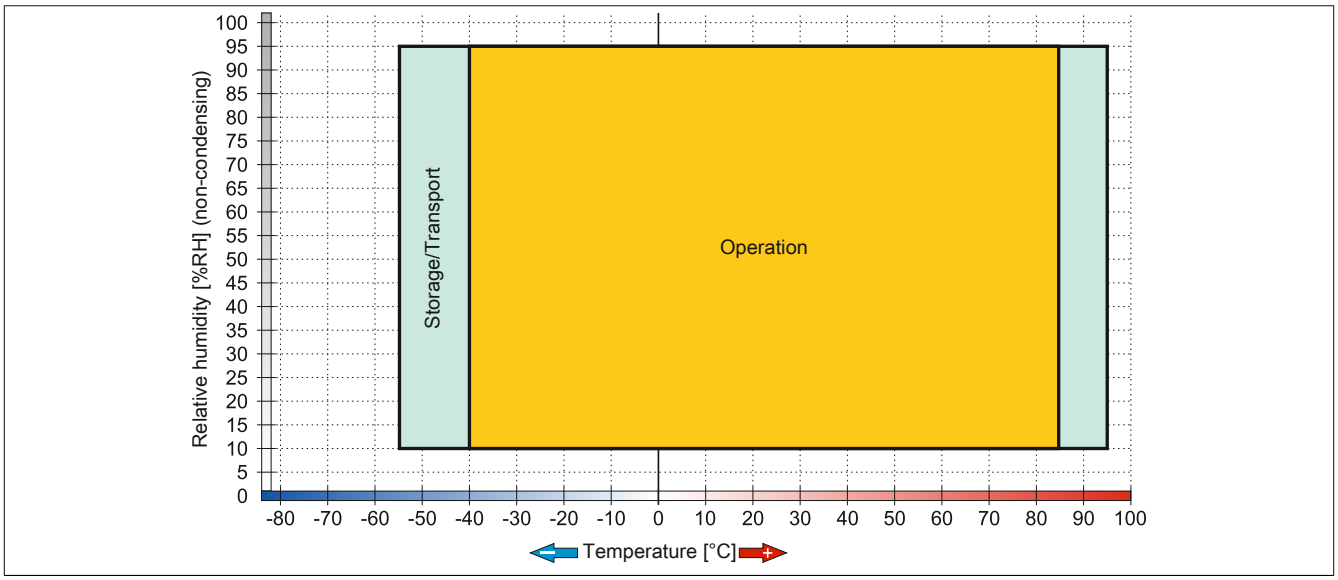

Figure 176: 5CFAST.xxxx-10 - Temperature/Humidity diagram

4.4.5 Write protection

Write protection can prevent data from being deleted or changed on the CFast card. If write protection is enabled, data can only be read.

Information:

If an operating system is installed on the CFast card, write protection must be disabled.

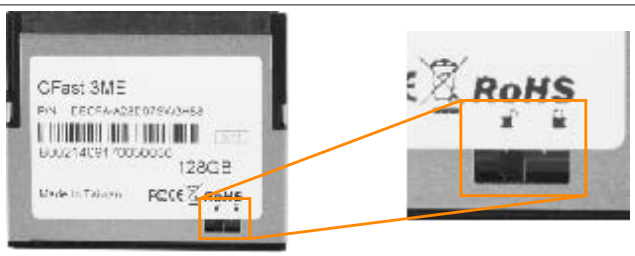

Disabled Enabled

5 PCIe plug-in cards

5.1 5ACPCE.ETH1-00

5.1.1 General information

This PCIe card has a 10/100/1000 Mbit/s network connection and can be used as an additional network interface in a standard single-width PCI Express slot.

- PCIe x1 Ethernet card
- 1x Ethernet interface (10/100/1000 Mbit/s)

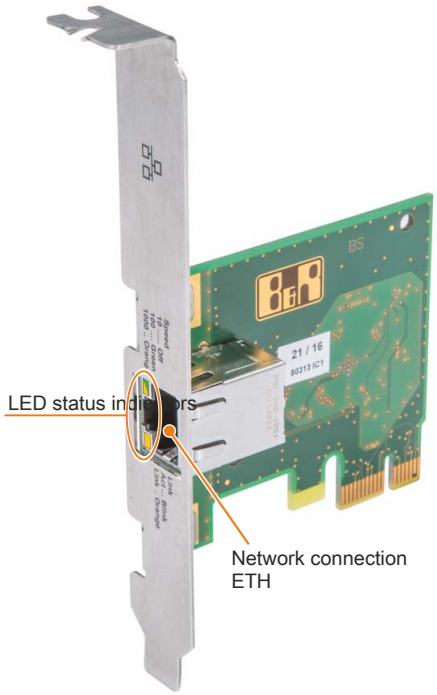

Figure 177: 5ACPCE.ETH1-00 - PCIe Ethernet card 10/100/1000

5.1.2 Order data

Model number	Short description	Figure
	Accessories	
5ACPCE.ETH1-00	PCIe carte - 1x ETH 10/100/1000 - For APC910/PPC900	

Table 285: 5ACPCE.ETH1-00 - Order data

5.1.3 Technical data

Model number	5ACPCE.ETH1-00
General information	
B&R ID code	DBF3
Diagnostics	
Data transfer	Yes, using LED status indicators

Table 286: 5ACPCE.ETH1-00 - Technical data

Model number	5ACPCE.ETH1-00
Interfaces	
Ethernet	
Quantity	1
Controller	Intel I210
Design	Shielded RJ45
Transfer rate	10/100/1000 Mbit/s [1]
Cable length	Max. 100 m between two stations (segment length)
Electrical characteristics	
Power consumption	1 W
Environmental conditions	
Temperature	
Operation	0 to 55°C
Storage	-20 to 60°C
Transport	-20 to 60°C
Relative humidity	
Operation	5 to 90%, non-condensing
Storage	5 to 95%, non-condensing
Transport	5 to 95%, non-condensing

Table 286: 5ACPCE.ETH1-00 - Technical data

1) Switching takes place automatically.

5.1.3.1 Ethernet interface

Information:

The following characteristics, features and limit values only apply to this individual component and can deviate from those specified for the complete system. For the complete system in which this individual component is used, refer to the data given specifically for that device.

Ethernet connection		
Controller	Intel I210	
Power supply	PCIe x1 for 3.3 V	
Cabling	S/STP (Cat 5e)	
Transfer rate	10/100/1000 Mbit/s[1]	
Cable length	Max. 100 m (min. Cat5e)	
LED	**On**	**Off**
Green	100 Mbit/s	10 Mbit/s[2]
Orange	Link (Ethernet network connection available)	Activity (blinking - data transfer in progress)

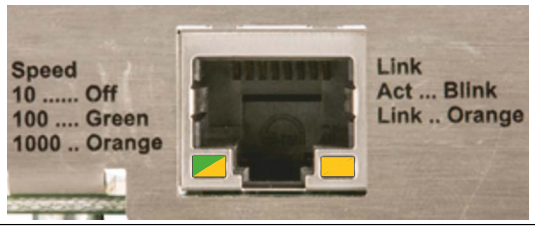

Table 287: 5ACPCIE.ETH1-00 - Ethernet interface

1) Switching takes place automatically.
2) The 10 Mbit/s transfer speed / connection only exists if the Link LED is also lit at the same time.

5.1.4 Driver support

A special driver is required in order to operate the Intel I210 Ethernet controller. Drivers for approved operating systems are available in the Downloads section of the B&R website www.br-automation.com. Approved operating systems include Windows 7, Windows 10 IoT Enterprise 2015 and B&R Debian 8.
Wake-on-LAN (WoL) and PXE booting are not supported.

Information:

Required drivers must be downloaded from the B&R website only, not from manufacturer websites.

5.1.5 Dimensions

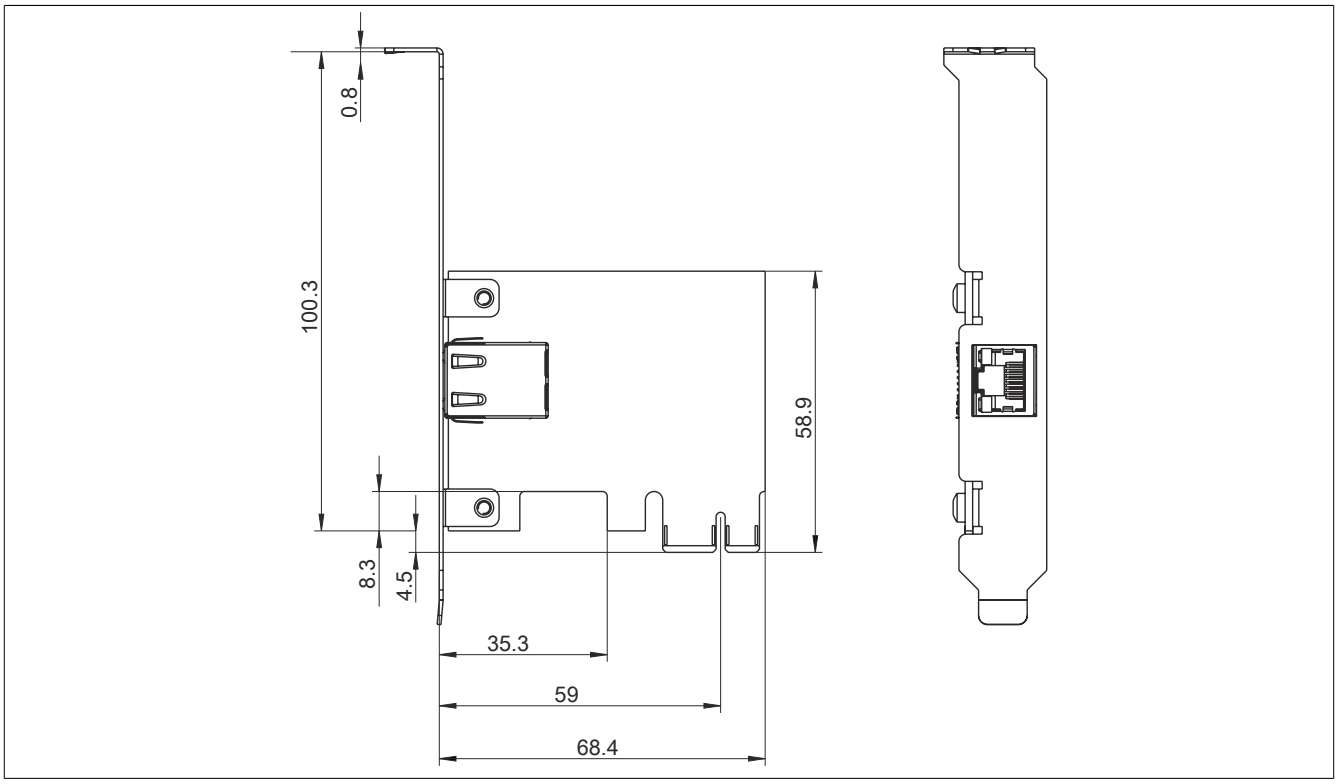

Figure 178: 5ACPCE.ETH1-00 - Dimensions

6 USB flash drives

6.1 5MMUSB.xxxx-01

6.1.1 General information

USB flash drives are data storage devices that are easy to exchange. Because of their high-speed data transfer (USB 2.0), USB flash drives are ideal for use as portable data storage. Without requiring additional drivers ("hot plugging", except in the case of Windows 98SE), the USB flash drive can immediately act as an additional drive for reading or writing data.

> **Information:**
>
> **Due to the large number of USB flash drives available on the market as well as their short product lifecycle, we reserve the right to supply alternative products at any time. The following measures may therefore be necessary in order to boot from these flash drives as well:**
>
> - **The flash drive must be reformatted or in some cases even repartitioned (set active partition).**
> - **The flash drive must be the first bootable device in the BIOS boot order; alternatively, the IDE controllers can be disabled in BIOS. This can be avoided in most cases if the "fdisk /mbr" command is additionally executed on the USB flash drive.**

6.1.2 Order data

Model number	Short description	Figure
	USB accessories	
5MMUSB.2048-01	USB 2.0 flash drive 2048 MB B&R	
5MMUSB.4096-01	USB 2.0 flash drive 4096 MB B&R	

Table 288: 5MMUSB.2048-01, 5MMUSB.4096-01 - Order data

6.1.3 Technical data

Model number	5MMUSB.2048-01	5MMUSB.4096-01
General information		
Capacity	2 GB	4 GB
LED status indicators	1 LED (green) [1)]	
MTBF	>3,000,000 hours	
Type	USB 1.1, USB 2.0	
Maintenance	None	
Default file system	FAT32	
Certification		
CE	Yes	
UL	Not relevant	
GOST-R	Yes	
Interfaces		
USB		
Type	USB 1.1, USB 2.0	
Connection	To any USB type A interface	
Transfer rate	Low speed (1.5 Mbit/s), full speed (12 Mbit/s), high speed (480 Mbit/s)	
Sequential reading	Full speed max. 1 MB/s, High speed max. 32 MB/s	
Sequential writing	Full speed max. 0.9 MB/s, High speed max. 23 MB/s	
Endurance		
SLC flash	Yes	
Data retention	>10 years	
Data reliability	<1 unrecoverable error in 10^{14} bit read accesses	
Connection cycles	>1500	

Table 289: 5MMUSB.2048-01, 5MMUSB.4096-01 - Technical data

Model number	5MMUSB.2048-01	5MMUSB.4096-01
Support		
Operating systems		
Windows 7	Yes	
Windows XP Professional	Yes	
Windows XP Embedded	Yes	
Windows ME	Yes	
Windows 2000	Yes	
Windows CE 5.0	Yes	
Windows CE 4.2	Yes	
Electrical characteristics		
Current consumption	Max. 500 µA sleep mode, max. 120 mA read/write	
Environmental conditions		
Temperature		
Operation	0 to 70°C	
Storage	-50 to 100°C	
Transport	-50 to 100°C	
Relative humidity		
Operation	85%, non-condensing	
Storage	85%, non-condensing	
Transport	85%, non-condensing	
Vibration		
Operation	20 to 2000 Hz: 20 g (peak)	
Storage	20 to 2000 Hz: 20 g (peak)	
Transport	20 to 2000 Hz: 20 g (peak)	
Shock		
Operation	Max. 1500 g (peak)	
Storage	Max. 1500 g (peak)	
Transport	Max. 1500 g (peak)	
Elevation		
Operation	Max. 3048 m	
Storage	Max. 12192 m	
Transport	Max. 12192 m	
Mechanical characteristics		
Dimensions		
Width	17.97 mm	
Length	67.85 mm	
Height	8.35 mm	

Table 289: 5MMUSB.2048-01, 5MMUSB.4096-01 - Technical data

1) Indicates data being transferred (sending and receiving).

6.1.4 Temperature/Humidity diagram

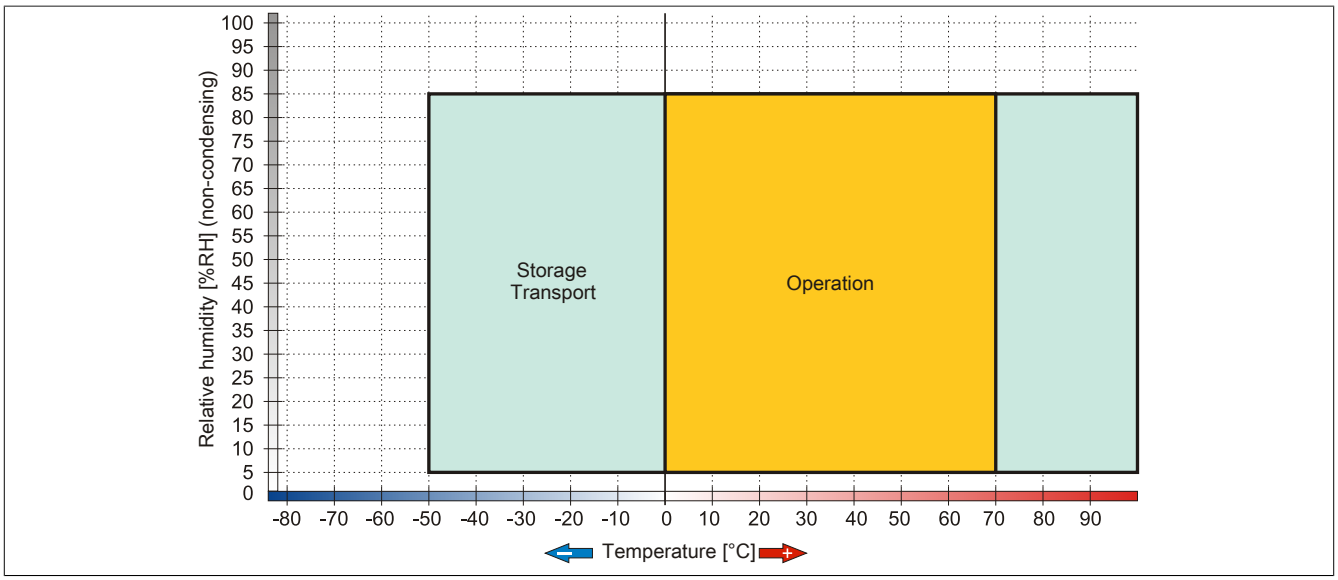

Figure 179: 5MMUSB.xxxx-01 - Temperature/Humidity diagram

7 USB media drive

7.1 5MD900.USB2-02

7.1.1 General information

The USB media drive is equipped with a DVD-R/RW DVD+R/RW drive, CompactFlash slot and one USB interface on both the front and back. It is connected to a USB interface on the B&R Industrial PC.

- Desktop or cabinet-mounted operation (mounting rail brackets)
- Integrated DVD-R/RW DVD+R/RW drive
- Integrated IDE/ATAPI CompactFlash slot (hot pluggable)
- Integrated USB 2.0 connection
- +24 VDC supply (back)
- USB 2.0 connection (back)
- Optional front cover

7.1.2 Order data

Model number	Short description	Figure
	USB accessories	
5MD900.USB2-02	USB 2.0 drive combination - DVD-R/RW, DVD+R/RW - CompactFlash slot	
	Required accessories	
	Accessories	
0TB103.9	Connector 24 VDC - 3-pin female - Screw clamp terminal block 3.31 mm²	
0TB103.91	Connector 24 VDC - 3-pin female - Cage clamp terminal block 3.31 mm²	
	Other	
5SWUTI.0000-00	OEM Nero CD-RW Software, only available with a CD writer.	
	USB cables	
5CAUSB.0018-00	USB 2.0 connection cable - Type A - Type B connector - 1.8 m	
5CAUSB.0050-00	USB 2.0 connection cable - Type A - Type B connector - 5 m	

Table 290: 5MD900.USB2-02 - Order data

7.1.3 Interfaces

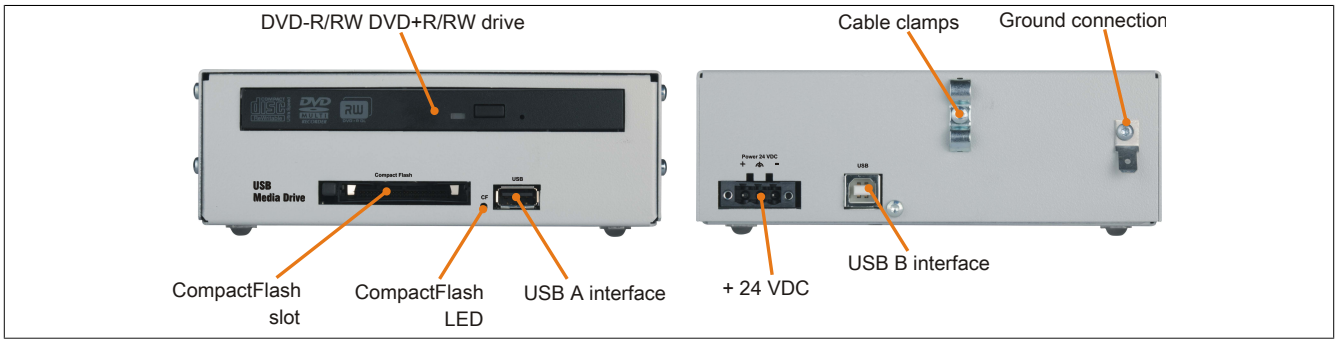

Figure 180: 5MD900.USB2-02 - Interfaces

7.1.4 Technical data

Model number	5MD900.USB2-02
General information	
Max. cable length	5 m (without hub)
Certification	
CE	Yes
UL	cULus E115267 Industrial Control Equipment
GOST-R	Yes
Interfaces	
CompactFlash slot 1	
Type	Type I
Connection	IDE/ATAPI
Activity LED	Signals read or write access to an inserted CompactFlash card

Table 291: 5MD900.USB2-02 - Technical data

Model number	5MD900.USB2-02
USB	
Type	USB 2.0
Design	Type A front Type B back
Transfer rate	Low speed (1.5 Mbit/s), full speed (12 Mbit/s), high speed (480 Mbit/s)
Current-carrying capacity	Max. 500 mA
CD / DVD drive	
Data buffer capacity	2 MB
Data transfer rate	Max. 33.3 MB/s
Speed	Max. 5090 rpm ±1%
Noise level	Approx. 45 dBA at a distance of 50 cm (full read access)
Compatible formats	CD-DA, CD-ROM mode 1/mode 2 CD-ROM XA mode 2 (form 1, form 2) Photo CD (single-/multi-session), Enhanced CD, CD text DVD-ROM, DVD-R, DVD-RW, DVD-Video DVD-RAM (4.7GB, 2.6GB) DVD+R, DVD+R (dual layer), DVD+RW
Laser class	Class 1 laser
Service life	60000 POH (power-on hours)
Interface	IDE (ATAPI)
Startup time	
CD	Max. 14 seconds (from 0 rpm to read operation)
DVD	Max. 15 seconds (from 0 rpm to read operation)
Access time	
CD	Typ. 140 ms (24x)
DVD	Typ. 150 ms (8x)
Readable media	
CD	CD/CD-ROM (12 cm, 8 cm), CD-R, CD-RW
DVD	DVD-ROM, DVD-R, DVD-RW. DVD-RAM, DVD+R, DVD+R (dual layer), DVD+RW
Writable media	
CD	CD-R, CD-RW
DVD	DVD-R/RW, DVD-RAM (4.7 GB), DVD+R/RW, DVD+R (dual layer)
Read speed	
CD	24x
DVD	8x
Write speed	
CD-R	10 to 24x
CD-RW	10 to 24x
DVD+R	3.3 to 8x
DVD+R (dual layer)	2.4 to 4x
DVD+RW	3.3 to 8x
DVD-R	2 to 6x
DVD-R (dual layer)	2 to 4x
DVD-RAM	3 to 5x
DVD-RW	2 to 6x
Write methods	
CD	Disk at once, session at once, packet write, track at once
DVD	Disk at once, incremental, overwrite, sequential
Electrical characteristics	
Nominal voltage	24 VDC ±25%, SELV [1)]
Overvoltage category in accordance with EN 61131-2	II
Operating conditions	
EN 60529 protection	Front: IP65 (only with optional front cover), back: IP20
Environmental conditions	
Temperature [2)]	
Operation	5 to 45°C
Storage	-20 to 60°C
Transport	-40 to 60°C
Relative humidity	
Operation	20 to 80%
Storage	5 to 90%
Transport	5 to 95%
Vibration	
Operation	5 to 500 Hz: 0.3 g (2.9 m/s² 0-peak)
Storage	10 to 100 Hz: 2 g (19.6 m/s² 0-peak)
Transport	10 to 100 Hz: 2 g (19.6 m/s² 0-peak)
Shock	
Operation	5 g, 11 ms
Storage	60 g, 11 ms
Transport	60 g, 11 ms
Elevation	
Operation	Max. 3000 m

Table 291: 5MD900.USB2-02 - Technical data

Model number	5MD900.USB2-02
Mechanical characteristics	
Dimensions	
Width	156 mm
Height	52 mm
Depth	140 mm
Weight	Approx. 1100 g (without front cover)

Table 291: 5MD900.USB2-02 - Technical data

1) EN 60950 requirements must be observed, see section "+24 VDC power supply" in the user's manual.
2) Temperature specifications refer to operation at 500 meters. The maximum ambient temperature is typically derated by 1°C per 1000 meters (starting at 500 meters above sea level).

7.1.5 Dimensions

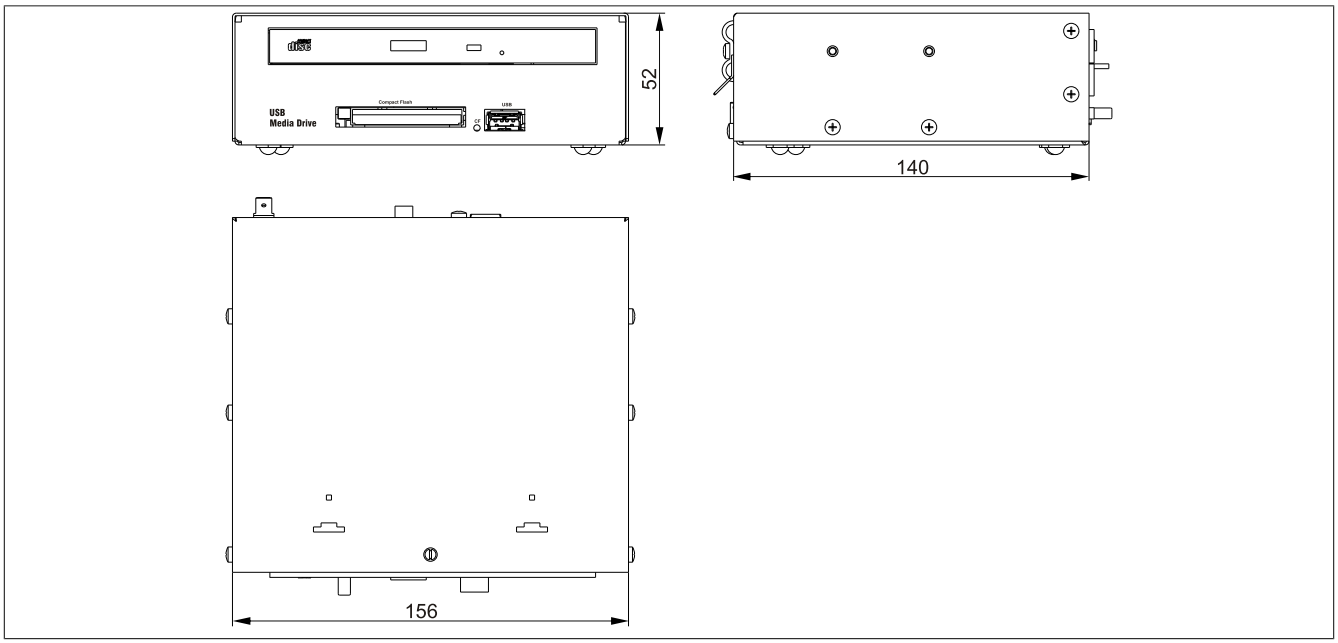

Figure 181: 5MD900.USB2-02 - Dimensions

7.1.6 Dimensions with front cover

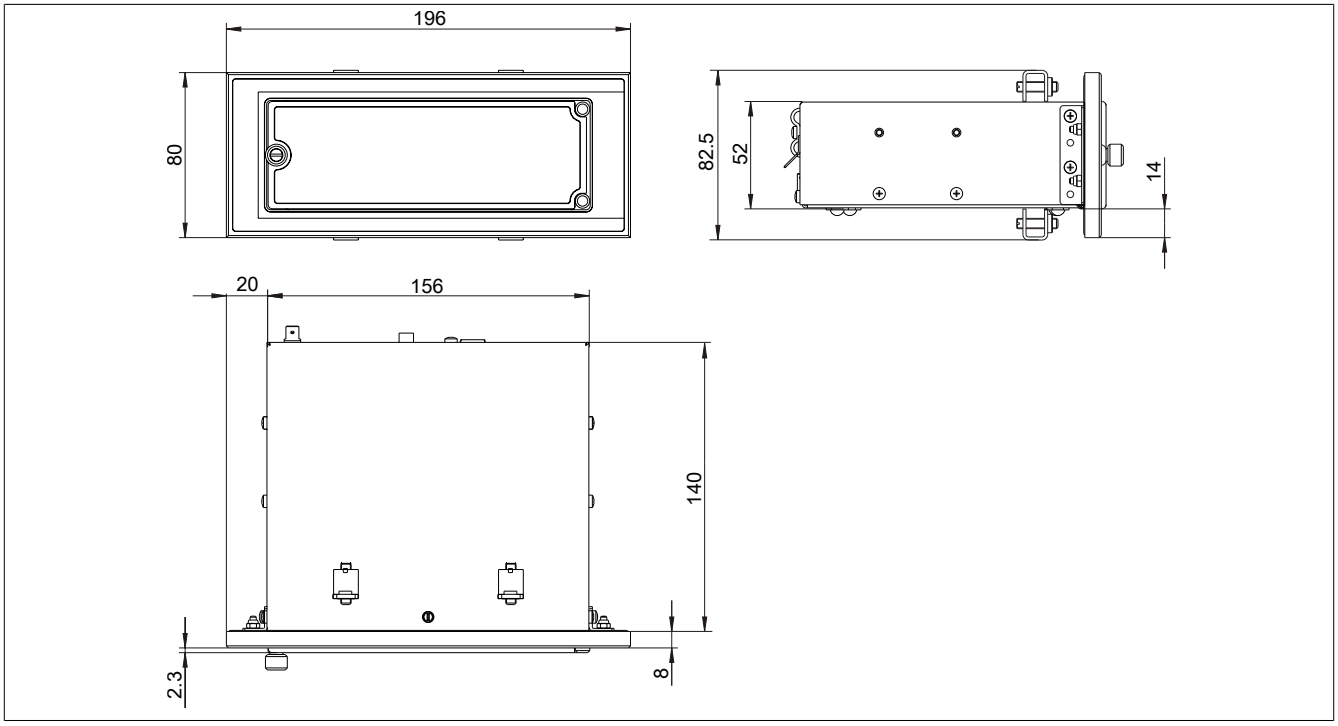

Figure 182: USB media drive with front cover - Dimensions

7.1.7 Cutout installation

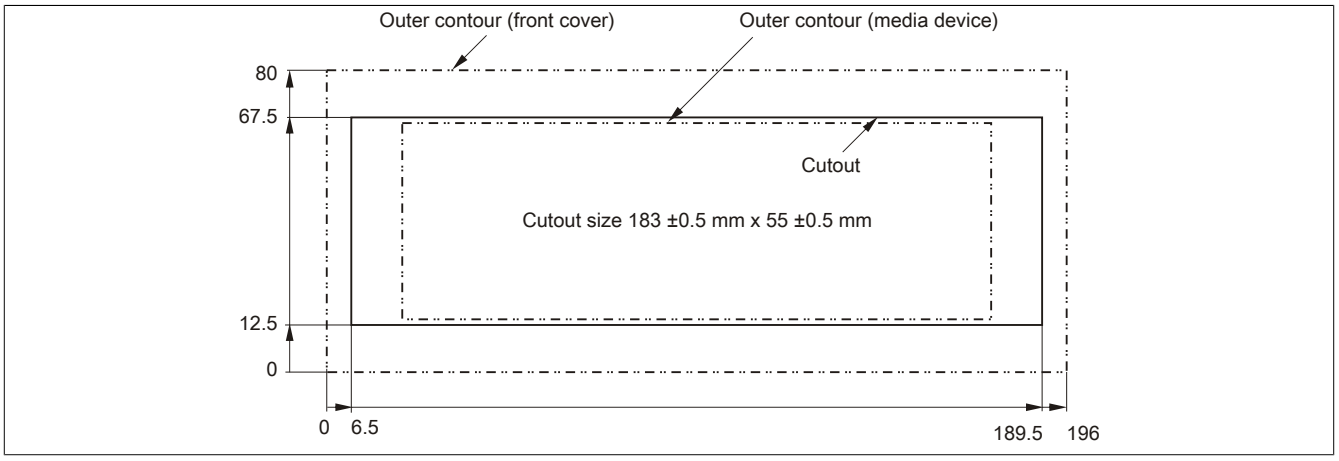

Figure 183: USB media drive with front cover - Installation cutout

7.1.8 Content of delivery

Quantity	Component
1	USB media drive
2	Mounting rail brackets

Table 292: 5MD900.USB2-02 - Content of delivery

7.1.9 Installation

The USB media drive can be operated as a desktop device (rubber feet) or cabinet-mounted device (2 mounting rail brackets included).

7.1.9.1 Mounting orientations

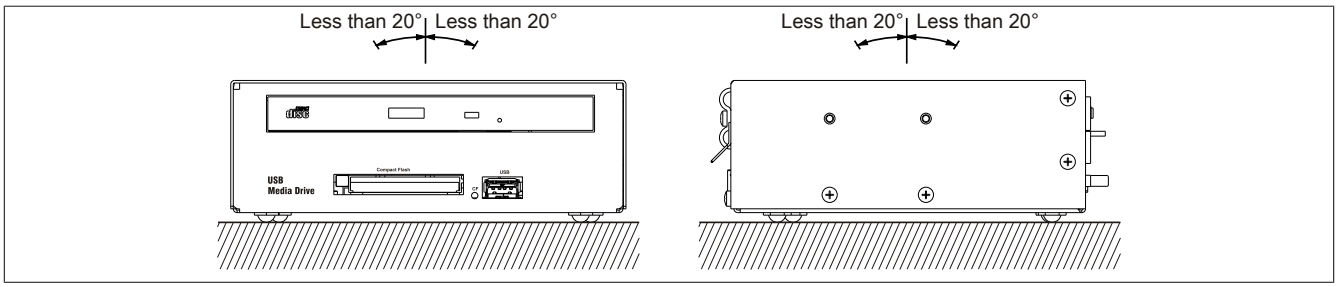

Figure 184: 5MD900.USB2-02 - Mounting orientation

7.2 5A5003.03

7.2.1 General information

This front cover can be mounted on the front of the USB media drive (model number 5MD900.USB2-00, 5MD900.USB2-01 or 5MD900.USB2-02) to protect the interface.

7.2.2 Order data

Model number	Short description	Figure
	USB accessories	
5A5003.03	Front cover for drives - 5A5003.02 - 5MD900.USB2	

Table 293: 5A5003.03 - Order data

7.2.3 Technical data

Model number	5A5003.03
General information	
Certification	
CE	Yes
UL	cULus E115267 Industrial Control Equipment
GOST-R	Yes
Mechanical characteristics	
Front	
Panel overlay	
Light background	Similar to Pantone 427CV
Dimensions	
Width	196 mm
Height	80 mm
Depth	8 mm

Table 294: 5A5003.03 - Technical data

7.2.4 Dimensions

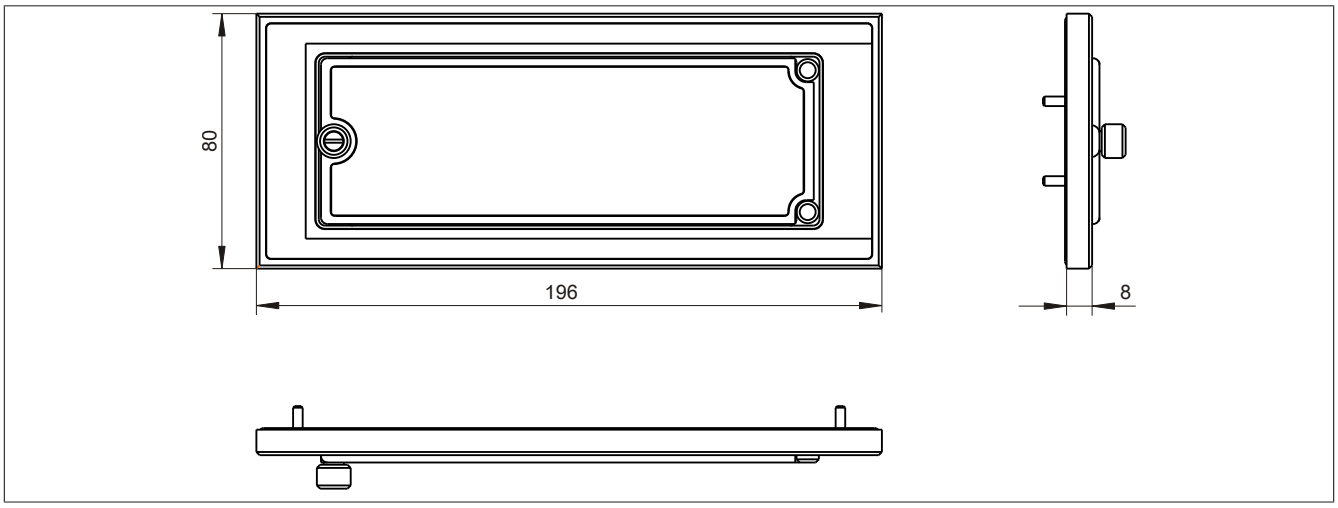

Figure 185: 5A5003.03 - Dimensions

7.2.5 Content of delivery

Quantity	Component
1	Front cover 5A5003.03 for the USB media drive
4	M3 locknut
4	Cover retaining clip

Table 295: 5A5003.03 - Content of delivery

7.2.6 Installation

The front cover is attached with 2 mounting rail brackets (included with the USB media drive) and 4 M3 locknuts. The 4 retaining clips provided can be used to mount the USB media drive and front cover as a whole, for example in a control cabinet door.

Installation

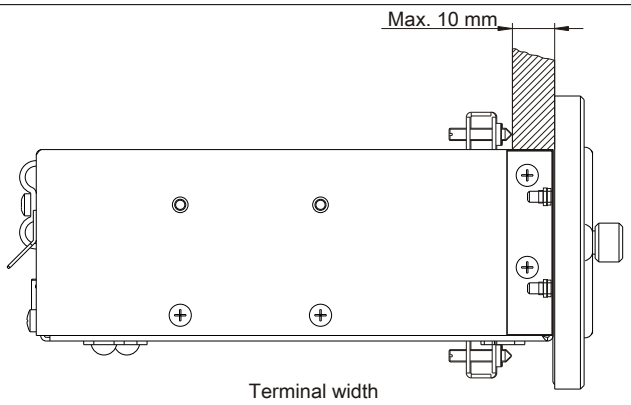

Figure 186: Front cover mounting and installation depth

7.2.6.1 Cutout installation

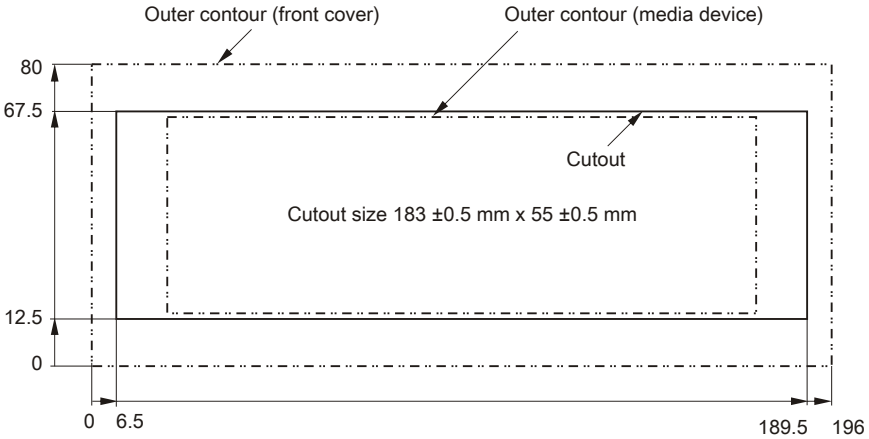

Figure 187: USB media drive with front cover - Installation cutout

8 Replacement disk tray

8.1 5AC901.FRAM-00

8.1.1 General information

The 5AC901.FRAM-00 replacement disk tray can be installed on the APC910 in order to exchange a slide-in compact drive as quickly as possible. It can be used to store the replacement drive.

8.1.2 Order data

Model number	Short description	Figure
	Accessories	
5AC901.FRAM-00	APC910 slide-in compact tray	

Table 296: 5AC901.FRAM-00 - Order data

8.1.3 Technical data

Model number	5AC901.FRAM-00
General information	
Certification	
CE	Yes
UL	Not relevant
Mechanical characteristics	
Dimensions	
Width	117 mm
Height	105.5 mm
Depth	17 mm

Table 297: 5AC901.FRAM-00 - Technical data

8.1.4 Dimensions

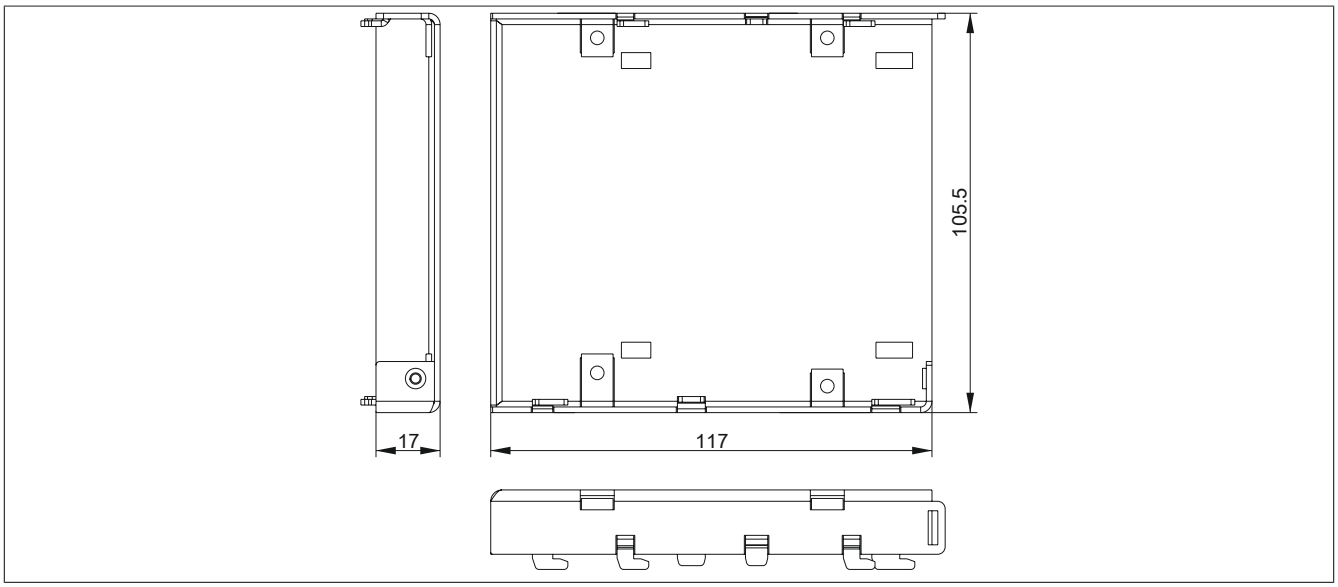

Figure 188: 5AC901.FRAM-00 - Dimensions

9 Cables

9.1 DVI cables

9.1.1 5CADVI.0xxx-00

9.1.1.1 General information

5CADVI.0xxx-00 DVI cables are designed for use in inflexible applications.

> **Caution!**
>
> **Power must be disconnected before connecting or disconnecting cables.**

9.1.1.2 Order data

Model number	Short description	Figure
	DVI cables	
5CADVI.0018-00	DVI-D cable - 1.8 m	
5CADVI.0050-00	DVI-D cable - 5 m	
5CADVI.0100-00	DVI-D cable - 10 m	

Table 298: 5CADVI.0018-00, 5CADVI.0050-00, 5CADVI.0100-00 - Order data

9.1.1.3 Technical data

Model number	5CADVI.0018-00	5CADVI.0050-00	5CADVI.0100-00
General information			
Certification			
CE	Yes		
UL	cULus E115267 Industrial Control Equipment		
DNV GL	Environmental Category C, EMC1[1]		
DNV GL	Temperature: **B** (0 - 55°C) Humidity: **B** (up to 100%) Vibration: **A** (0.7g) EMC: **B** (Bridge and open deck)[1]		
GOST-R	Yes		
Cable construction			
Wire cross section	AWG 28		
Shield	Individual cable pairs, entire cable		
Complete shielding	Tinned copper braiding, optical coverage >86%		
Outer sheathing			
Material	PVC		
Color	Beige		
Labeling	AWM STYLE 20276 80°C 30V VW1 DVI DIGITAL SINGLE LINK DER AN		
Connector			
Type	2x DVI-D (18+1), male		
Connection cycles	100		
Locating screw tightening torque	Max. 0.5 Nm		
Electrical characteristics			
Conductor resistance	Max. 237 Ω/km		
Insulation resistance	Min. 100 MΩ/km		
Mechanical characteristics			
Dimensions			
Length	1.8 m ±50 mm	5 m ±80 mm	10 m ±100 mm
Diameter	Max. 8.5 mm		
Bend radius	≥5x cable diameter (male connector - ferrite bead and ferrite bead - ferrite bead)		
Weight	Approx. 260 g	Approx. 460 g	Approx. 790 g

Table 299: 5CADVI.0018-00, 5CADVI.0050-00, 5CADVI.0100-00 - Technical data

1) Yes, although applies only if all components installed within the complete system have this certification.

9.1.1.4 Bend radius specifications

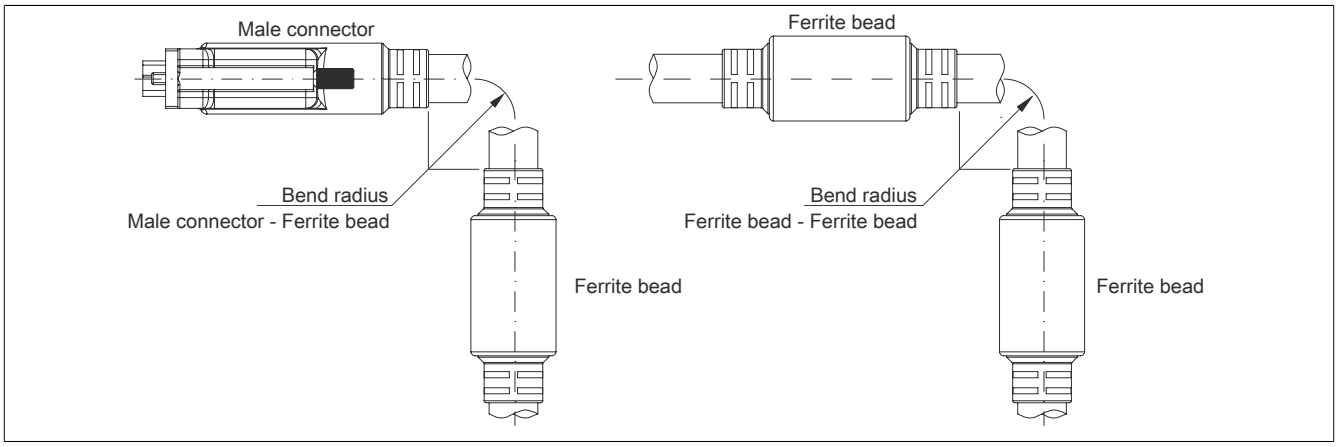

Figure 189: Bend radius specifications

9.1.1.5 Dimensions

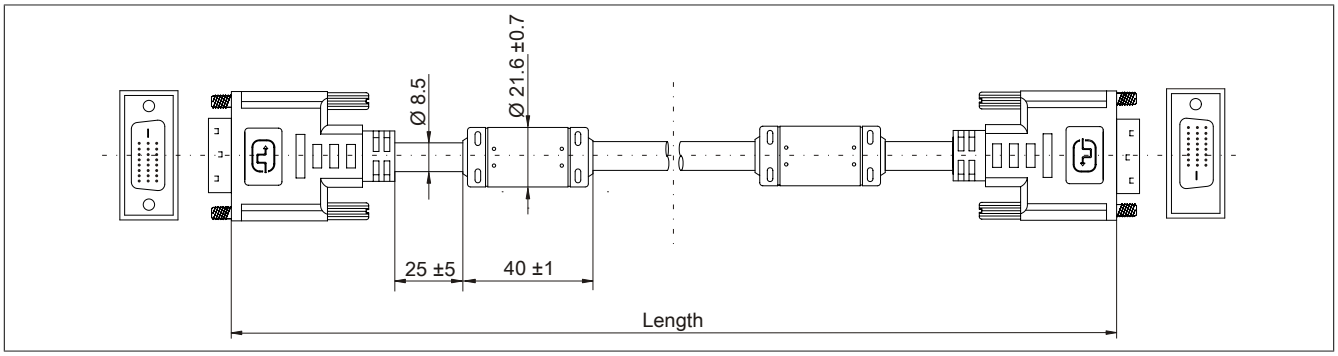

Figure 190: 5CADVI.0xxx-00 - Dimensions

9.1.1.6 Cable pinout

Warning!

Field-assembled cables must be wired according to these specifications.

If a field-assembled cable is used, B&R cannot guarantee that it will function properly. All cables provided by B&R are guaranteed to function properly, however.

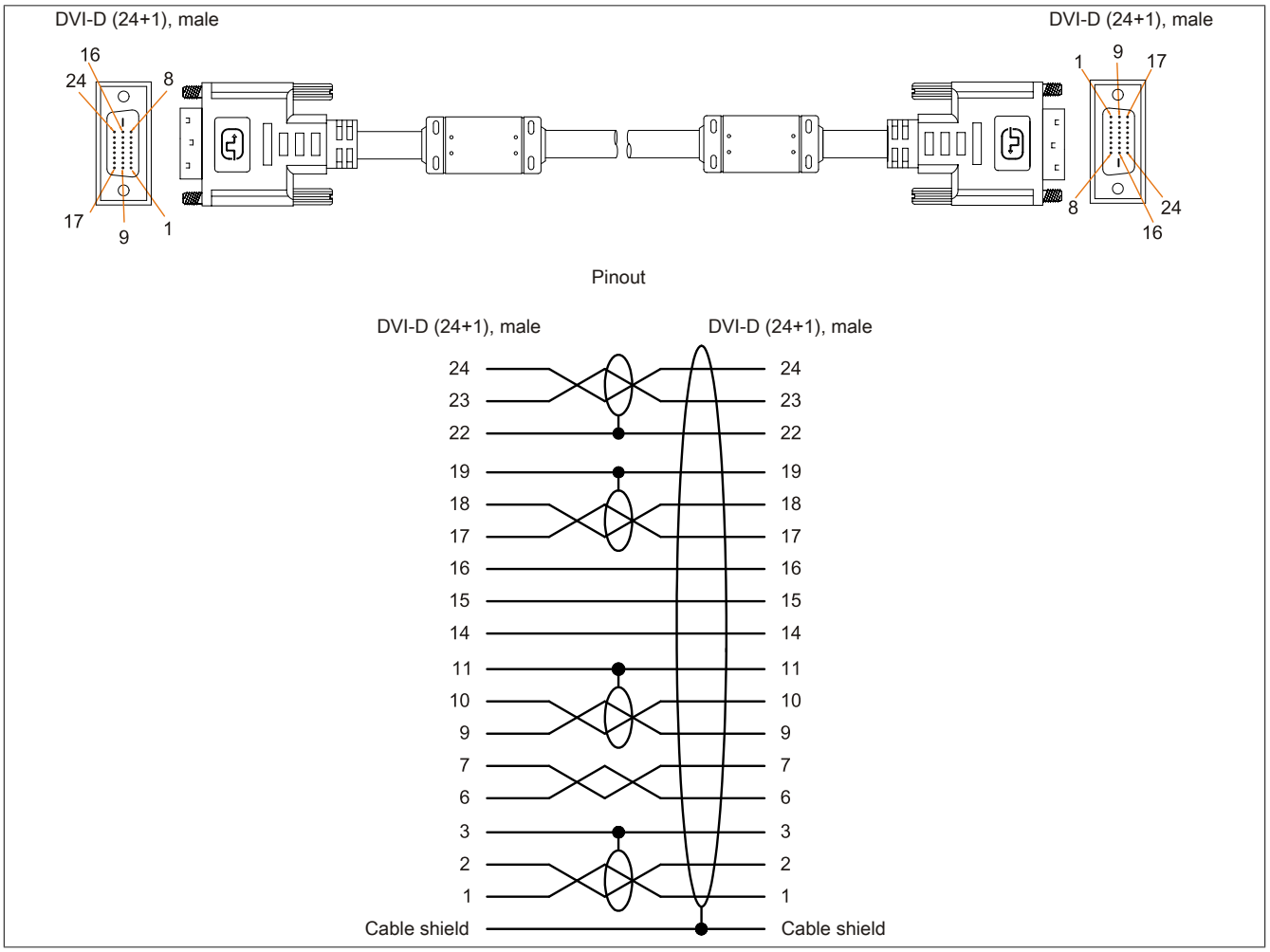

Figure 191: 5CADVI.0xxx-00 - Pinout

9.2 SDL cables

9.2.1 5CASDL.0xxx-00

9.2.1.1 General information

5CASDL.0xxx-00 SDL cables are designed for use in inflexible applications. 5CASDL.0xxx-03 SDL flex cables are required for flexible applications (e.g. swing arm systems).

Only 5CASDL.0xxx-00 SDL cables are permitted to be used for the Automation Panel 9xD with SDL receiver.

> **Caution!**
>
> **Power must be disconnected before connecting or disconnecting cables.**

9.2.1.2 Order data

Model number	Short description	Figure
	SDL cables	
5CASDL.0008-00	SDL cable - 0.8 m	
5CASDL.0018-00	SDL cable - 1.8 m	
5CASDL.0050-00	SDL cable - 5 m	
5CASDL.0100-00	SDL cable - 10 m	
5CASDL.0150-00	SDL cable - 15 m	
5CASDL.0200-00	SDL cable - 20 m	
5CASDL.0250-00	SDL cable - 25 m	
5CASDL.0300-00	SDL cable - 30 m	

Table 300: 5CASDL.0008-00, 5CASDL.0018-00, 5CASDL.0050-00, 5CASDL.0100-00, 5CASDL.0150-00, 5CASDL.0200-00, 5CASDL.0250-00, 5CASDL.0300-00 - Order data

9.2.1.3 Technical data

Model number	5CASDL. 0008-00	5CASDL. 0018-00	5CASDL. 0050-00	5CASDL. 0100-00	5CASDL. 0150-00	5CASDL. 0200-00	5CASDL. 0250-00	5CASDL. 0300-00
General information								
Certification								
CE	Yes							
UL	cULus E115267 Industrial Control Equipment							
HazLoc	cULus HazLoc E180196 Industrial Control Equipment for Hazardous Locations Class I, Division 2, Groups ABCD, T4[1]					-		
DNV GL	Environmental Category C, EMC1[2]							
DNV GL	Temperature: **B** (0 - 55°C) Humidity: **B** (up to 100%) Vibration: **A** (0.7g) EMC: **B** (Bridge and open deck)[2]							
GOST-R	-	Yes						
Cable construction								
Wire cross section	AWG 28			AWG 24				
Shield	Individual cable pairs, entire cable							
Complete shielding	Tinned copper braiding, optical coverage >85%							
Outer sheathing								
Material	PVC							
Color	Black							
Labeling	E74020-C (UL) AWM STYLE 20176 80°C 30V VW-1 DVI DIGITAL LINK							
Connector								
Type	2x DVI-D (24+1), male							
Connection cycles	100							
Contacts	Gold-plated							
Mechanical protection	Metal cover with crimped stress relief							
Locating screw tightening torque	Max. 0.5 Nm							
Electrical characteristics								
Conductor resistance								
AWG 24	-			≤93 Ω/km				
AWG 28	≤237 Ω/km			-				
Insulation resistance	Min. 10 MΩ/km							

Table 301: 5CASDL.0008-00, 5CASDL.0018-00, 5CASDL.0050-00, 5CASDL.0100-00, 5CASDL.0150-00, 5CASDL.0200-00, 5CASDL.0250-00, 5CASDL.0300-00 - Technical data

Model number	5CASDL. 0008-00	5CASDL. 0018-00	5CASDL. 0050-00	5CASDL. 0100-00	5CASDL. 0150-00	5CASDL. 0200-00	5CASDL. 0250-00	5CASDL. 0300-00
Mechanical characteristics								
Dimensions								
Length	0.8 m ±25 mm	1.8 m ±30 mm	5 m ±30 mm	10 m ±50 mm	15 m ±100 mm	20 m ±100 mm	25 m ±100 mm	30 m ±100 mm
Diameter	Typ. 8.6 ±0.2 mm Max. 9 mm			Typ. 11 ±0.2 mm Max. 11.5 mm				
Bend radius	≥5x cable diameter (male connector - ferrite bead and ferrite bead - ferrite bead)							
Flexibility	Limited flexibility, valid for ferrite bead - ferrite bead (tested 100 cycles with 5x cable diameter, 20 cycles/minute)							
Weight	Approx. 206 g	Approx. 300 g	Approx. 580 g	Approx. 1500 g	Approx. 2250 g	Approx. 2880 g	Approx. 4800 g	Approx. 5520 g

Table 301: 5CASDL.0008-00, 5CASDL.0018-00, 5CASDL.0050-00, 5CASDL.0100-00, 5CASDL.0150-00, 5CASDL.0200-00, 5CASDL.0250-00, 5CASDL.0300-00 - Technical data

1) Yes, although applies only if all components installed within the complete system have this certification and the complete system itself carries the corresponding mark.
2) Yes, although applies only if all components installed within the complete system have this certification.

9.2.1.4 Bend radius specifications

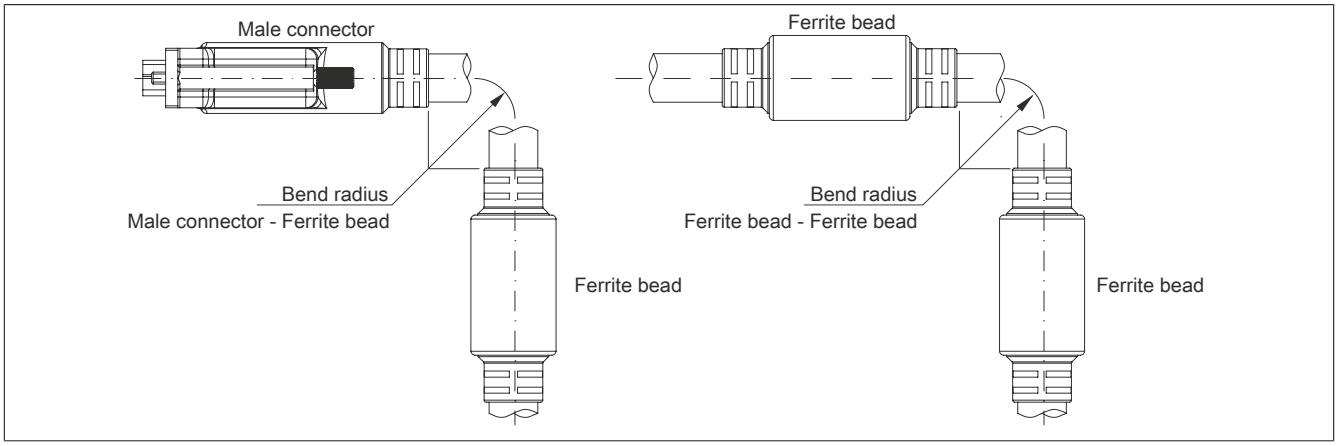

Figure 192: Bend radius specifications

9.2.1.5 Dimensions

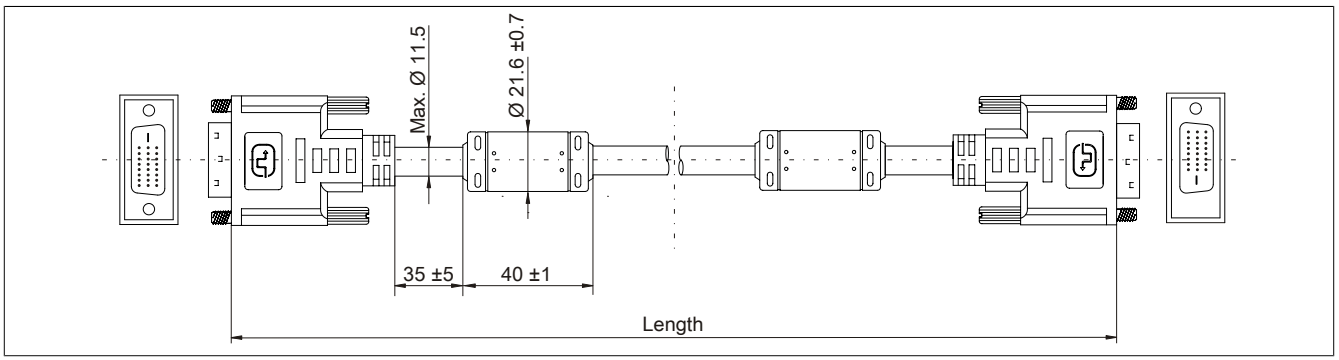

Figure 193: 5CASDL.0xxx-00- Dimensions

9.2.1.6 Cable pinout

Warning!

Field-assembled cables must be wired according to these specifications.

If a field-assembled cable is used, B&R cannot guarantee that it will function properly. All cables provided by B&R are guaranteed to function properly, however.

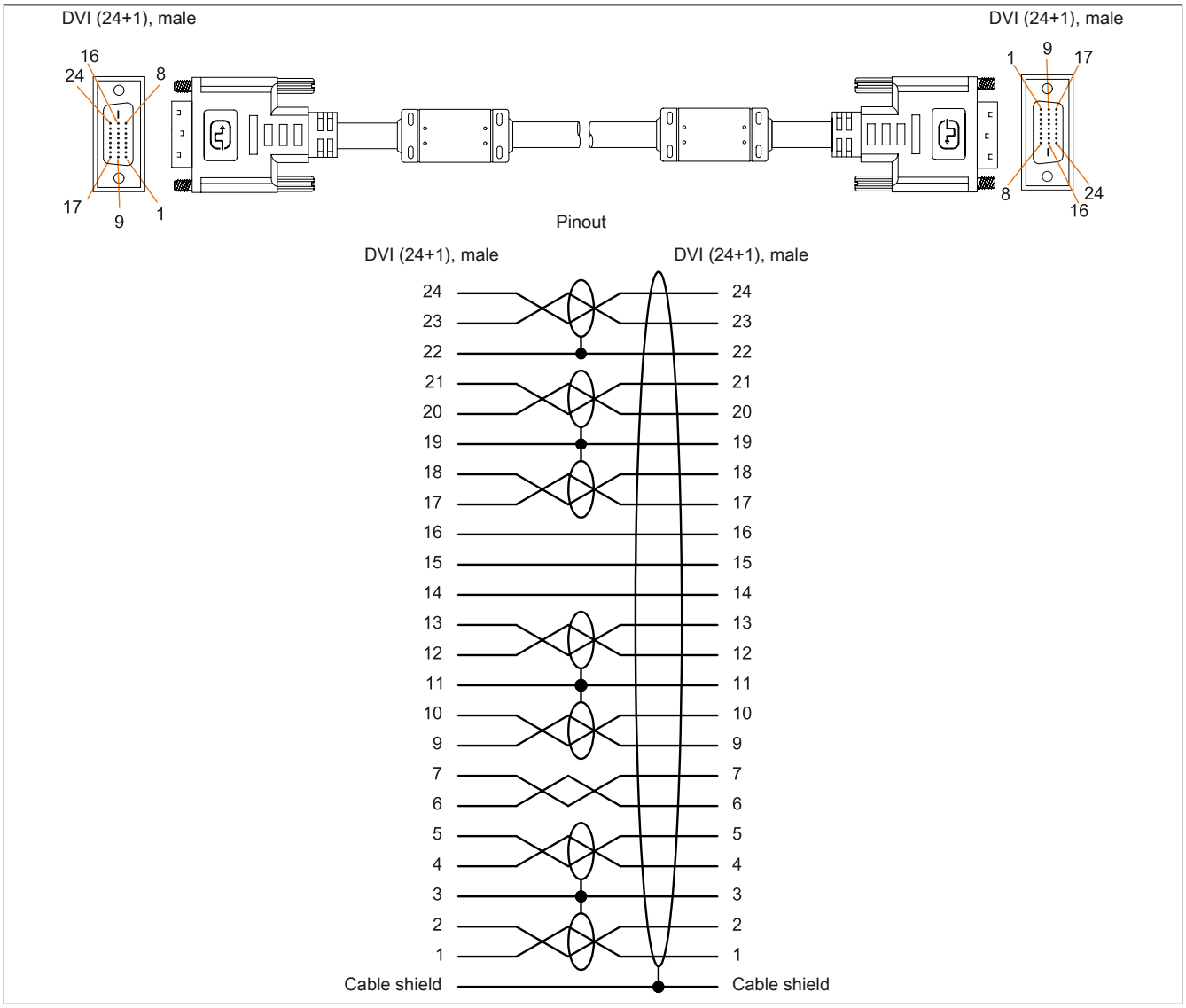

Figure 194: 5CASDL.0xxx-00 - Pinout

9.3 SDL cables with 45° male connector

9.3.1 5CASDL.0xxx-01

9.3.1.1 General information

5CASDL.0xxx-01 SDL cables with 45° connector are designed for use in inflexible applications.

Caution!

Power must be disconnected before connecting or disconnecting cables.

9.3.1.2 Order data

Model number	Short description	Figure
	SDL cable 45° connectors	
5CASDL.0018-01	SDL cable - 45 degree connector - 1.8 m	
5CASDL.0050-01	SDL cable - 45 degree connector - 5 m	
5CASDL.0100-01	SDL cable - 45 degree connector - 10 m	
5CASDL.0150-01	SDL cable - 45 degree connector - 15 m	

Table 302: 5CASDL.0018-01, 5CASDL.0050-01, 5CASDL.0100-01, 5CASDL.0150-01 - Order data

9.3.1.3 Technical data

Model number	5CASDL.0018-01	5CASDL.0050-01	5CASDL.0100-01	5CASDL.0150-01
General information				
Certification				
CE	Yes			
UL	cULus E115267 Industrial Control Equipment			
HazLoc	cULus HazLoc E180196 Industrial Control Equipment for Hazardous Locations Class I, Division 2, Groups ABCD, T4[1]			-
DNV GL	Environmental Category C, EMC1[2]			
DNV GL	Temperature: **B** (0 - 55°C) Humidity: **B** (up to 100%) Vibration: **A** (0.7g) EMC: **B** (Bridge and open deck)[2]			
GOST-R	Yes			
Cable construction				
Wire cross section	AWG 28		AWG 24	
Shield	Individual cable pairs, entire cable			
Complete shielding	Tinned copper braiding, optical coverage >85%			
Outer sheathing				
Material	PVC			
Color	Black			
Connector				
Type	2x DVI-D (24+1), male			
Connection cycles	100			
Contacts	Gold-plated			
Mechanical protection	Metal cover with crimped stress relief			
Locating screw tightening torque	Max. 0.5 Nm			
Electrical characteristics				
Conductor resistance				
AWG 24	-		≤93 Ω/km	
AWG 28	≤237 Ω/km		-	
Insulation resistance	Min. 10 MΩ/km			
Mechanical characteristics				
Dimensions				
Length	1.8 m ±30 mm	5 m ±50 mm	10 m ±100 mm	15 m ±100 mm
Diameter	Max. 9 mm		Max. 11.5 mm	
Bend radius				
Fixed installation	≥5x cable diameter (male connector - ferrite bead and ferrite bead - ferrite bead)			
Flexibility	Limited flexibility, valid for ferrite bead - ferrite bead (tested 100 cycles with 5x cable diameter, 20 cycles/minute)			
Weight	Approx. 300 g	Approx. 590 g	Approx. 2800 g	Approx. 2860 g

Table 303: 5CASDL.0018-01, 5CASDL.0050-01, 5CASDL.0100-01, 5CASDL.0150-01 - Technical data

1) Yes, although applies only if all components installed within the complete system have this certification and the complete system itself carries the corresponding mark.
2) Yes, although applies only if all components installed within the complete system have this certification.

9.3.1.4 Bend radius specifications

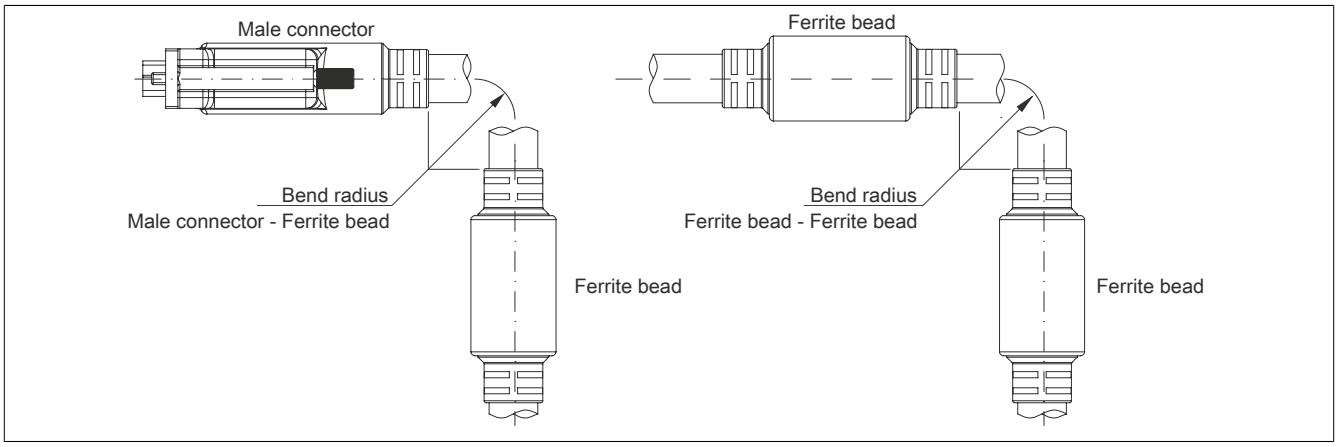

Figure 195: Bend radius specifications

9.3.1.5 Dimensions

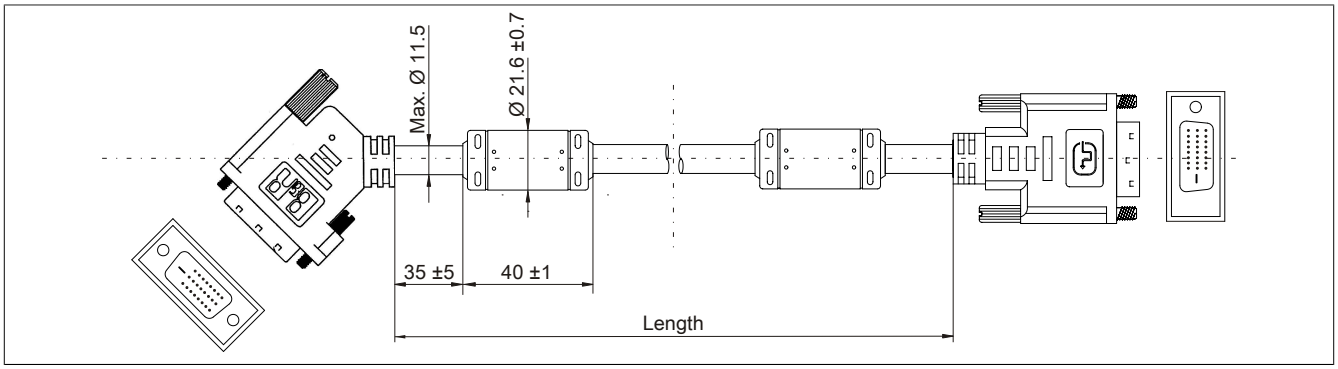

Figure 196: 5CASDL.0xxx-01 - Dimensions

9.3.1.6 Cable pinout

Warning!

Field-assembled cables must be wired according to these specifications.

If a field-assembled cable is used, B&R cannot guarantee that it will function properly. All cables provided by B&R are guaranteed to function properly, however.

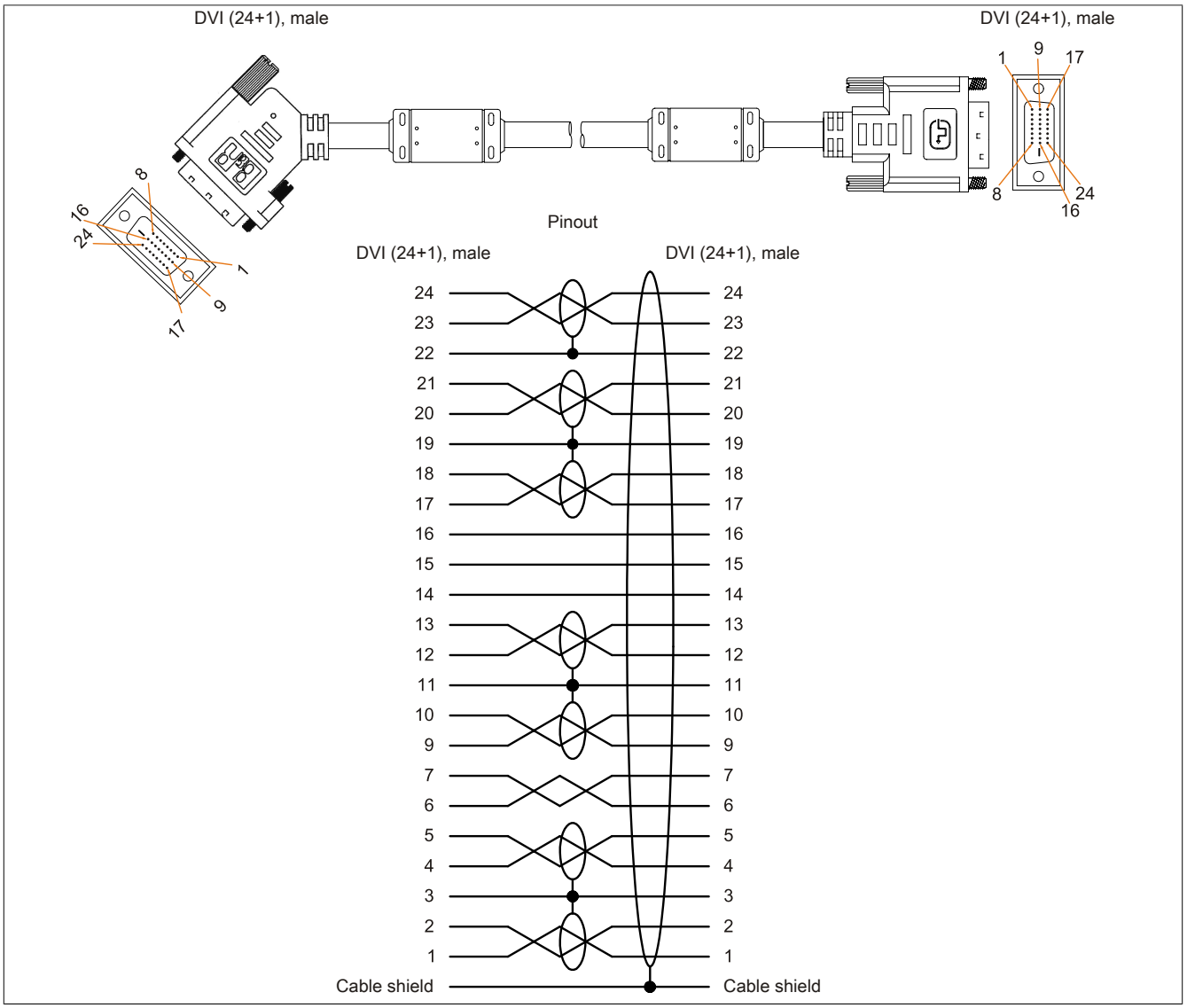

Figure 197: 5CASDL.0xxx-01 - Pinout

9.4 SDL flex cables

9.4.1 5CASDL.0xxx-03

9.4.1.1 General information

5CASDL.0xxx-03 SDL flex cables are designed for use in both inflexible and flexible applications (e.g. swing arm systems).

> **Caution!**
>
> **Power must be disconnected before connecting or disconnecting cables.**

9.4.1.2 Order data

Model number	Short description	Figure
	SDL flex cables	
5CASDL.0018-03	SDL flex cable - 1.8 m	
5CASDL.0050-03	SDL flex cable - 5 m	
5CASDL.0100-03	SDL flex cable - 10 m	
5CASDL.0150-03	SDL flex cable - 15 m	
5CASDL.0200-03	SDL flex cable - 20 m	
5CASDL.0250-03	SDL flex cable - 25 m	
5CASDL.0300-03	SDL flex cable - 30 m	

Table 304: 5CASDL.0018-03, 5CASDL.0050-03, 5CASDL.0100-03, 5CASDL.0150-03, 5CASDL.0200-03, 5CASDL.0250-03, 5CASDL.0300-03 - Order data

9.4.1.3 Technical data

Model number	5CASDL. 0018-03	5CASDL. 0050-03	5CASDL. 0100-03	5CASDL. 0150-03	5CASDL. 0200-03	5CASDL. 0250-03	5CASDL. 0300-03
General information							
Certification							
CE	Yes						
UL	cULus E115267 Industrial Control Equipment						
HazLoc	cULus HazLoc E180196 Industrial Control Equipment for Hazardous Locations Class I, Division 2, Groups ABCD, T4[1]			-			
DNV GL	Environmental Category C, EMC1[2]						
DNV GL	Temperature: **B** (0 - 55°C) Humidity: **B** (up to 100%) Vibration: **A** (0.7g) EMC: **B** (Bridge and open deck)[2]						
GOST-R	Yes						
Cable construction							
Wire cross section	AWG 24 (control wires) AWG 26 (DVI, USB, data)						
Features	Silicone- and halogen-free						
Shield	Individual cable pairs, entire cable						
Complete shielding	Aluminum-clad foil and tinned copper braiding						
Outer sheathing							
Material	Special semi-glossy TMPU						
Color	Black						
Labeling	(B&R) SDL Cable (UL) AWM 20236 80°C 30V E 63216						
Connector							
Type	2x DVI-D (24+1), male						
Connection cycles	Min. 200						
Contacts	Gold-plated						
Mechanical protection	Metal cover with crimped stress relief						
Locating screw tightening torque	Max. 0.5 Nm						
Electrical characteristics							
Operating voltage	≤30 V						
Test voltage							
Wire/Wire	1 kV						
Wire/Shield	0.5 kV						
Wave impedance	100 ±10 Ω						
Conductor resistance							
AWG 24	≤95 Ω/km						
AWG 26	≤145 Ω/km						

Table 305: 5CASDL.0018-03, 5CASDL.0050-03, 5CASDL.0100-03, 5CASDL.0150-03, 5CASDL.0200-03, 5CASDL.0250-03, 5CASDL.0300-03 - Technical data

Model number	5CASDL. 0018-03	5CASDL. 0050-03	5CASDL. 0100-03	5CASDL. 0150-03	5CASDL. 0200-03	5CASDL. 0250-03	5CASDL. 0300-03
Insulation resistance	>200 MΩ/km						
Operating conditions							
Approbation	UL AWM 20236 80°C 30 V						
Flame-retardant	In accordance with UL758 (cable vertical flame test)						
Oil and hydrolysis resistance	In accordance with VDE 0282-10						
Environmental conditions							
Temperature							
Storage	-20 to 80°C						
Fixed installation	-20 to 80°C						
Flexible installation	-5 to 60°C						
Mechanical characteristics							
Dimensions							
Length	1.8 m ±20 mm	5 m ±45 mm	10 m ±90 mm	15 m ±135 mm	20 m ±180 mm	25 m ±225 mm	30 m ±270 mm
Diameter	Max. 12 mm						
Bend radius							
Fixed installation	≥3.5x cable diameter						
Flexible installation	≥15x cable diameter (from ferrite bead - ferrite bead)						
Flexibility	Flexible, valid for ferrite bead - ferrite bead (tested 300,000 cycles with 15x cable diameter, 4800 cycles/hour)						
Drag chain data							
Flex cycles	300,000						
Speed	4800 cycles/hour						
Bend radius	180 mm, 15x cable diameter						
Hub	460 mm						
Weight	Approx. 460 g	Approx. 1020 g	Approx. 1940 g	Approx. 2840 g	Approx. 3740 g	Approx. 4560 g	Approx. 5590 g
Tension							
During operation	≤50 N						
During installation	≤400 N						

Table 305: 5CASDL.0018-03, 5CASDL.0050-03, 5CASDL.0100-03, 5CASDL.0150-03, 5CASDL.0200-03, 5CASDL.0250-03, 5CASDL.0300-03 - Technical data

1) Yes, although applies only if all components installed within the complete system have this certification and the complete system itself carries the corresponding mark.
2) Yes, although applies only if all components installed within the complete system have this certification.

9.4.1.4 Bend radius specifications

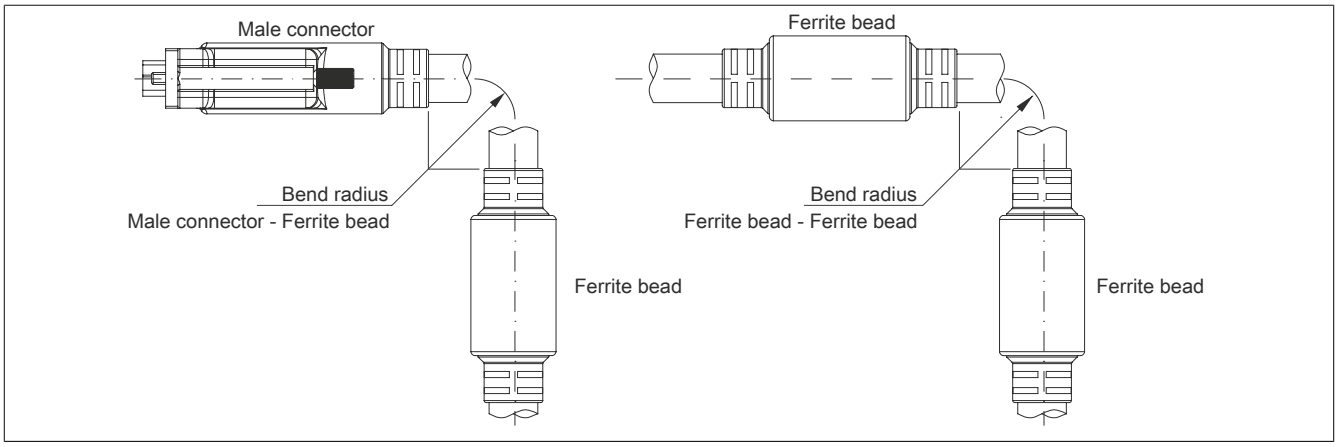

Figure 198: Bend radius specifications

9.4.1.5 Dimensions

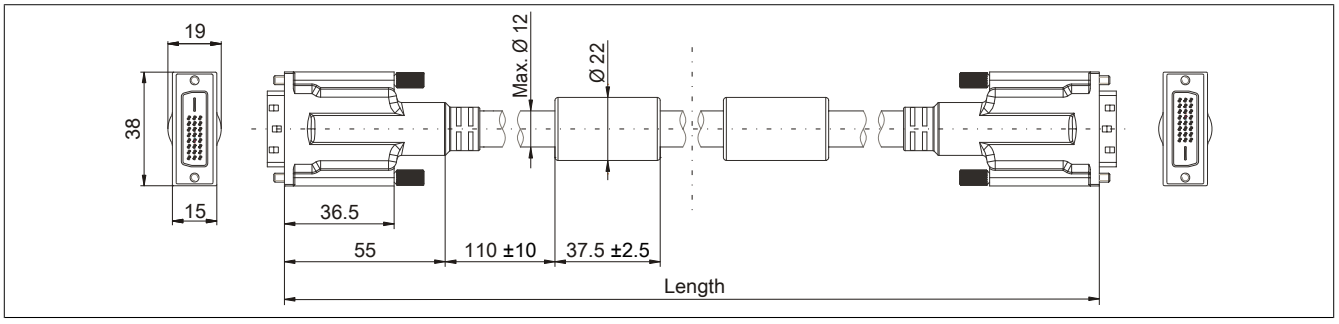

Figure 199: 5CASDL.0xxx-03 - Dimensions

9.4.1.6 Design

Element	Assignment	Cross section
DVI	TMDS data 0	26 AWG
	TMDS data 1	26 AWG
	TMDS data 2	26 AWG
	TMDS cycle	26 AWG
USB	XUSB0	26 AWG
	XUSB1	26 AWG
Data	SDL	26 AWG
Control wires	DDC cycle	24 AWG
	DDC data	24 AWG
	+5 V	24 AWG
	Ground	24 AWG
	Hot plug detect	24 AWG

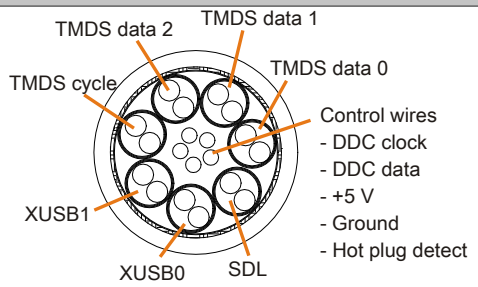

Table 306: 5CASDL.0xxx-03 SDL flex cables - Structure

9.4.1.7 Cable pinout

Warning!

Field-assembled cables must be wired according to these specifications.

If a field-assembled cable is used, B&R cannot guarantee that it will function properly. All cables provided by B&R are guaranteed to function properly, however.

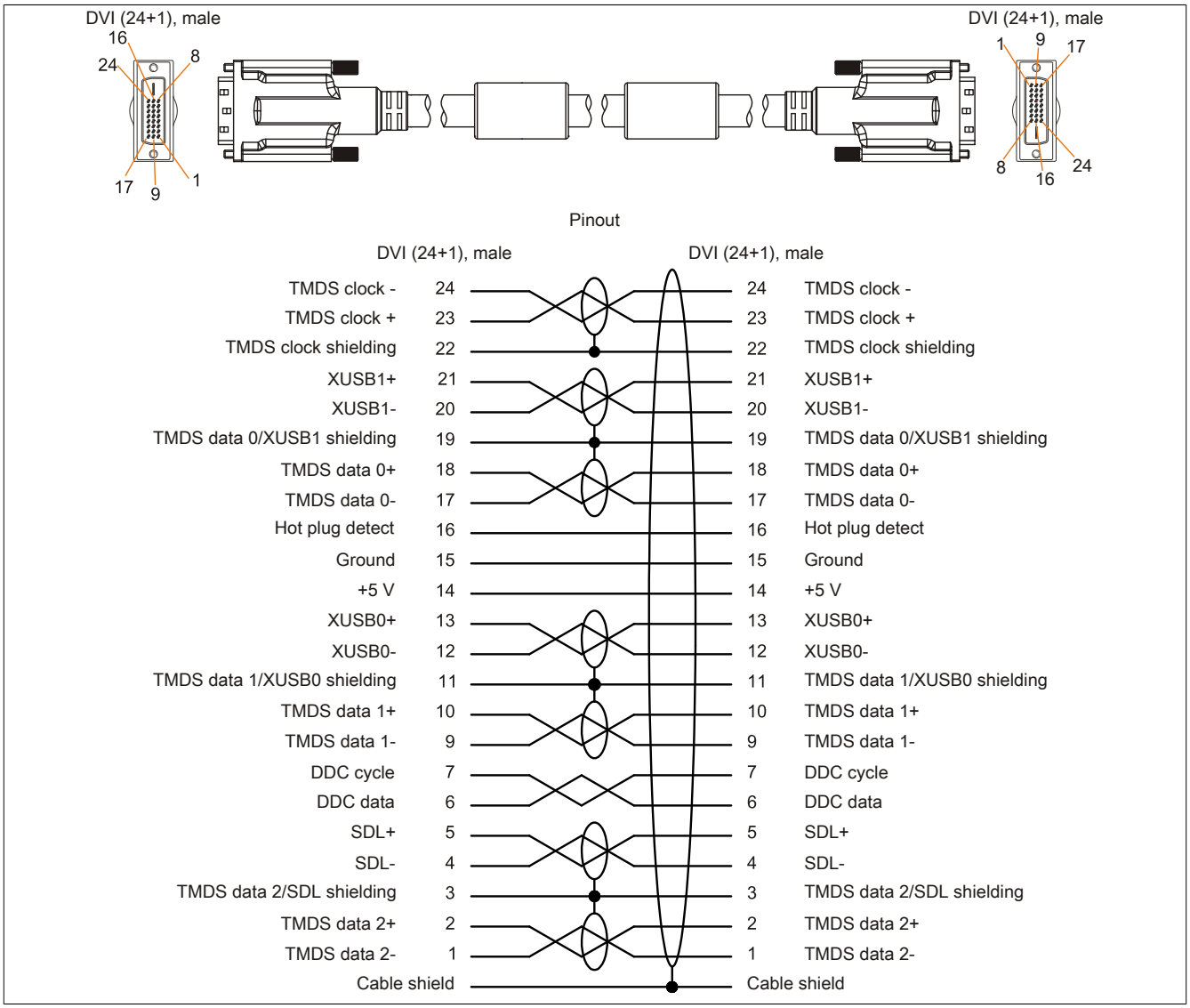

Figure 200: 5CASDL.0xxx-03 - Pinout

9.5 SDL flex cables with extender

9.5.1 5CASDL.0xx0-13

9.5.1.1 General information

5CASDL.0xx0-13 SDL flex cables with an extender are designed for use in both inflexible and flexible applications (e.g. swing arm systems).

> **Caution!**
>
> **Power must be disconnected before connecting or disconnecting cables.**

9.5.1.2 Order data

Model number	Short description	Figure
	SDL flex cables	
5CASDL.0300-13	SDL flex cable with extender - 30 m	
5CASDL.0400-13	SDL flex cable with extender - 40 m	
5CASDL.0430-13	SDL flex cable with extender - 43 m	

Table 307: 5CASDL.0300-13, 5CASDL.0400-13, 5CASDL.0430-13 - Order data

9.5.1.3 Technical data

Model number	5CASDL.0300-13	5CASDL.0400-13	5CASDL.0430-13
General information			
Certification			
CE	Yes		
UL	cULus E115267 Industrial Control Equipment		
DNV GL	Environmental Category C, EMC1[1)]		
DNV GL	Temperature: **B** (0 - 55°C) Humidity: **B** (up to 100%) Vibration: **A** (0.7g) EMC: **B** (Bridge and open deck)[1)]		
GOST-R	Yes		
Cable construction			
Wire cross section	AWG 24 (control wires) AWG 26 (DVI, USB, data)		
Features	Silicone- and halogen-free		
Shield	Individual cable pairs, entire cable		
Complete shielding	Aluminum-clad foil and tinned copper braiding		
Outer sheathing			
Material	Special semi-glossy TMPU		
Color	Black		
Labeling	(B&R) SDL cable (UL) AWM 20236 80°C 30V E63216		
Connector			
Type	2x DVI-D (24+1), male		
Connection cycles	Min. 200		
Contacts	Gold-plated		
Mechanical protection	Metal cover with crimped stress relief		
Locating screw tightening torque	Max. 0.5 Nm		
Electrical characteristics			
Operating voltage	≤30 V		
Test voltage			
Wire/Wire	1 kV		
Wire/Shield	0.5 kV		
Wave impedance	100 ±10 Ω		
Conductor resistance			
AWG 24	≤95 Ω/km		
AWG 26	≤145 Ω/km		
Insulation resistance	>200 MΩ/km		
Operating conditions			
Approbation	UL AWM 20236 80°C 30 V		
Flame-retardant	In accordance with UL758 (cable vertical flame test)		
Oil and hydrolysis resistance	In accordance with VDE 0282-10		
Environmental conditions			
Temperature			
Storage	-20 to 60°C		
Fixed installation	-20 to 60°C		
Flexible installation	-5 to 60°C		

Table 308: 5CASDL.0300-13, 5CASDL.0400-13, 5CASDL.0430-13 - Technical data

Model number	5CASDL.0300-13	5CASDL.0400-13	5CASDL.0430-13
Mechanical characteristics			
Dimensions			
Length	30 m ±280 mm	40 m ±380 mm	43 m ±410 mm
Diameter	Max. 12 mm		
Extender box			
Width	35 mm		
Length	125 mm		
Height	18.5 mm		
Bend radius			
Fixed installation	≥6x cable diameter (from male connector - ferrite bead) ≥10x cable diameter (from ferrite bead - ferrite bead)		
Flexible installation	≥15x cable diameter (from ferrite bead - ferrite bead)		
Flexibility	Flexible, valid for ferrite bead - ferrite bead (tested 300,000 cycles with 15x cable diameter, 4800 cycles/hour)		
Drag chain data			
Flex cycles	300,000		
Speed	4800 cycles/hour		
Bend radius	180 mm, 15x cable diameter		
Hub	460 mm		
Weight	Approx. 5430 g	Approx. 7200 g	Approx. 7790 g
Tension			
During operation	≤50 N		
During installation	≤400 N		

Table 308: 5CASDL.0300-13, 5CASDL.0400-13, 5CASDL.0430-13 - Technical data

1) Yes, although applies only if all components installed within the complete system have this certification.

9.5.1.4 Bend radius specifications

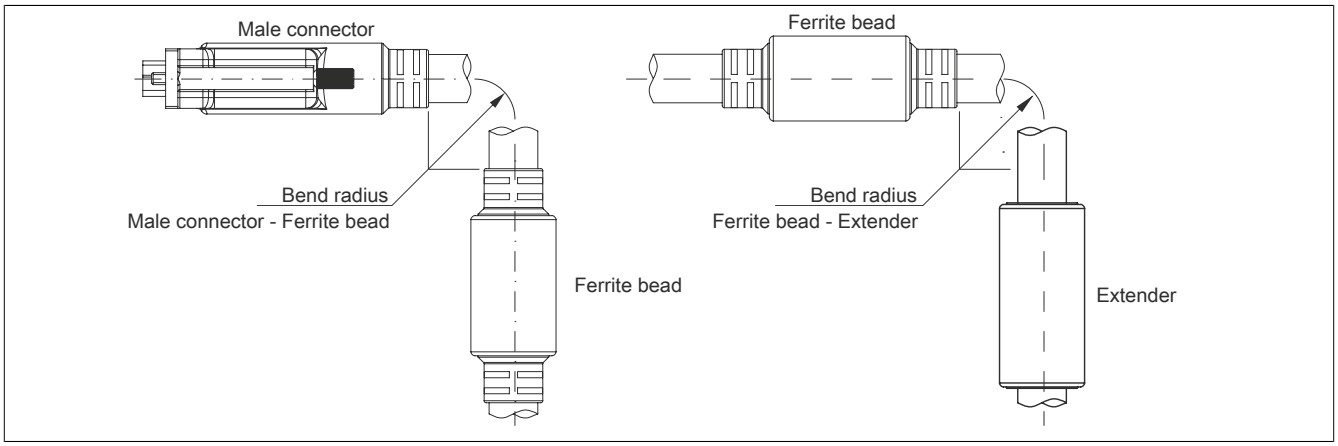

Figure 201: Bend radius specification with extender

9.5.1.5 Dimensions

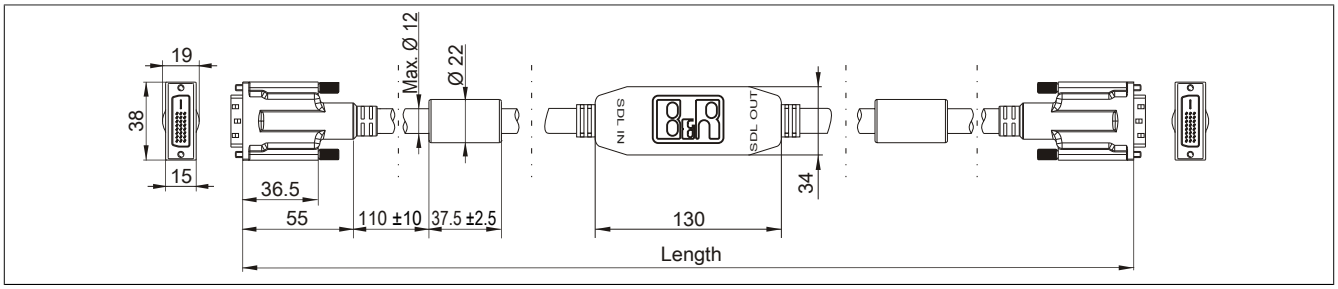

Figure 202: 5CASDL.0xx0-13 - Dimensions

9.5.1.6 Cable pinout

Warning!

Field-assembled cables must be wired according to these specifications.

If a field-assembled cable is used, B&R cannot guarantee that it will function properly. All cables provided by B&R are guaranteed to function properly, however.

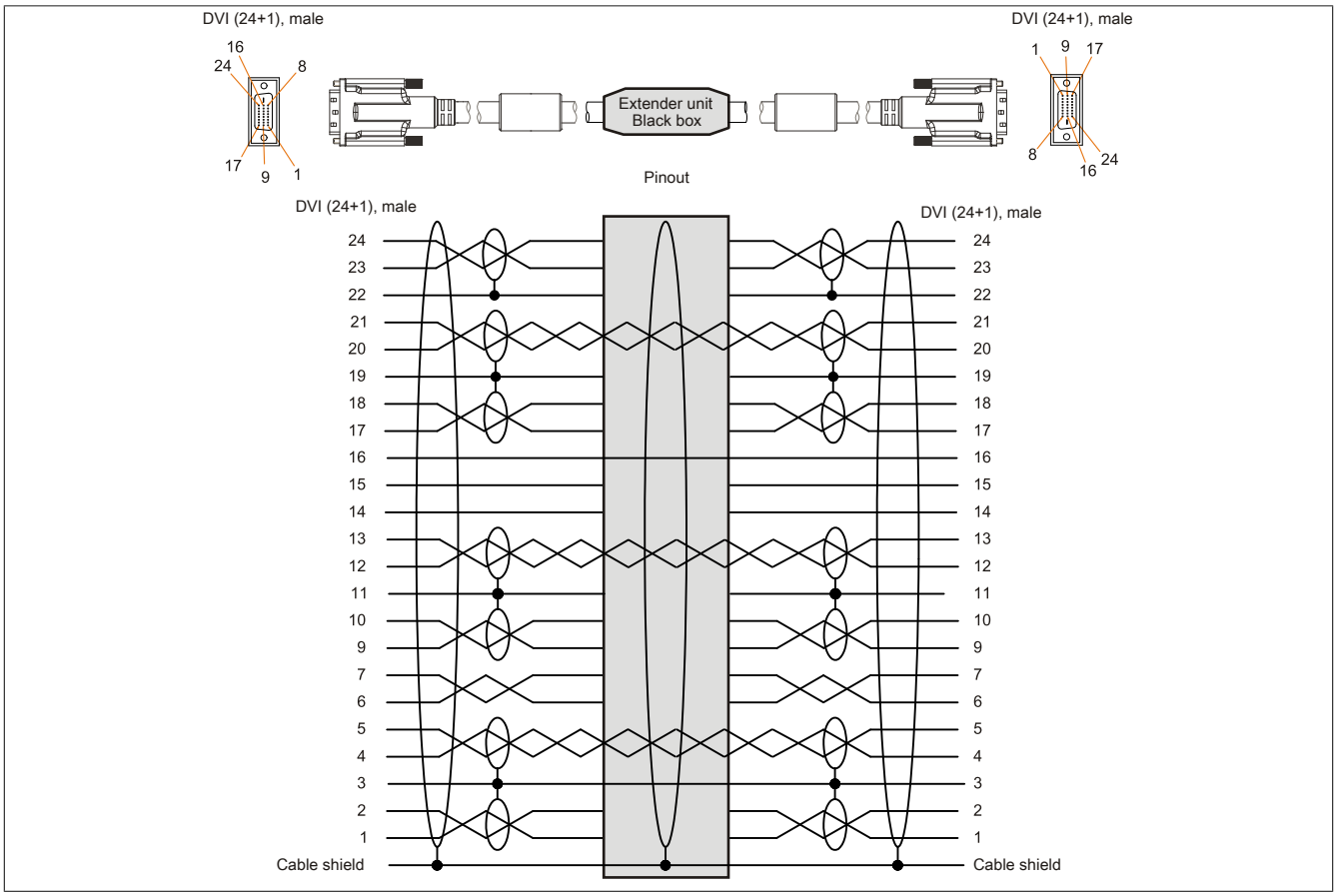

Figure 203: 5CASDL.0xx0-13 - Pinout

9.5.1.7 Cable connection

SDL flex cables with an extender must be connected between the B&R Industrial PC and the Automation Panel display unit in the correct direction. The proper signal direction is indicated on the extender.

- Connect the end labeled "SDL IN" with the video output of the APC910 (monitor/panel output) or Panel OUT of an AP900 AP Link card.
- Connect the "SDL OUT" end to the display unit (e.g. Automation Panel 900) via the Automation Panel Link plug-in card (Panel IN).

- Connect the end labeled "SDL IN" with the video output of the APC910 (monitor/panel output).
- Connect the "SDL OUT" end to the display unit (e.g. Automation Panel 830).

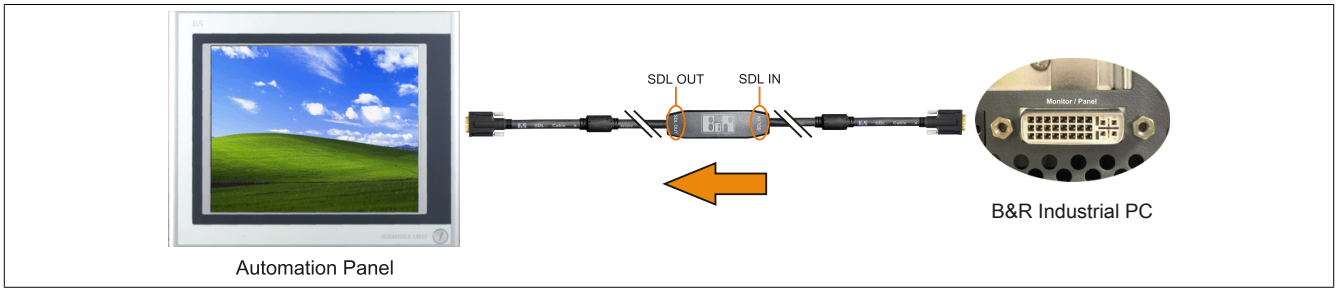

Figure 204: Example of the signal direction for an SDL flex cable with extender

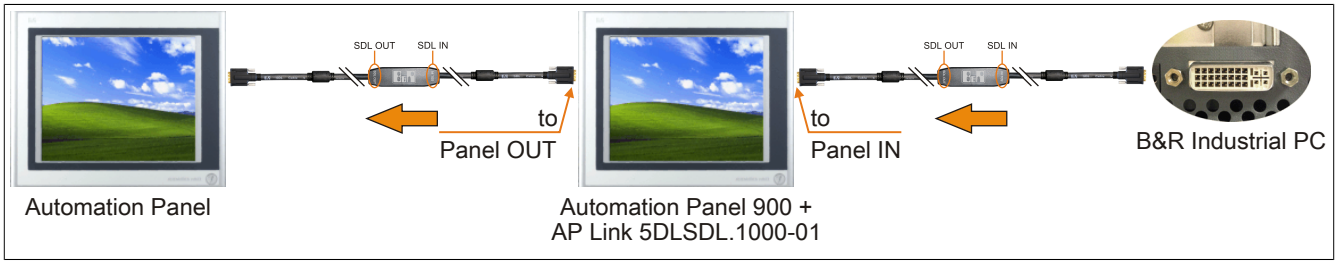

Figure 205: Example of the signal direction for an SDL flex cable with extender

9.6 SDL3 cables

9.6.1 5CASD3.xxxx-00

9.6.1.1 General information

5CASD3.xxxx-00 SDL3 cables are designed to transfer SDL3 data and very easy to install. An RJ45 connector allows these cables to be connected in very narrow spaces, for example in swing arm shafts.

> **Caution!**
>
> **Power must be disconnected before connecting or disconnecting cables.**

9.6.1.2 Order data

Model number	Short description	Figure
	SDL3 cables	
5CASD3.0030-00	SDL3 cable - 3 m	
5CASD3.0050-00	SDL3 cable - 5 m	
5CASD3.0100-00	SDL3 cable - 10 m	
5CASD3.0150-00	SDL3 cable - 15 m	
5CASD3.0200-00	SDL3 cable - 20 m	
5CASD3.0300-00	SDL3 cable - 30 m	
5CASD3.0500-00	SDL3 cable - 50 m	
5CASD3.1000-00	SDL3 cable - 100 m	

Table 309: 5CASD3.0030-00, 5CASD3.0050-00, 5CASD3.0100-00, 5CASD3.0150-00, 5CASD3.0200-00, 5CASD3.0300-00, 5CASD3.0500-00, 5CASD3.1000-00 - Order data

9.6.1.3 Technical data

Model number	5CASD3. 0030-00	5CASD3. 0050-00	5CASD3. 0100-00	5CASD3. 0150-00	5CASD3. 0200-00	5CASD3. 0300-00	5CASD3. 0500-00	5CASD3. 1000-00
General information								
Certification								
CE	Yes							
UL	cULus E115267 Industrial Control Equipment							
HazLoc	cULus HazLoc E180196 Industrial Control Equipment for Hazardous Locations Class I, Division 2, Groups ABCD, T4[1)]							
Cable construction								
Wire cross section	4x 2x 26/7 AWG					4x 2x 23/1 AWG		
Features	Flame-resistant, halogen-free, lead-free							
Outer sheathing								
Material	Polyurethane (PUR)							
Color	Yellow, RAL 1021							
Labeling	HARTING INDUSTRIAL CABLE S/FTP CAT 6A PUR 4x 2x 26/7 AWG					HARTING INDUSTRIAL INSTALLATION CABLE S/FTP CAT 7 PUR 4x 2x 23/1 AWG		
Lines								
Wire insulation	Polyethylene (PE)							
Wire colors	Green/White-green, orange/white-orange, blue/white-blue, brown/white-brown							
Shield	Aluminum foil and braided wire shield made of tinned copper wires							
Type	Unprotected copper wire, 4x 2x 26/7 AWG					Unprotected copper wire, 4x 2x 23/1 AWG		
Connector								
Type	2x RJ45, male							
Connection cycles	Min. 750							
Contacts	8							
Electrical characteristics [2)]								
Operating voltage	≤100 V					≤125 V		
Conductor resistance	≤290 Ω/km					≤75 Ω/km		
Wave impedance	100 ±5 Ω (at 100 MHz)							
Transfer properties	Category 6A / Class EA up to 500 MHz in accordance with ISO/IEC 11801 (EN 50173-1), ISO/IEC 24702 (EN 50173-3)					Category 7 / Class F up to 600 MHz in accordance with ISO/IEC 11801 (EN 50173-1), ISO/IEC 24702 (EN 50173-3)		
Insulation resistance	≥500 MΩ/km					≥5 GΩ/km		
Operating conditions								
Flame-retardant	IEC 60332-1-2							
Oil and hydrolysis resistance	EN 60811-2-1 (90°C / 7x24 h)							

Table 310: 5CASD3.0030-00, 5CASD3.0050-00, 5CASD3.0100-00, 5CASD3.0150-00, 5CASD3.0200-00, 5CASD3.0300-00, 5CASD3.0500-00, 5CASD3.1000-00 - Technical data

Model number	5CASD3. 0030-00	5CASD3. 0050-00	5CASD3. 0100-00	5CASD3. 0150-00	5CASD3. 0200-00	5CASD3. 0300-00	5CASD3. 0500-00	5CASD3. 1000-00
EN 60529 protection								
Cables	IP20							
RJ45 connector	IP20, only when connected properly							
Environmental conditions								
Temperature								
Storage	-40 to 70°C							
Fixed installation	-40 to 70°C							
Flexible installation	-40 to 70°C					-10 to 50°C		
Mechanical characteristics								
Dimensions								
Length	3 m	5 m	10 m	15 m	20 m	30 m	50 m	100 m
Diameter	6.7 mm					8.3 mm		
Bend radius								
Fixed installation	≥5x diameter					≥4x diameter		
Flexible installation	≥10x diameter					≥8x diameter		
Weight	250 g		500 g	700 g	950 g	2150 g	3500 g	6950 g
Tension								
During operation	≤70 N					≤110 N		
During installation	≤70 N					≤110 N		

Table 310: 5CASD3.0030-00, 5CASD3.0050-00, 5CASD3.0100-00, 5CASD3.0150-00, 5CASD3.0200-00, 5CASD3.0300-00, 5CASD3.0500-00, 5CASD3.1000-00 - Technical data

1) Yes, although applies only if all components installed within the complete system have this certification and the complete system itself carries the corresponding mark.
2) At an ambient temperature of 20°C.

9.6.1.4 Bend radius specifications

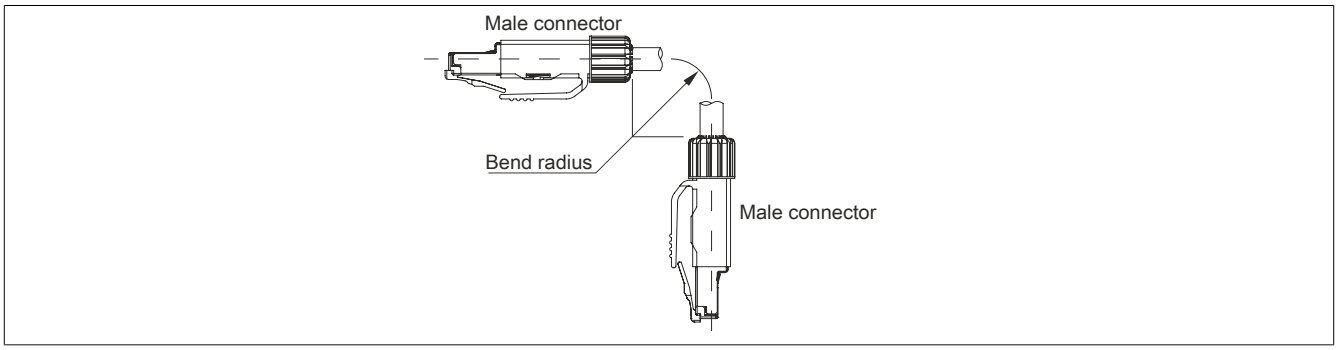

Figure 206: SDL3 - Bend radius specifications

9.6.1.5 Dimensions

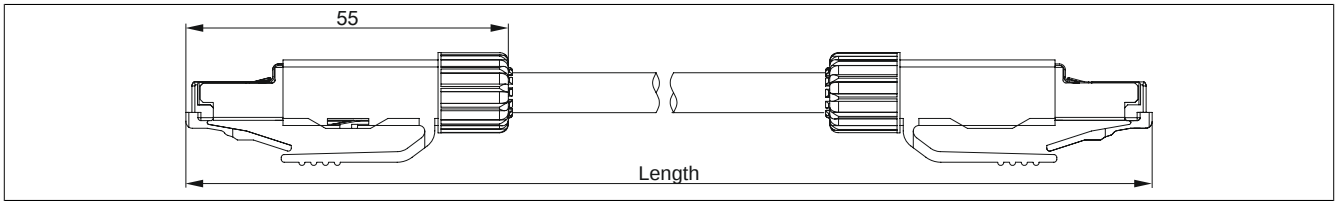

Figure 207: 5CASD3.xxxx-00 - Dimensions

9.6.1.6 Cable pinout

Warning!

Field-assembled cables must be wired according to these specifications.

If a field-assembled cable is used, B&R cannot guarantee that it will function properly. All cables provided by B&R are guaranteed to function properly, however.

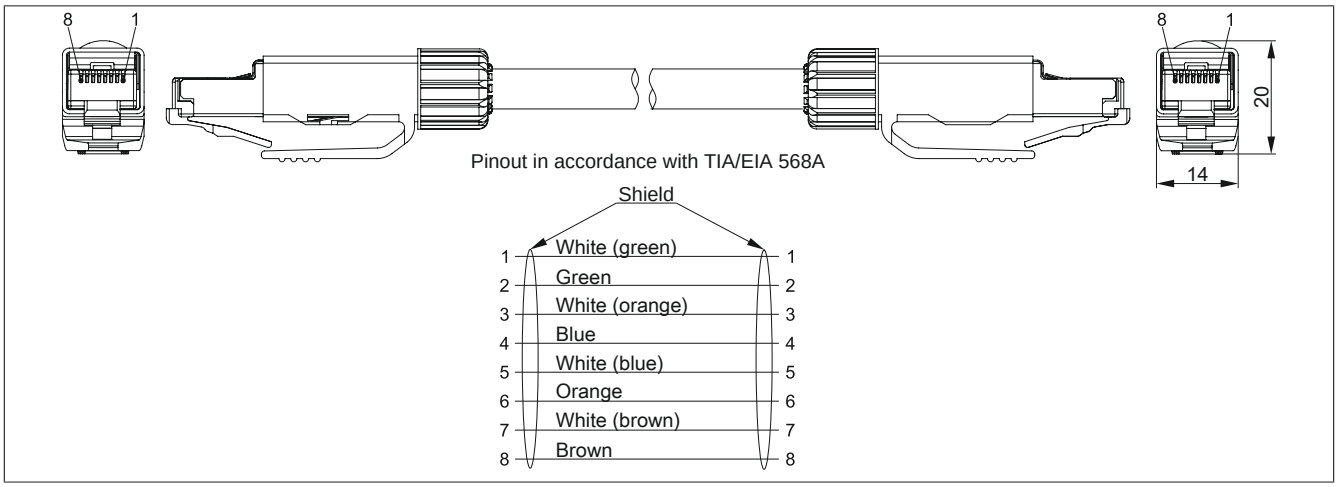

Figure 208: 5CASD3.xxxx-00 - Pinout

9.6.1.7 Cabling

The following information and figure apply when using a field-assembled cable that is not directly connected to a B&R device, but to an RJ45 network interface (e.g. patch panel).

Cables must meet category 6a (Cat6a) or category 7 (Cat7) requirements. Exceeding the maximum total length of 100 m is not permitted.

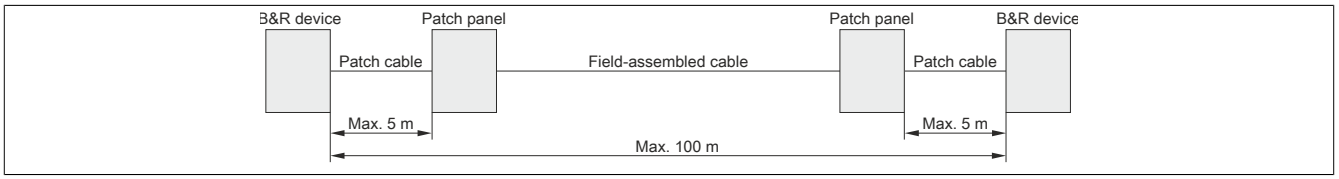

Figure 209: Cabling with a field-assembled cable

9.7 USB cables

9.7.1 5CAUSB.00xx-00

9.7.1.1 General information

USB cables are designed to achieve USB 2.0 transfer speeds.

9.7.1.2 Order data

Model number	Short description	Figure
	USB cables	
5CAUSB.0018-00	USB 2.0 connection cable - Type A - Type B connector - 1.8 m	
5CAUSB.0050-00	USB 2.0 connection cable - Type A - Type B connector - 5 m	

Table 311: 5CAUSB.0018-00, 5CAUSB.0050-00 - Order data

9.7.1.3 Technical data

Model number	5CAUSB.0018-00	5CAUSB.0050-00
General information		
Certification		
CE	Yes	
UL	cULus E115267 Industrial Control Equipment	
DNV GL	Environmental Category C, EMC1[1)]	
DNV GL	Temperature: **B** (0 - 55°C) Humidity: **B** (up to 100%) Vibration: **A** (0.7g) EMC: **B** (Bridge and open deck)[1)]	
GOST-R	Yes	
Cable construction		
Wire cross section	AWG 24, 28	
Shield	Entire cable	
Outer sheathing		
Color	Beige	
Connector		
Type	USB type A male and USB type B male	
Mechanical characteristics		
Dimensions		
Length	1.8 m ±30 mm	5 m ±50 mm
Diameter	Max. 5 mm	
Bend radius	Min. 100 mm	

Table 312: 5CAUSB.0018-00, 5CAUSB.0050-00 - Technical data

1) Yes, although applies only if all components installed within the complete system have this certification.

9.7.1.4 Cable pinout

Warning!

Field-assembled cables must be wired according to these specifications.

If a field-assembled cable is used, B&R cannot guarantee that it will function properly. All cables provided by B&R are guaranteed to function properly, however.

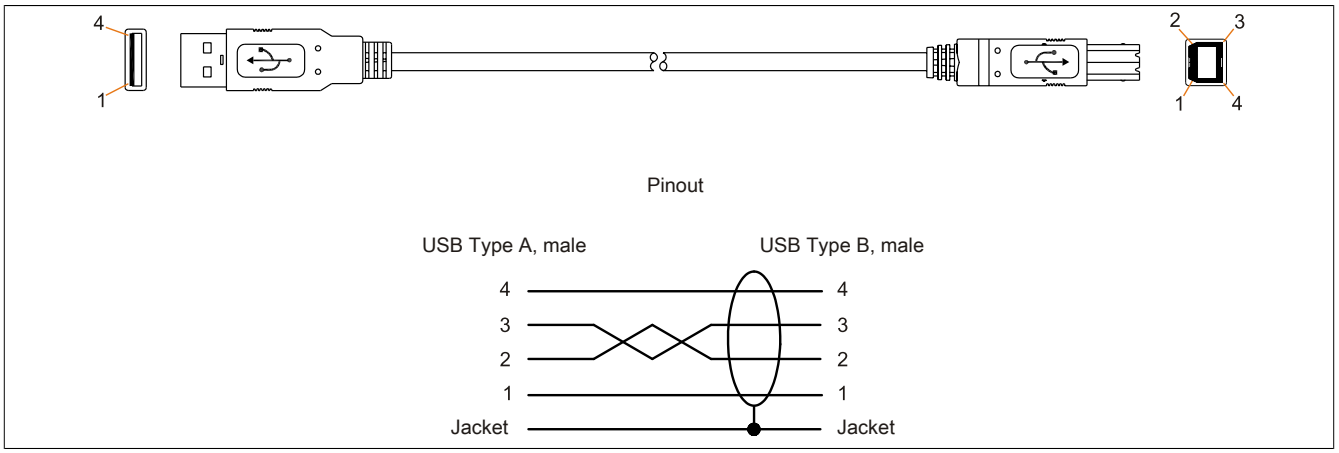

Figure 210: 5CAUSB.00xx-00 USB cables - Pinout

9.8 RS232 cables

9.8.1 9A0014.xx

9.8.1.1 General information

RS232 cables are used as extension cables between two RS232 interfaces.

9.8.1.2 Order data

Model number	Short description	Figure
	RS232 cables	
9A0014.02	RS232 extension cable for remote operation of display unit with touch screen, 1.8 m	
9A0014.05	RS232 extension cable for remote operation of display unit with touch screen, 5 m	
9A0014.10	RS232 extension cable for remote operation of display unit with touch screen, 10 m	

Table 313: 9A0014.02, 9A0014.05, 9A0014.10 - Order data

9.8.1.3 Technical data

Model number	9A0014.02	9A0014.05	9A0014.10
General information			
Certification			
CE		Yes	
GOST-R	-	Yes	
Cable construction			
Wire cross section		AWG 26	
Shield		Entire cable	
Outer sheathing			
Color		Beige	
Connector			
Type		9-pin male/female DSUB connector	
Locating screw tightening torque		Max. 0.5 Nm	
Mechanical characteristics			
Dimensions			
Length	1.8 m ±50 mm	5 m ±80 mm	10 m ±100 mm
Diameter		Max. 5 mm	
Bend radius		Min. 70 mm	

Table 314: 9A0014.02, 9A0014.05, 9A0014.10 - Technical data

9.8.1.4 Cable pinout

Warning!

Field-assembled cables must be wired according to these specifications.

If a field-assembled cable is used, B&R cannot guarantee that it will function properly. All cables provided by B&R are guaranteed to function properly, however.

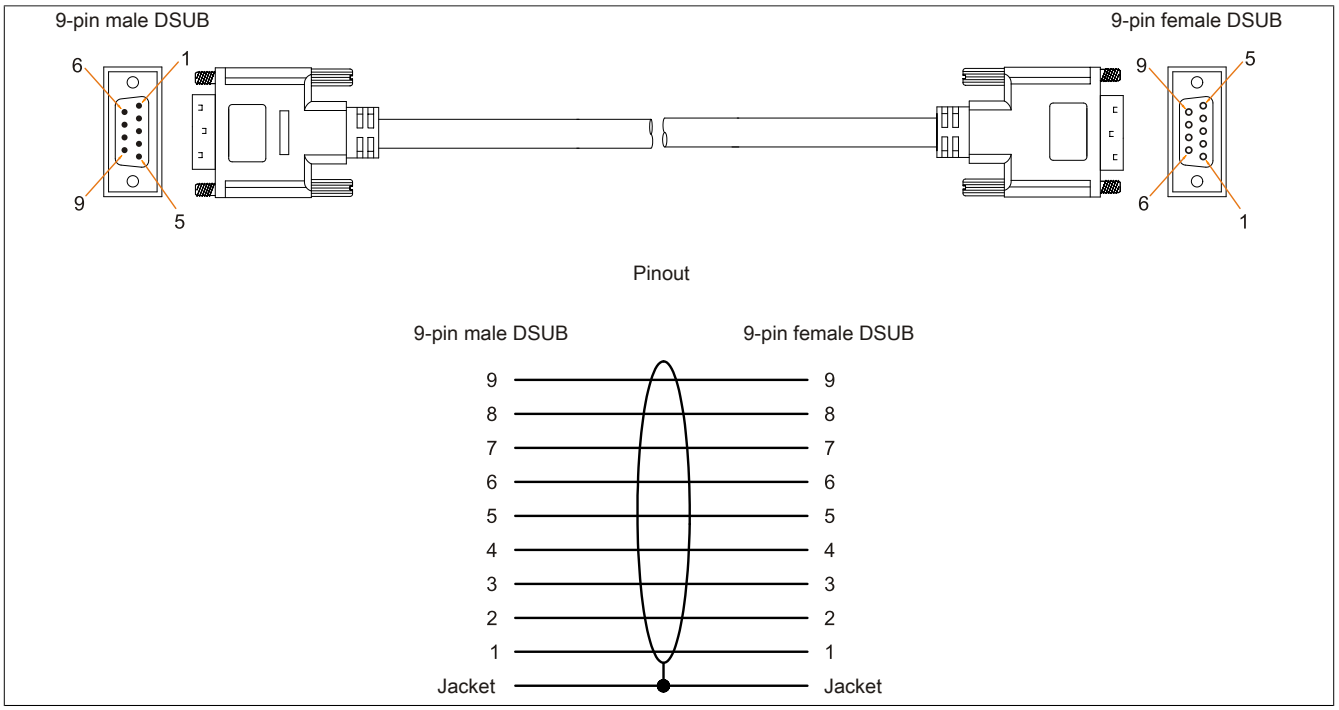

Figure 211: 9A0014.xx RS232 cables - Pinout

9.9 Internal supply cable

9.9.1 5CAMSC.0001-00

9.9.1.1 General information

This supply cable is used internally, for example to provide power to special PCI cards. It is connected to the mainboard.

For requirements and procedures, see "Connecting an external device to the mainboard" on page .

For requirements and procedures, see "Connecting an external device to the mainboard" on page .

> **Caution!**
>
> **Power must be disconnected before connecting or disconnecting cables.**

9.9.1.2 Order data

Model number	Short description	Figure
	Accessories	
5CAMSC.0001-00	Internal supply cable	

Table 315: 5CAMSC.0001-00 - Order data

9.9.1.3 Technical data

Model number	5CAMSC.0001-00
General information	
Certification	
CE	Yes
GOST-R	Yes
Cable construction	
Wire cross section	AWG 22
Connector	
Type	1x 4-pin male disk drive power connector, 1x 4-pin female connector housing
Mechanical characteristics	
Dimensions	
Length	100 mm ±5 mm
Flexibility	Flexible

Table 316: 5CAMSC.0001-00 - Technical data

10 Replacement fan

10.1 5AC901.FI0x-00

10.1.1 General information

Information:

Fan filters are subject to wear and should be checked with appropriate frequency to determine whether the air flow provides sufficient cooling. Replacing or cleaning the fan filter is appropriate at that time.

10.1.2 Order data

Model number	Short description	Figure
	Accessories	
5AC901.FI01-00	APC910 air filter - For 1-slot APC910 - 1 pieces	
5AC901.FI02-00	APC910 air filter - For 2-slot APC910 - 1 pieces	
5AC901.FI05-00	APC910 air filter - For 5-slot APC910 - 1 pieces	

Table 317: 5AC901.FI01-00, 5AC901.FI02-00, 5AC901.FI05-00 - Order data

11 Line filter

11.1 5AC804.MFLT-00

11.1.1 General information

The 5AC804.MFLT-00 line filter may be necessary to satisfy requirements regarding conducted disturbances in supply lines in accordance with the 2003 edition of GL EMC1 (Germanischer Lloyd).

The line filter should be installed as close to the end device as possible; the supply line from the end device to the line filter should be kept as short as possible.

11.1.2 Order data

Model number	Short description	Figure
	Accessories	
5AC804.MFLT-00	Line filter	

Table 318: 5AC804.MFLT-00 - Order data

11.1.3 Technical data

Information:

The following characteristics, features and limit values only apply to this accessory and can deviate from those specified for the complete system. The data specifications for the complete system take precedence over those of individual components.

Model number	5AC804.MFLT-00
General information	
Certification	
CE	Yes
UL	cULus E115267 Industrial Control Equipment
HazLoc	cULus HazLoc E180196 Industrial Control Equipment for Hazardous Locations Class I, Division 2, Groups ABCD, T4[1)]
DNV GL	Environmental Category C, EMC1[2)]
DNV GL	Temperature: **B** (0 - 55°C) Humidity: **B** (up to 100%) Vibration: **A** (0.7g) EMC: **B** (Bridge and open deck)[2)]
GOST-R	Yes
Terminal block	
Connection cross section	
With wire end sleeves	1.5 mm²
Flexible	0.2 to 1.5 mm²
Inflexible	0.2 to 2.5 mm²
Electrical characteristics	
Nominal voltage	24 VDC -25% / +30%, SELV [3)]
Nominal current	8 A
Overvoltage category in accordance with EN 61131-2	II
Environmental conditions	
Temperature	
Operation	-25 to 65°C
Storage	-25 to 65°C
Transport	-25 to 65°C
Mechanical characteristics	
Housing	
Material	Galvanized steel plate

Table 319: 5AC804.MFLT-00 - Technical data

Model number	5AC804.MFLT-00
Dimensions	
Width	54 mm
Length	94 mm
Depth	32.15 mm
Weight	205 g

Table 319: 5AC804.MFLT-00 - Technical data

1) Yes, although applies only if all components installed within the complete system have this certification and the complete system itself carries the corresponding mark.
2) Yes, although applies only if all components installed within the complete system have this certification.
3) EN 60950 requirements must be observed, see section "+24 VDC power supply" in the user's manual.

11.1.4 Dimensions

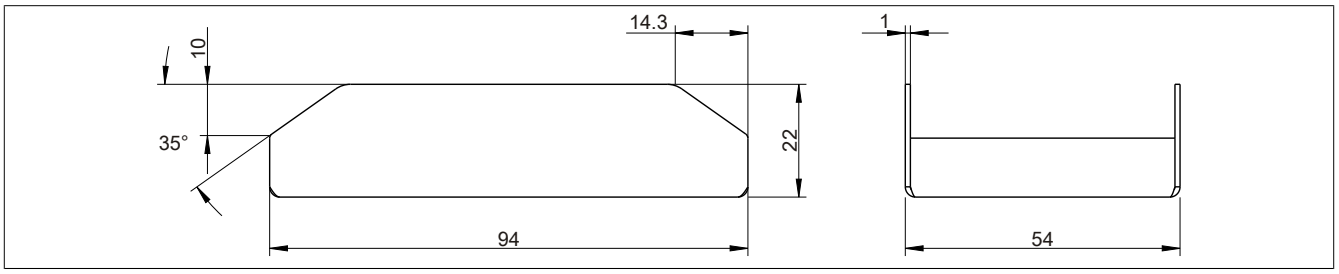

Figure 212: 5AC804.MFLT-00 - Dimensions

11.1.5 Drilling template

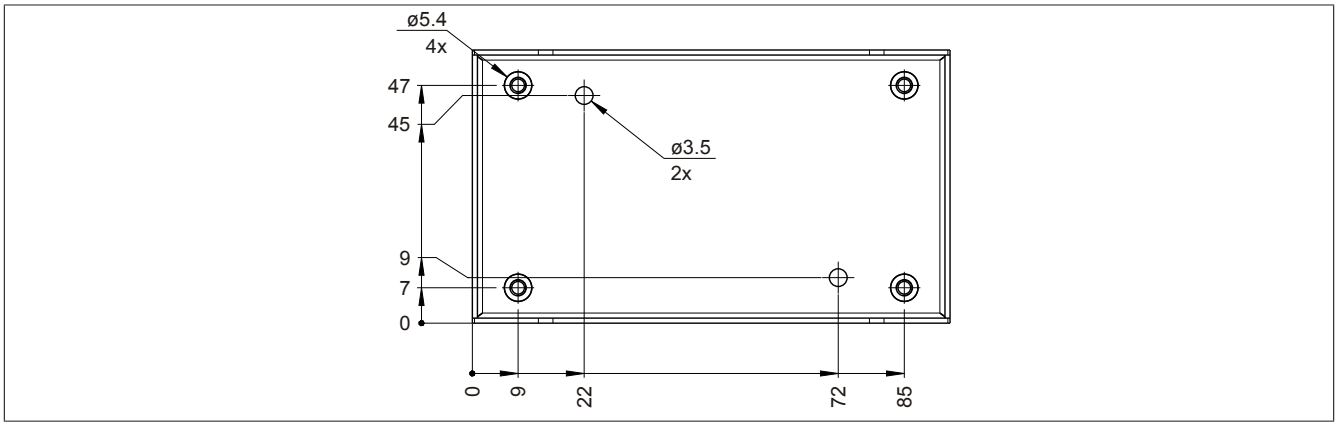

Figure 213: 5AC804.MFLT-00 - Drilling template

11.1.6 Connecting to the end device

The line filter must be connected between the voltage supply and the end device.

The following points must be observed:

- Use shielded, twisted wires.
- Keep the lines as short as possible (voltage supply - line filter - end device).
- The line filter must be installed on an uncoated, oil-free metallic surface.

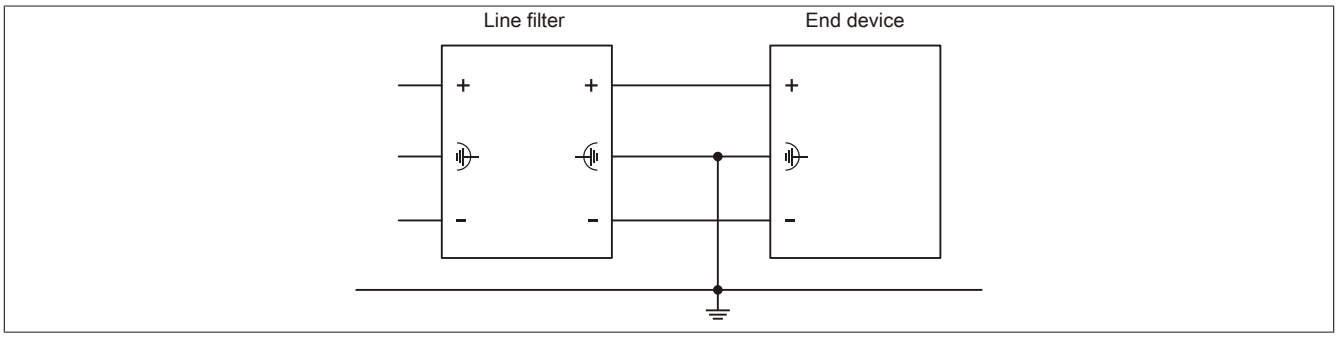

Figure 214: Connection example

Chapter 7 • Maintenance and servicing

This chapter describes servicing / maintenance work that can be carried out by a qualified end user.

1 Replacing the battery

The lithium battery buffers the internal real-time clock (RTC) and CMOS data.

Information:

- **The product design allows the battery to be changed with the B&R device switched either on or off. In some countries, safety regulations do not allow batteries to be changed while the module is switched on.**
- **Any BIOS settings that have been made will remain when the battery is changed with the power turned off (stored in nonvolatile EEPROM). The date and time must be reset later since this data is lost when the battery is changed.**
- **The battery should only be replaced by qualified personnel.**

Warning!

The battery is only permitted to be replaced by a Renata CR2477N battery. The use of another battery may present a risk of fire or explosion.

The battery may explode if handled improperly. Do not recharge, disassemble or dispose of in fire.

The following replacement lithium batteries are available: 4A0006.00-000 (1 pc.) and 0AC201.91 (4 pcs.).

1.1 Evaluating the battery status

The status of the battery is determined immediately after the device is started and subsequently checked by the system every 24 hours. During this measurement, the battery is subjected to a brief load (approximately 1 second) and then evaluated. Once determined, the battery status is displayed in BIOS (Advanced - OEM features - System board features - Voltage values) and in the B&R Control Center (ADI driver); it can also be read in a customer application using the ADI library.

Battery status	Function
N/A	The hardware or firmware being used is too old and does not support reading the battery status.
GOOD	Data buffering is intact.
BAD	From the point when battery capacity is recognized as insufficient (BAD), data buffering is intact for approximately another 500 hours.

Table 320: Battery status

From the point when battery capacity is recognized as insufficient, data buffering is intact for approximately another 500 hours. When replacing the battery, data is buffered for approximately 10 minutes by a gold leaf capacitor.

1.2 Procedure

- Disconnect the power supply to the B&R Industrial PC.
- Touch the housing or ground connection in order to discharge any electrostatic charge from your body.
- Remove the cover from the battery compartment and carefully pull out the battery using the removal strip.
- The battery should not be held by its edges. Insulated tweezers may also be used to insert the battery.

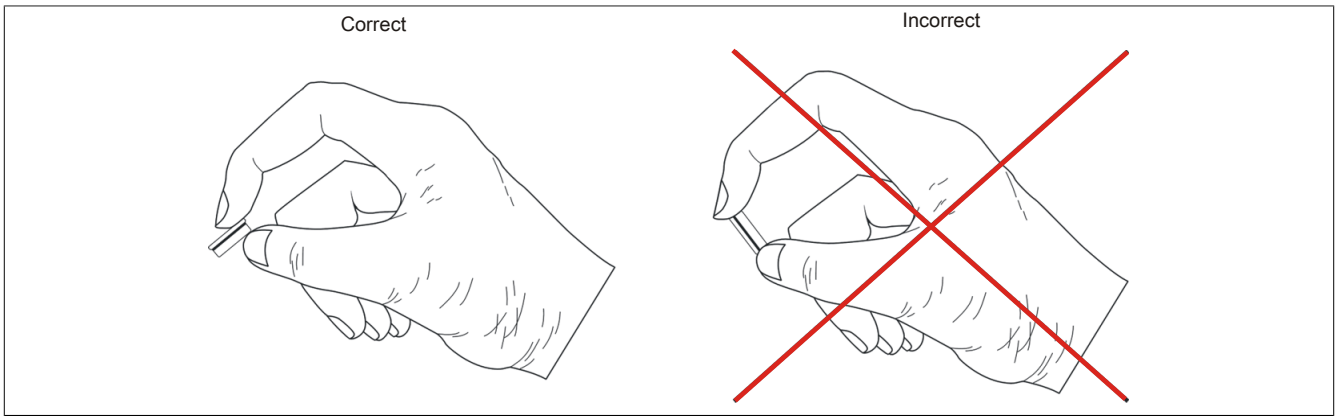

Figure 215: Battery handling

- Insert the new battery with the correct polarity.

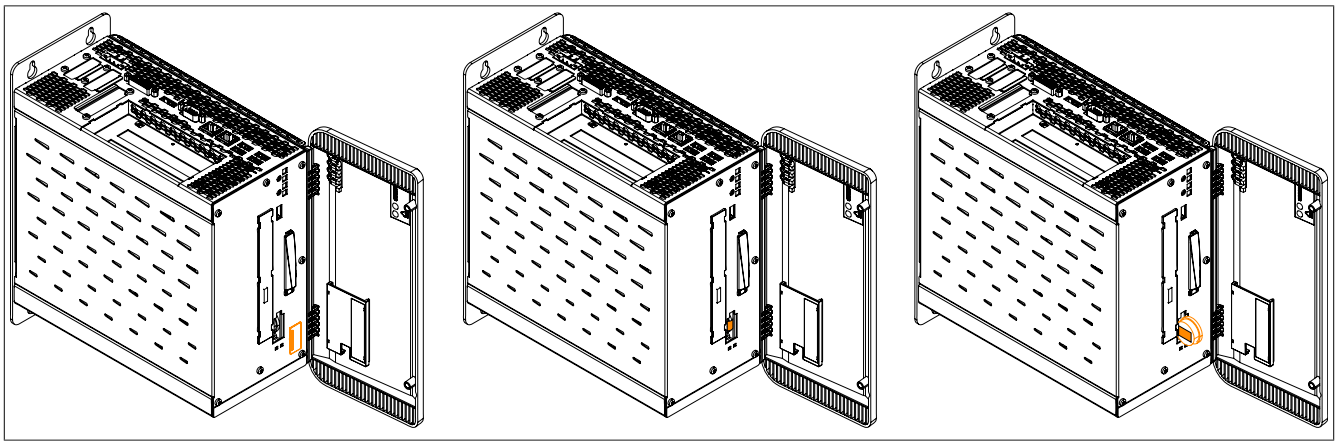

Figure 216: Replacing the battery

- To make the next battery replacement easier, be sure the removal strip is in place when inserting the battery.
- Reconnect the power supply to the B&R Industrial PC (plug in the power cable).
- Reset the date and time in BIOS.

Warning!

Lithium batteries are considered hazardous waste. Used batteries should be disposed of in accordance with applicable local regulations.

2 Exchanging a CFast card

Caution!

Power must be turned off before exchanging CFast cards.

Improper use of the ejection lever (e.g. too much force) may damage the ejection mechanism.

The CFast card can be exchanged quickly and easily by pressing the ejector (see image) with a pointed object such as a pen.

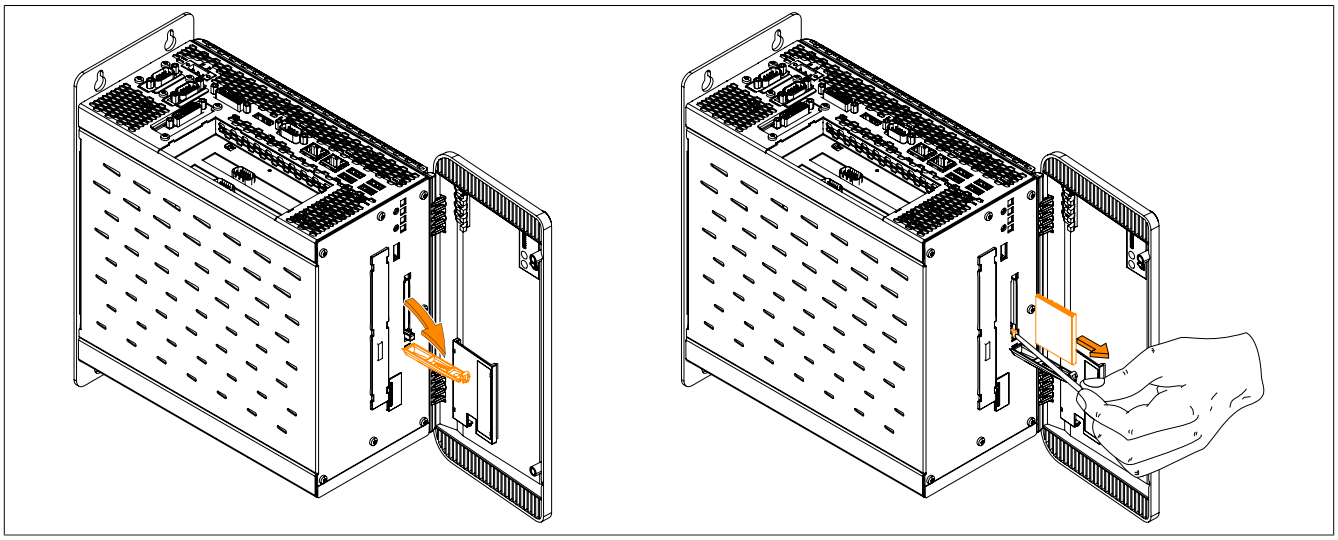

Figure 217: Exchanging a CFast card

3 Installing interface options

Information:

Please note that not every interface option can be installed in interface slots 1 and 2. For more information, see "IF option 1 slot" on page 61 and "IF option 2 slot" on page 61.

Depending on the IF option being used, it may be necessary to load the default settings in BIOS Setup after replacement or installation (see "Save & Exit" on page 272).

1. Disconnect the power supply to the B&R Industrial PC.
2. Touch the housing or ground connection in order to discharge any electrostatic charge from your body.
3. Open the front cover. The Torx screws (T10) behind the cover that are marked in the image must then be removed. The number of Torx screws can vary depending on the system unit.

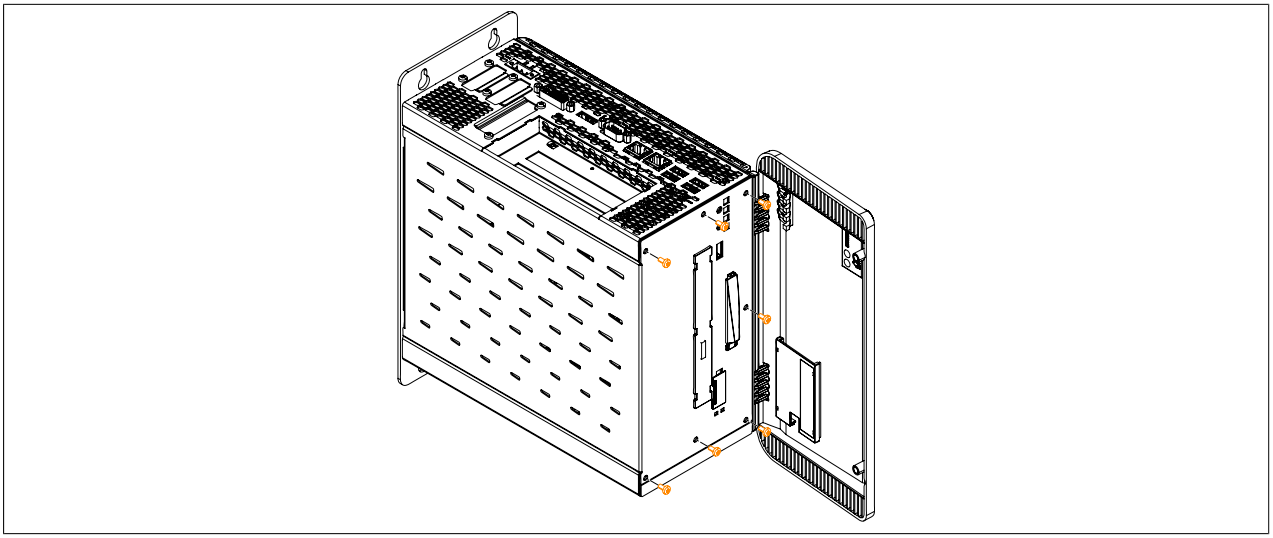

Figure 218: Removing the Torx screws for the side cover

4. After the screws have been removed, the side cover can be removed by sliding it first toward the front and then to the side.

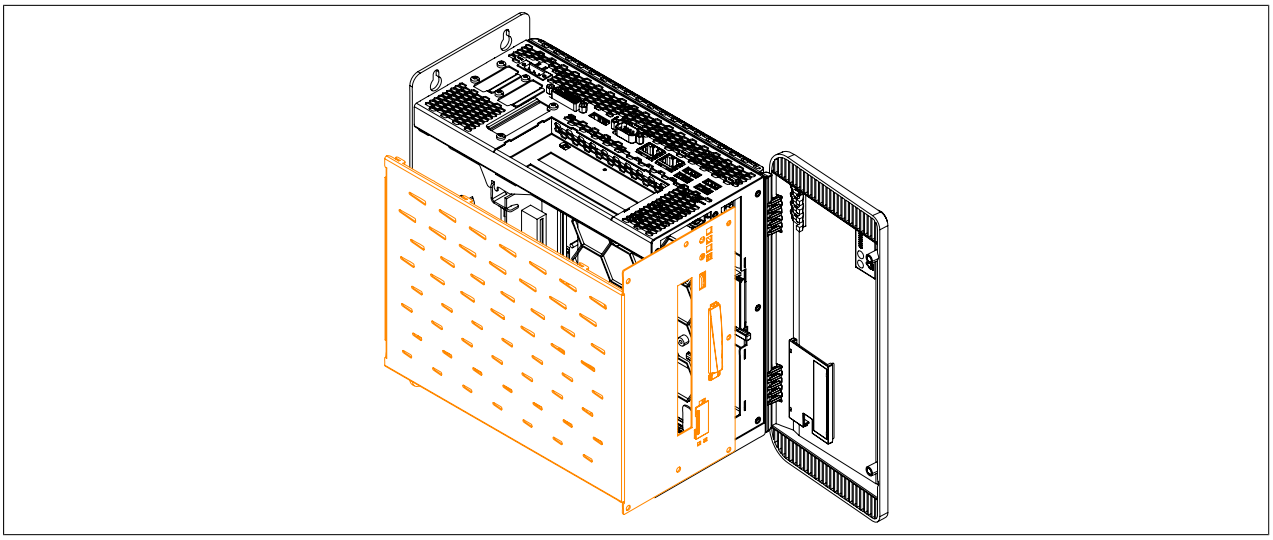

Figure 219: Removing the side cover

5. Remove the plastic slot cover and the marked Torx screws (T10) as well as the metal slot cover.

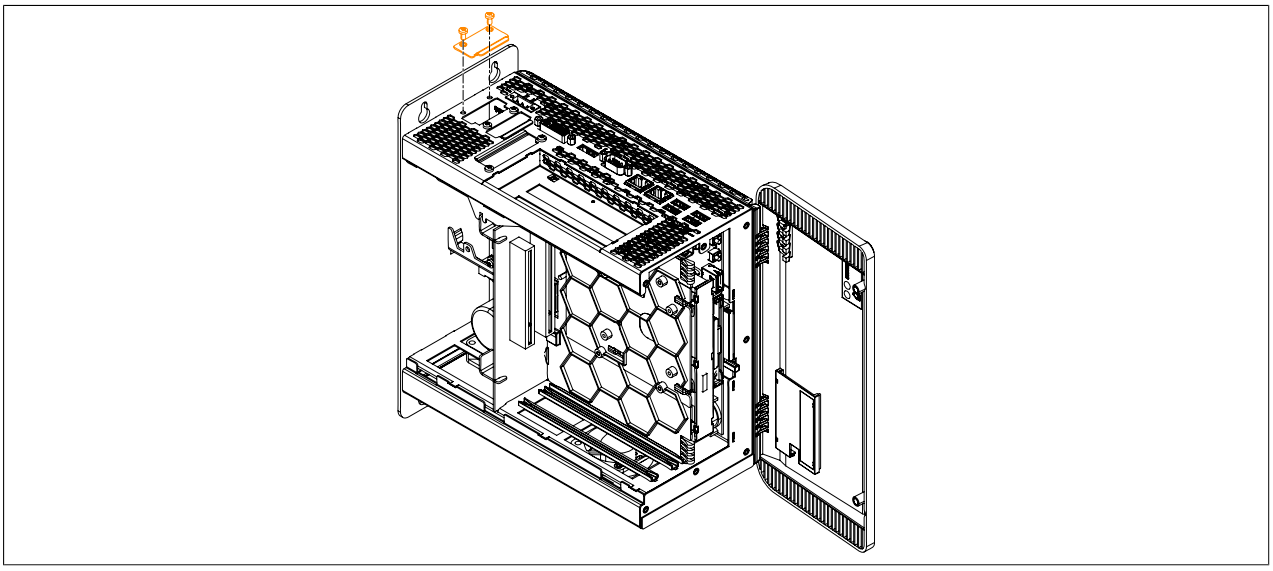

Figure 220: Removing the Torx screws and slot cover

6. Insert the interface option into the slot.

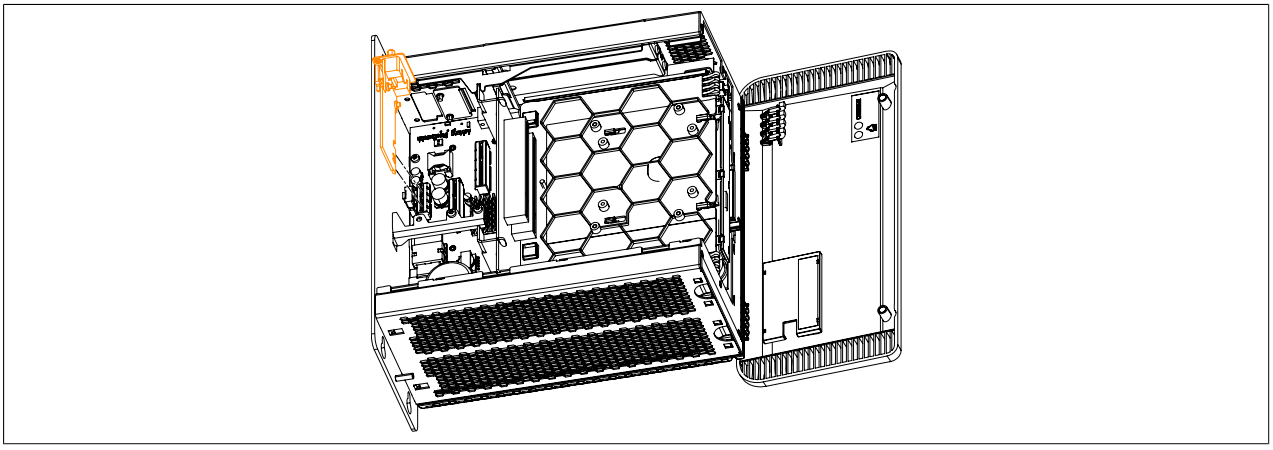

Figure 221: Installing the interface option

7. Secure the interface option to the B&R Industrial PC using the Torx screws (T10).

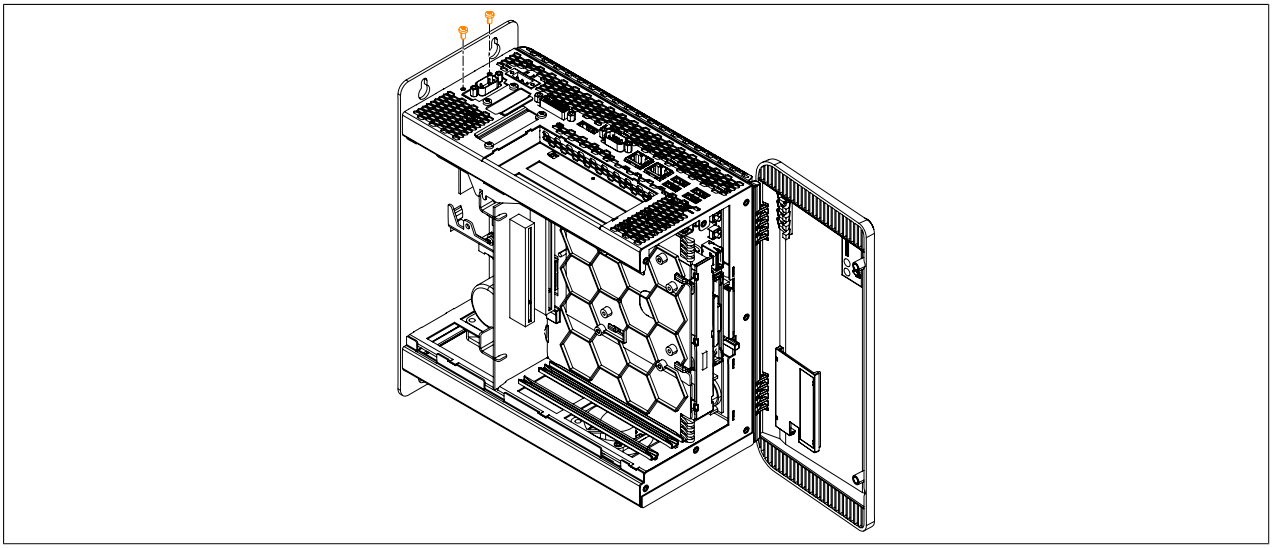

Figure 222: Securing the interface option

8. Attach the side cover.

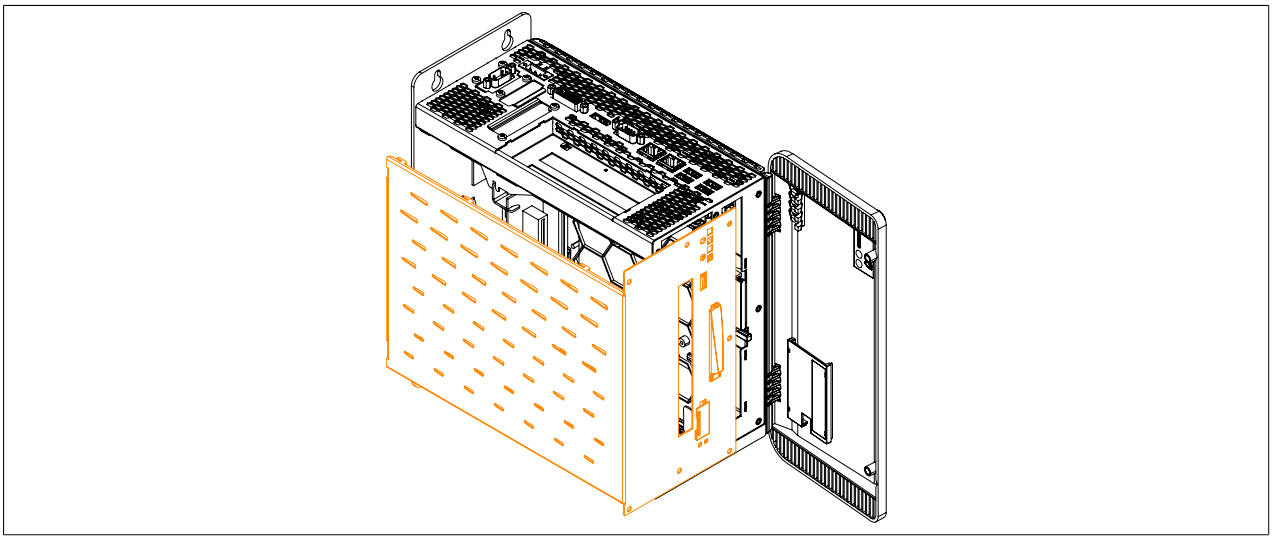

Figure 223: Replacing the side cover

9. Secure the side cover to the B&R Industrial PC using the same Torx screws (T10) as before.

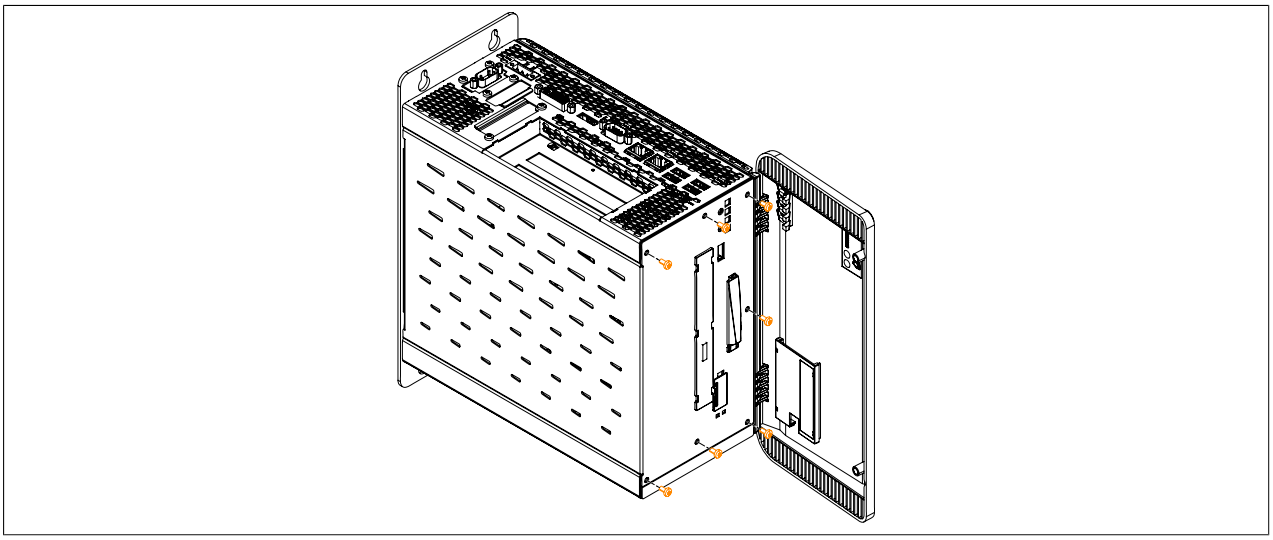

Figure 224: Securing the side cover

10. Once installed successfully, the interface option must be enabled in BIOS. This is done by launching BIOS when booting the system, loading the default BIOS values and then saving the settings. For additional information, see "Save & Exit" on page 272.

4 Installing monitor/panel options

Information:

After replacement or installation, it may be necessary to load the setup defaults in BIOS (see "Save & Exit" on page 272).

1. Disconnect the power supply to the B&R Industrial PC.
2. Touch the housing or ground connection in order to discharge any electrostatic charge from your body.
3. Open the front cover. The Torx screws (T10) behind the cover that are marked in the image must then be removed. The number of Torx screws can vary depending on the system unit.

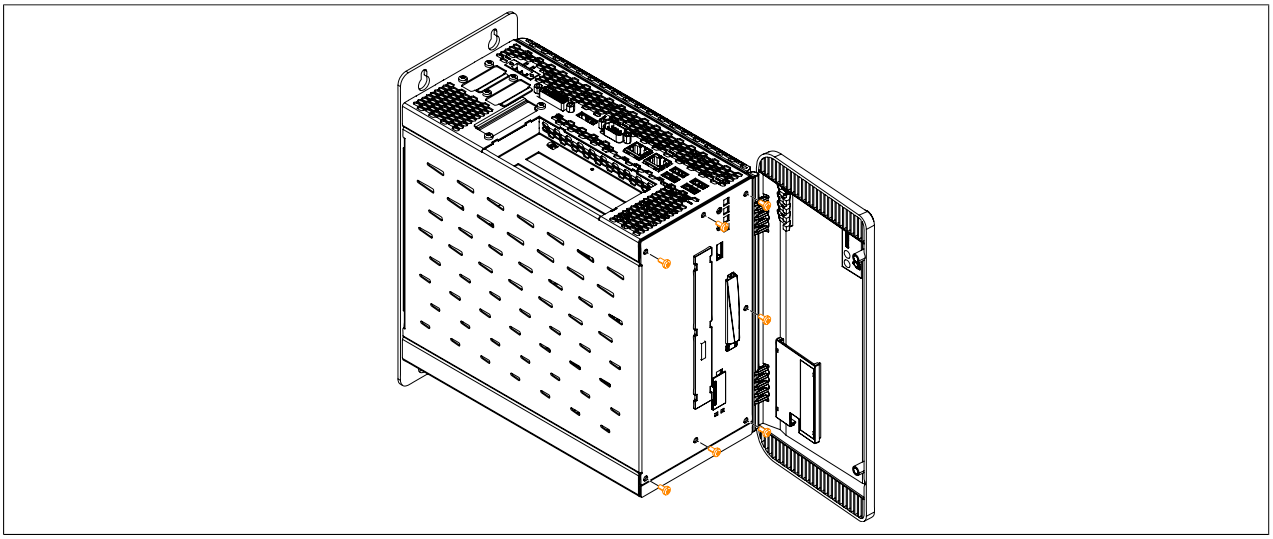

Figure 225: Removing the Torx screws for the side cover

4. After the screws have been removed, the side cover can be removed by sliding it first toward the front and then to the side.

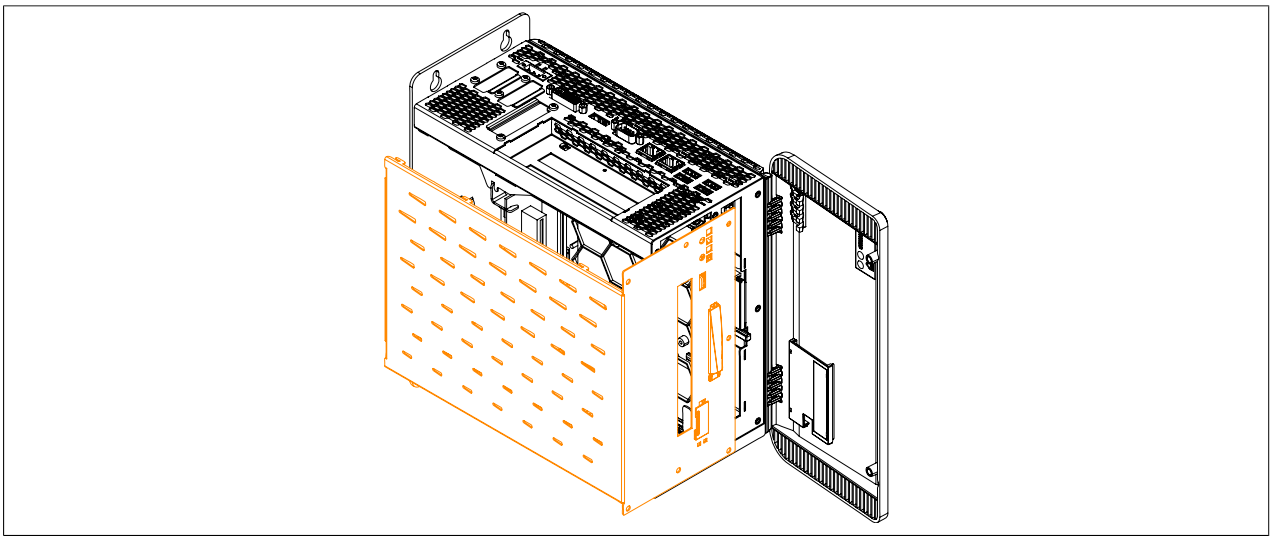

Figure 226: Removing the side cover

5. Remove the plastic slot cover and the marked Torx screws (T10) as well as the metal slot cover.

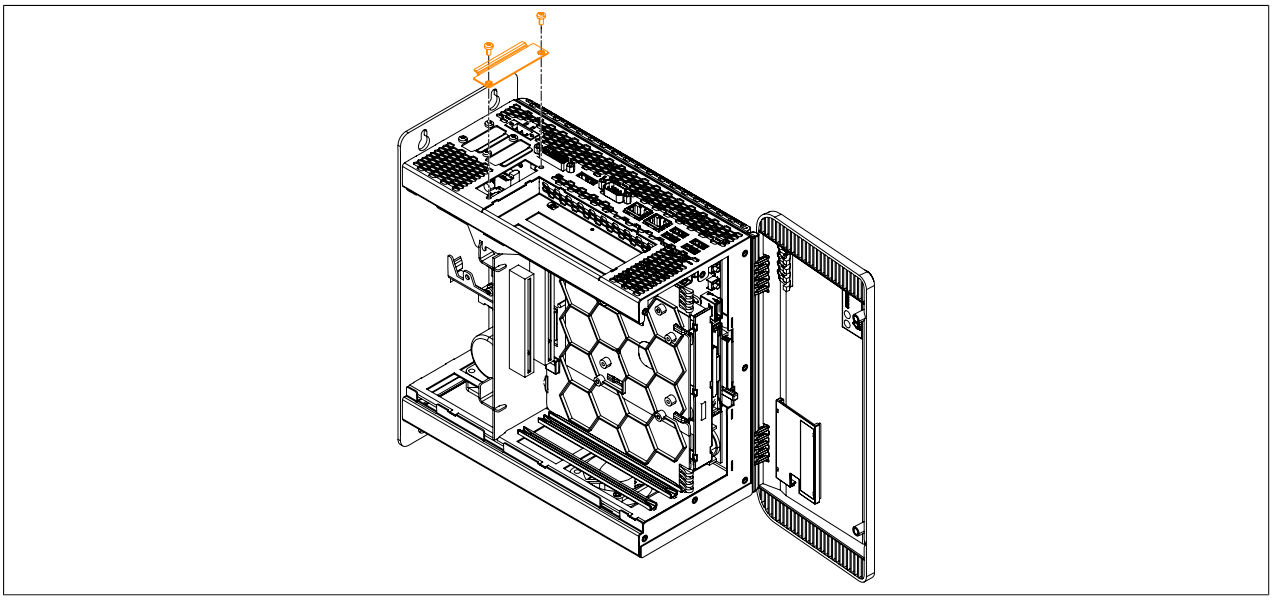

Figure 227: Removing the Torx screws and slot cover

6. Insert the monitor/panel option into the slot.

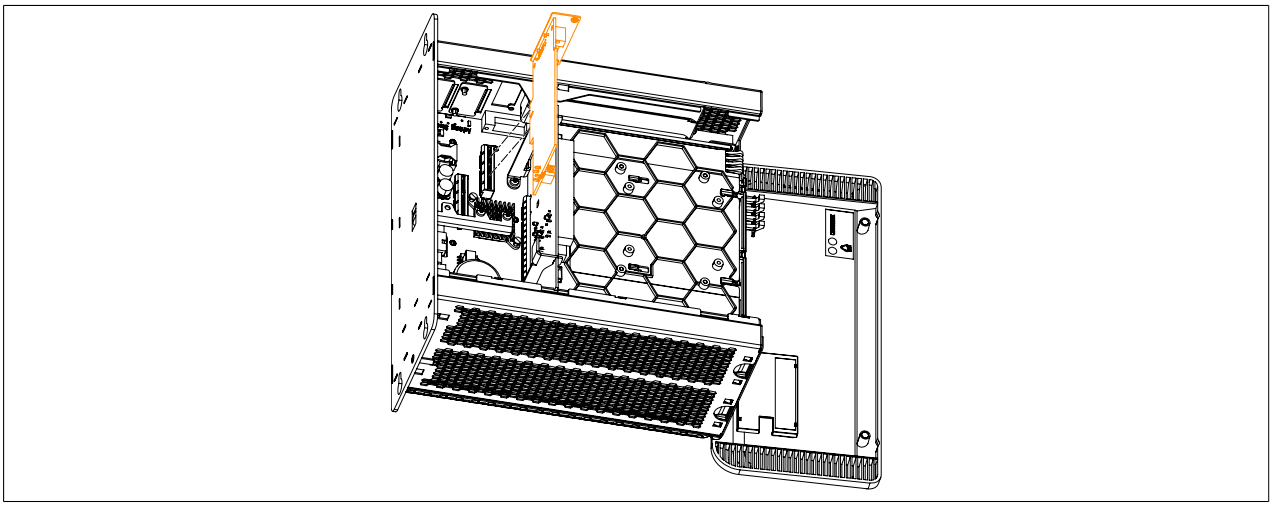

Figure 228: Inserting the monitor/panel option into the APC910

7. Secure the monitor/panel option to the B&R Industrial PC using the Torx screws (T10).

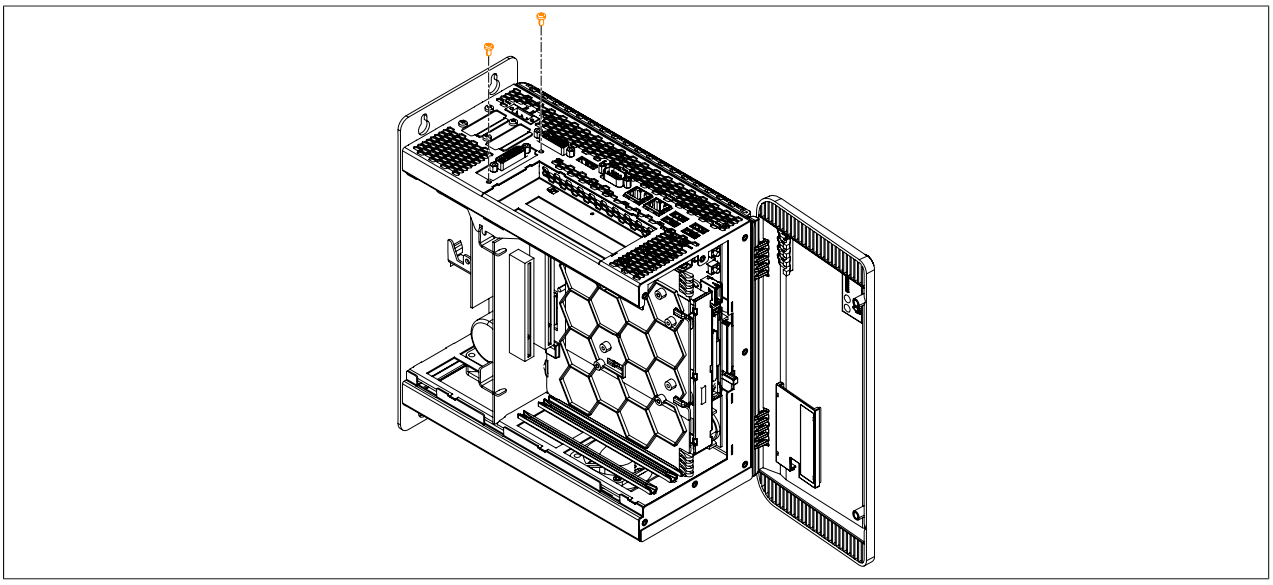

Figure 229: Securing the monitor/panel option using the Torx screws

8. Attach the side cover.

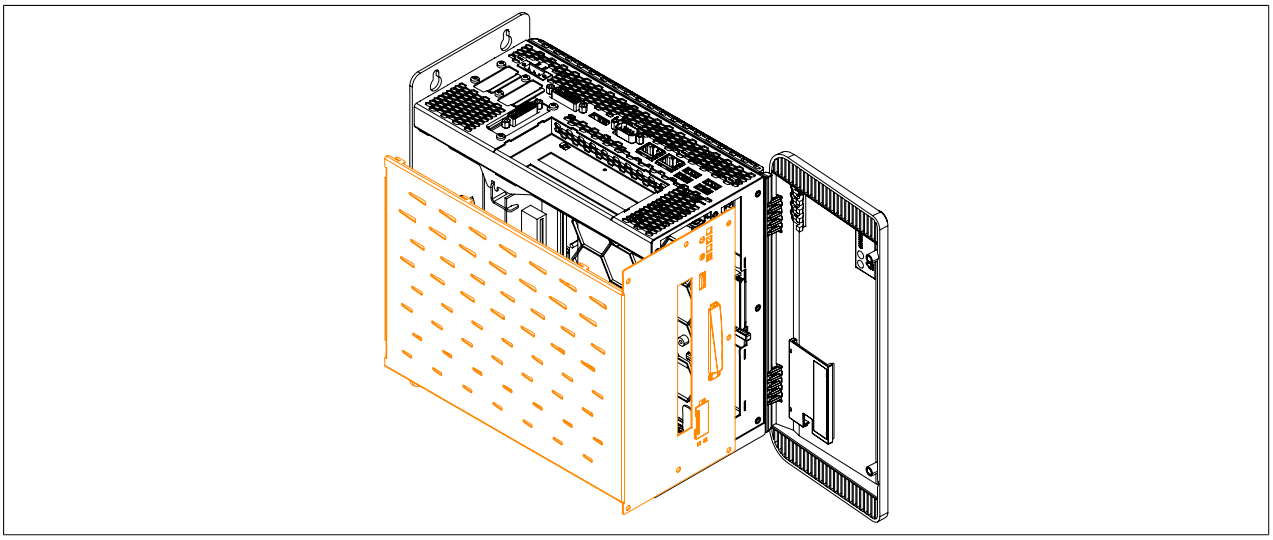

Figure 230: Replacing the side cover

9. Secure the side cover to the B&R Industrial PC using the same Torx screws (T10) as before.

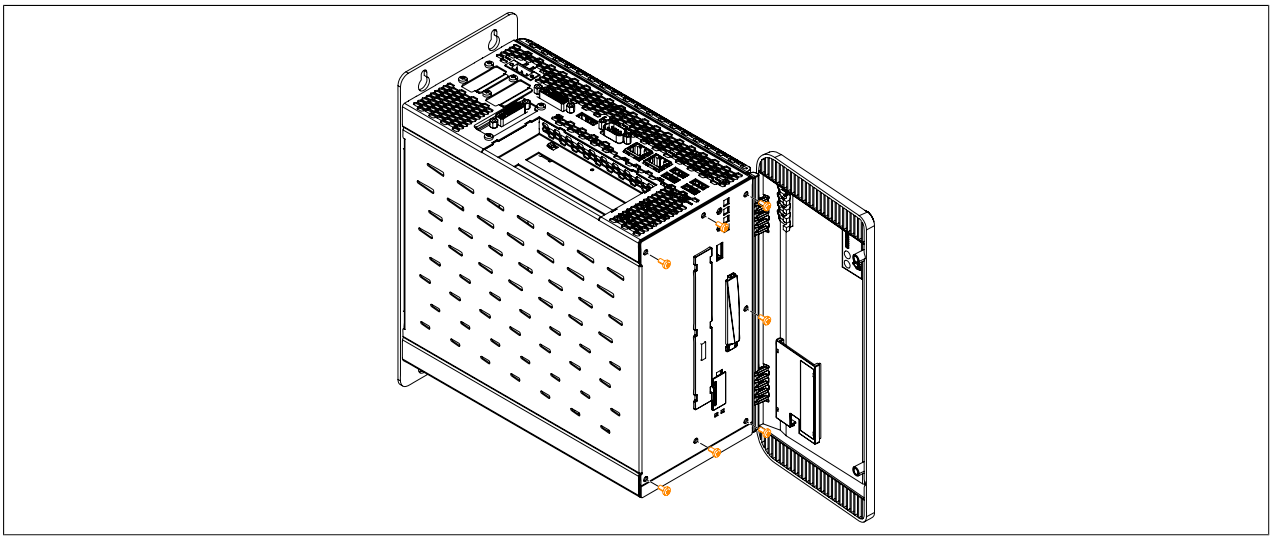

Figure 231: Securing the side cover

10. Once installed successfully, the monitor/panel option must be enabled in BIOS. This is done by launching BIOS when booting the system, loading the default BIOS values and then saving the settings. For additional information, see "Save & Exit" on page 272.

5 Installing and exchanging slide-in compact drives

1. Disconnect the power supply to the B&R Industrial PC.
2. Touch the housing or ground connection in order to discharge any electrostatic charge from your body.
3. Open the front cover. The Torx screws (T10) behind the cover that are marked in the image must then be removed. The number of Torx screws can vary depending on the system unit.

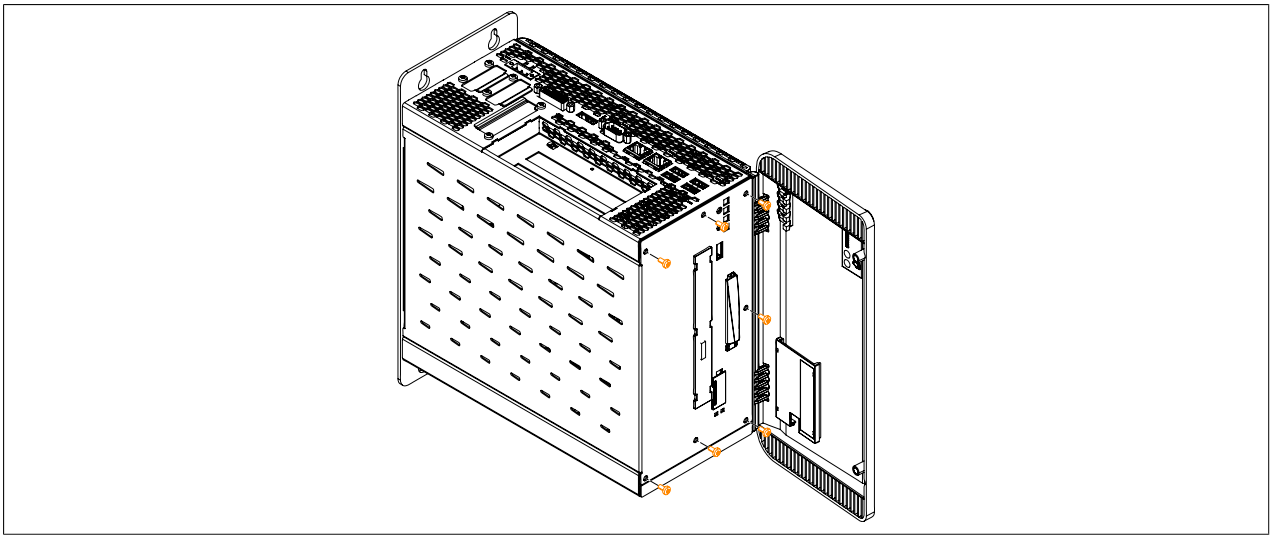

Figure 232: Removing the Torx screws for the side cover

4. After the screws have been removed, the side cover can be removed by sliding it first toward the front and then to the side.

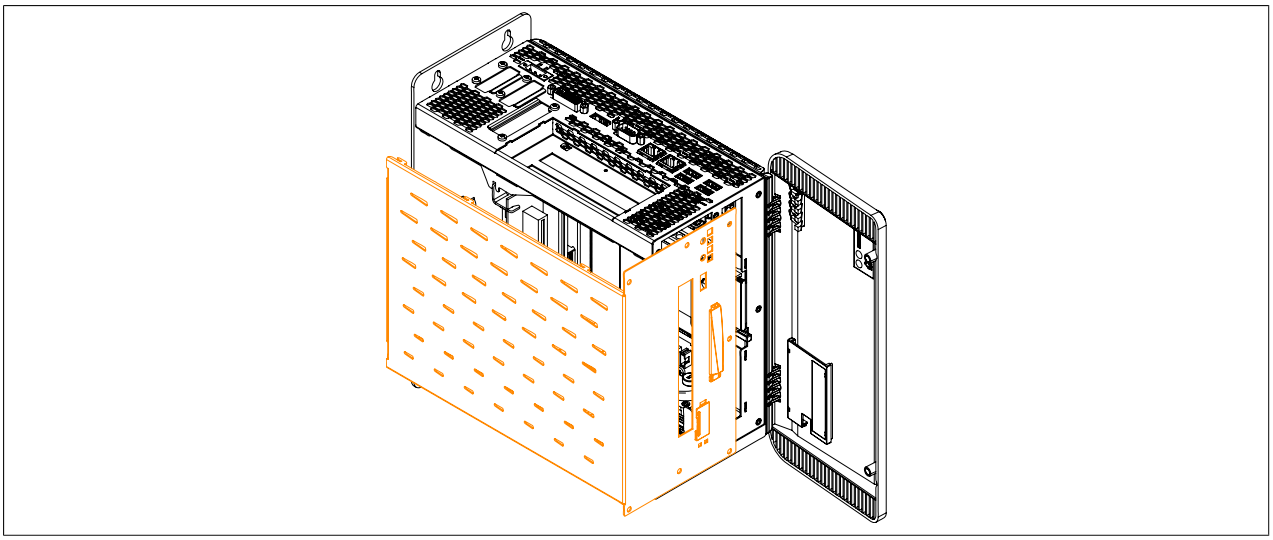

Figure 233: Removing the side cover

5. Free the plastic removal strip fastened to the side of the slide-in compact drive. Remove the slide-in compact drive from the Automation PC 910 by pulling firmly on the removal strip.
   When inserting a slide-in compact drive, be sure to align it with the guide rails. Tuck the removal strip back between the drive and the frame (as it was before it was pulled out).

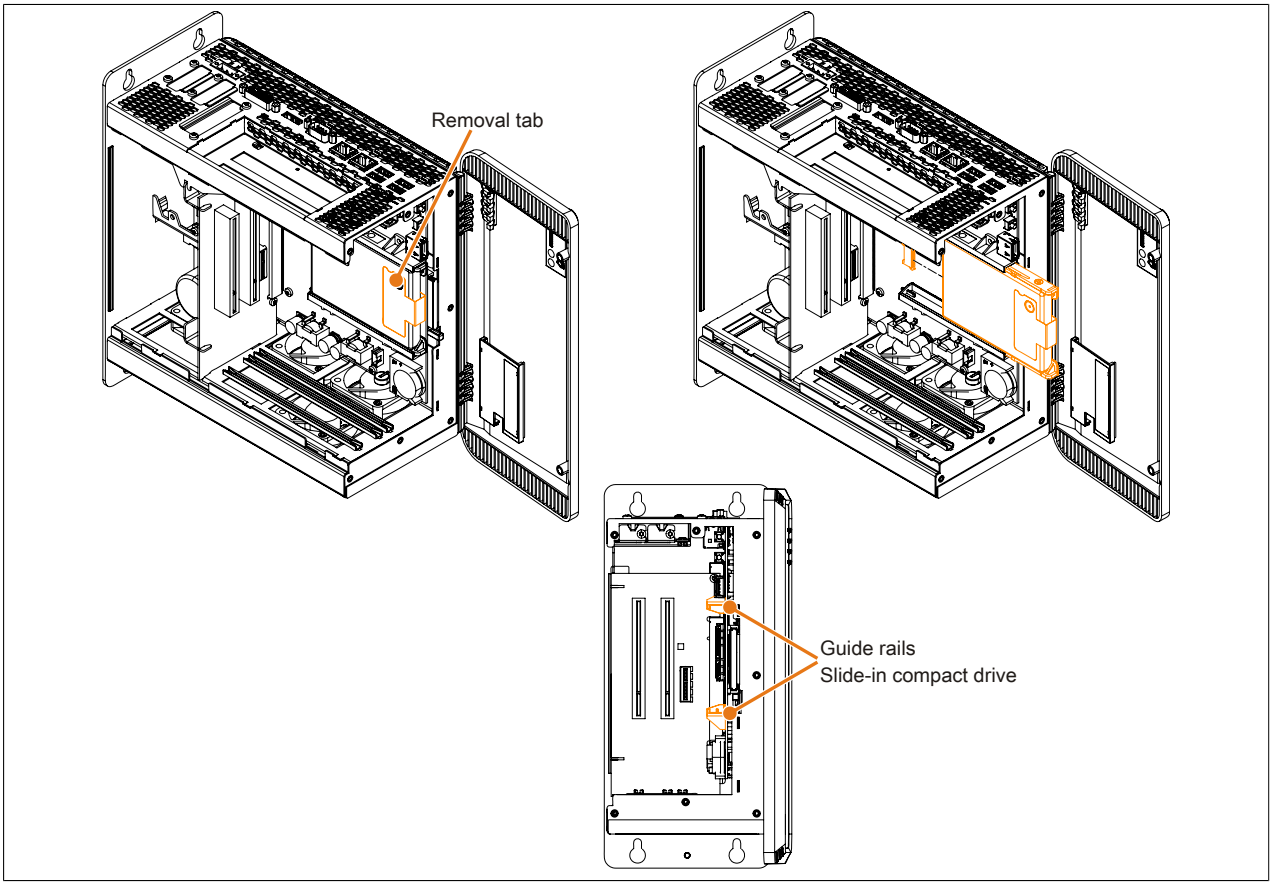

Figure 234: Installing/Exchanging the slide-in compact drive

6. Attach the side cover.

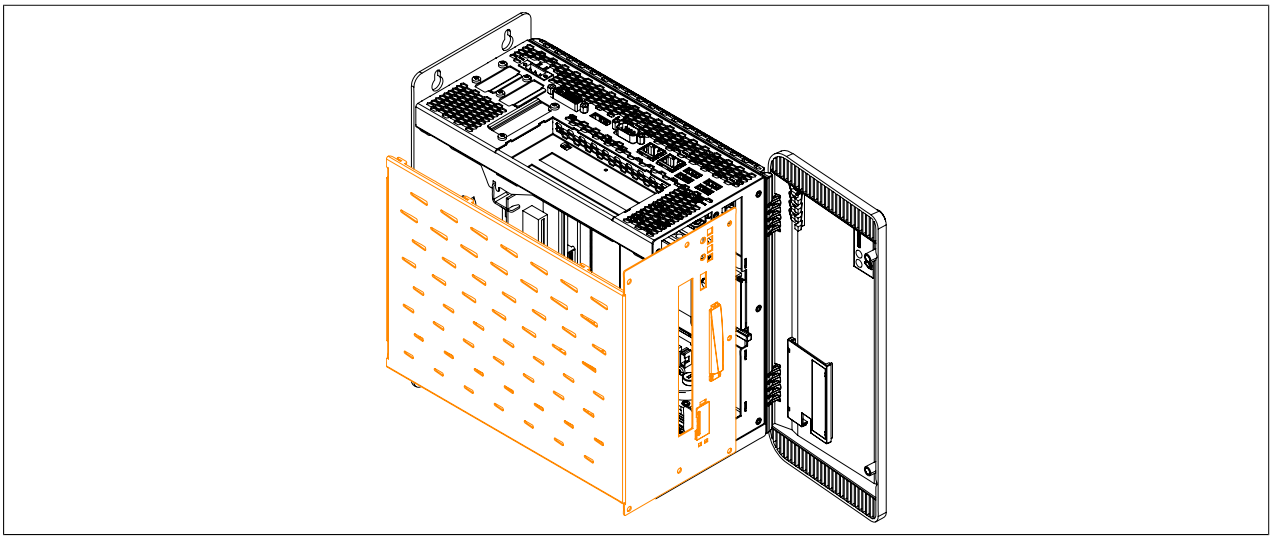

Figure 235: Replacing the side cover

7. Secure the side cover to the B&R Industrial PC using the same Torx screws (T10) as before.

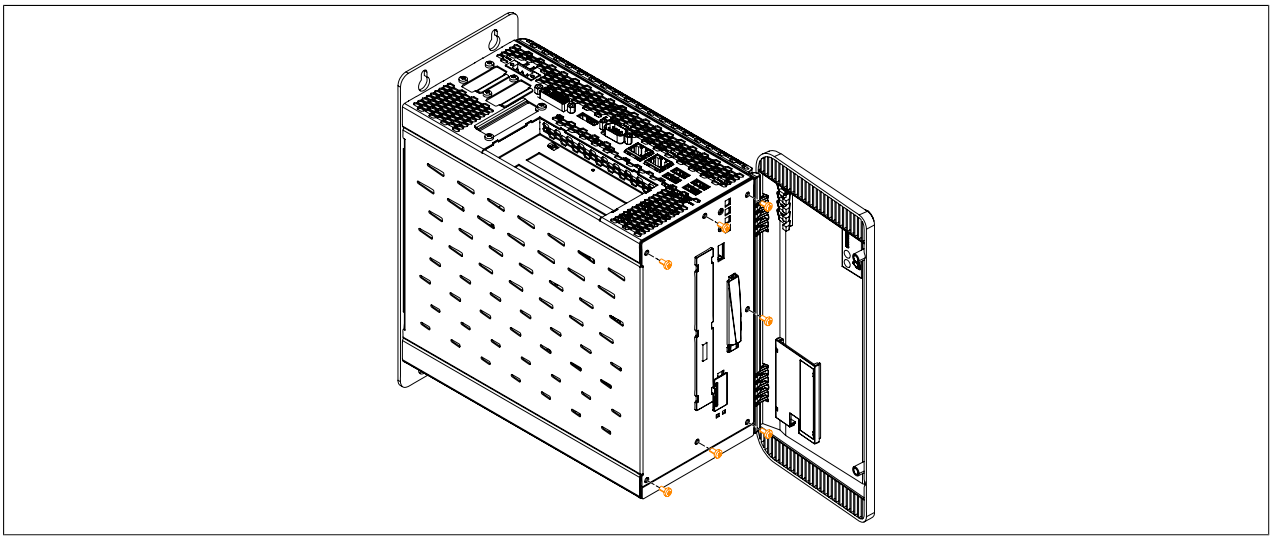

Figure 236: Securing the side cover

6 Installing and exchanging slide-in drives

1. Disconnect the power supply to the B&R Industrial PC.
2. Touch the housing or ground connection in order to discharge any electrostatic charge from your body.
3. Open the front cover. The Torx screws (T10) behind the cover that are marked in the image must then be removed. The number of Torx screws can vary depending on the system unit.

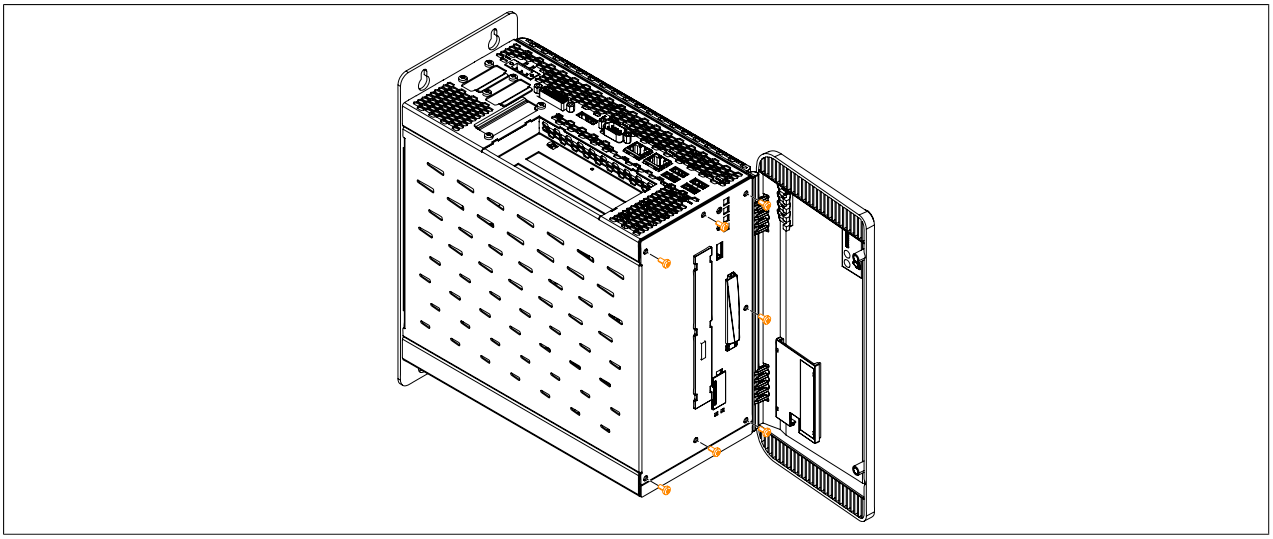

Figure 237: Removing the Torx screws for the side cover

4. After the screws have been removed, the side cover can be removed by sliding it first toward the front and then to the side.

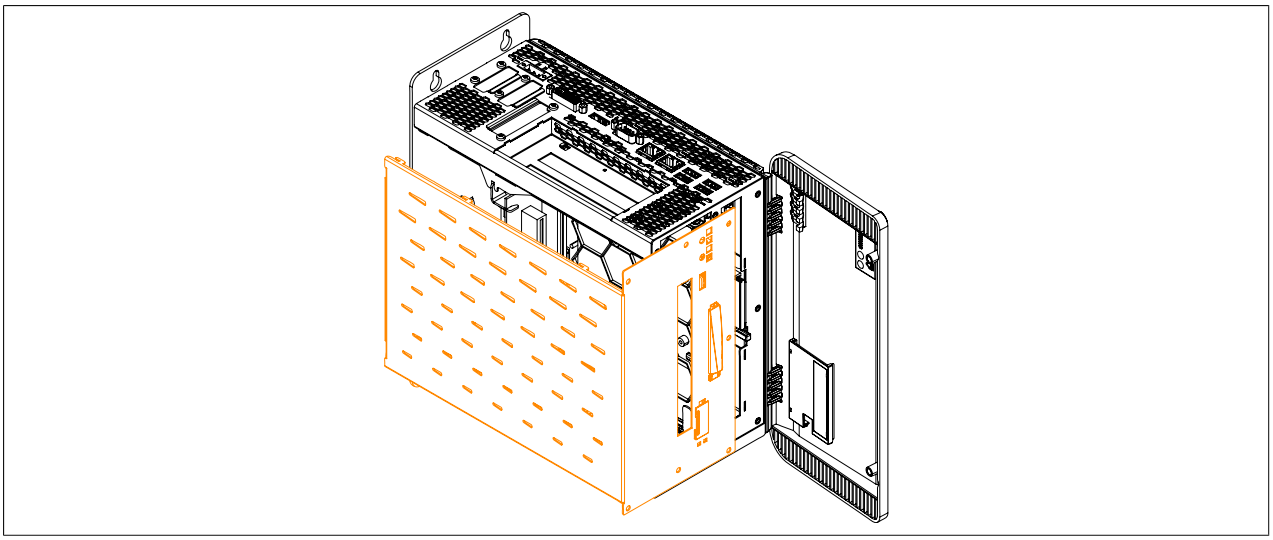

Figure 238: Removing the side cover

5. Install/Exchange the slide-in compact drive. The slide-in compact drive must slide into the guide rails and snap into the connector.

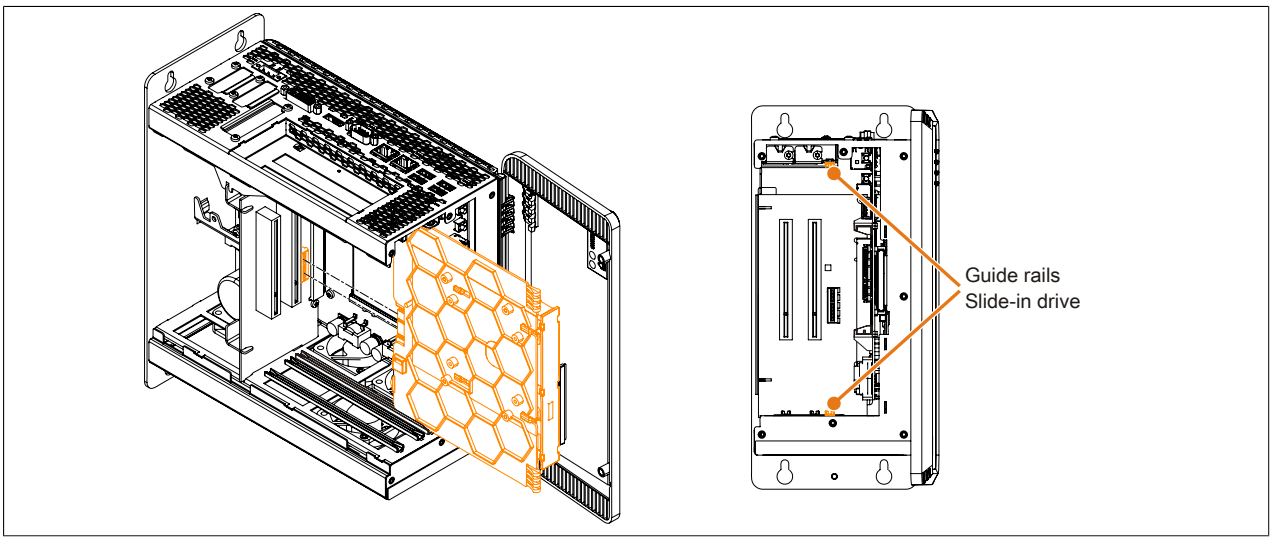

Figure 239: Installing/Exchanging the slide-in drive

6. Attach the side cover.

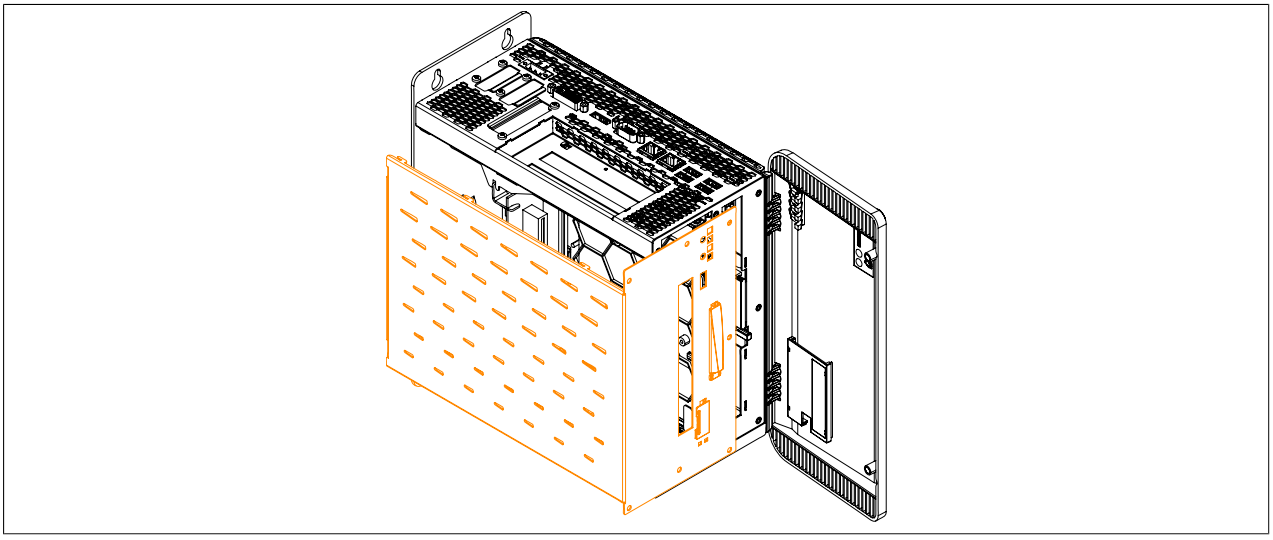

Figure 240: Replacing the side cover

7. Secure the side cover to the B&R Industrial PC using the same Torx screws (T10) as before.
   The slide-in slot cover must be installed in order to operate the 5AC901.SSCA-00 slide-in compact adapter.

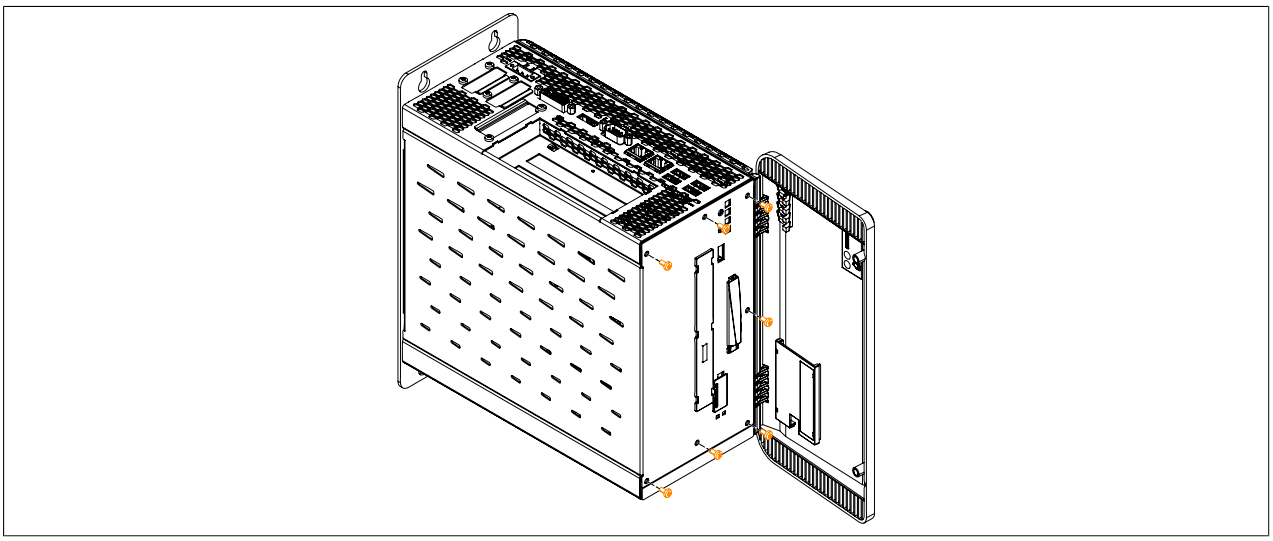

Figure 241: Securing the side cover

7 Installing PCI/PCIe cards

1. Disconnect the power supply to the B&R Industrial PC.
2. Touch the housing or ground connection in order to discharge any electrostatic charge from your body.
3. Open the front cover. The Torx screws (T10) behind the cover that are marked in the image must then be removed. The number of Torx screws can vary depending on the system unit.

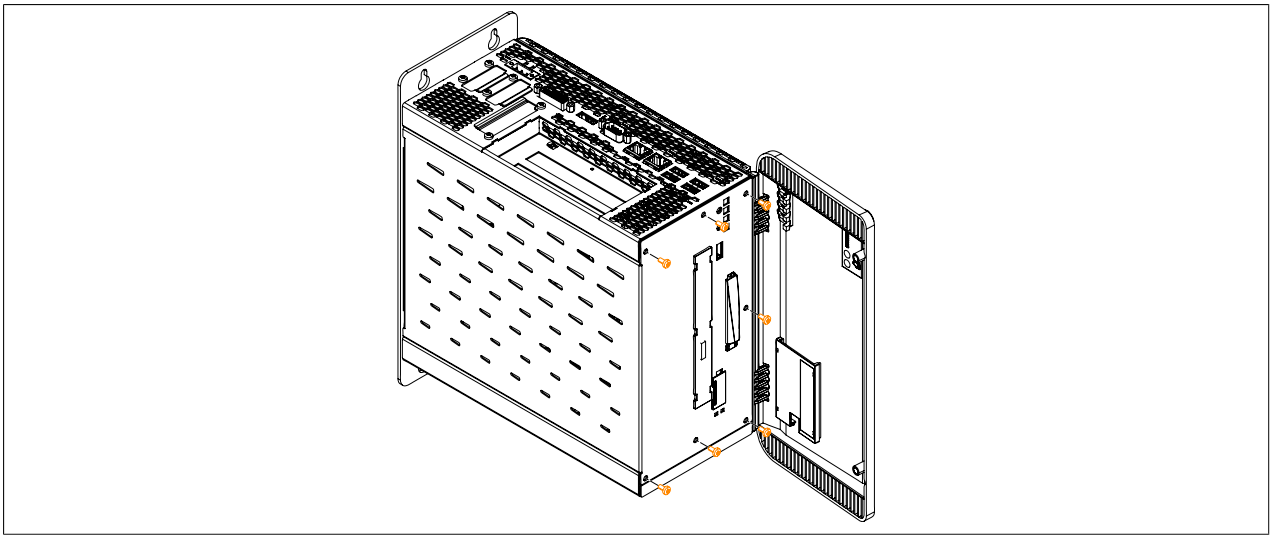

Figure 242: Removing the Torx screws for the side cover

4. After the screws have been removed, the side cover can be removed by sliding it first toward the front and then to the side.

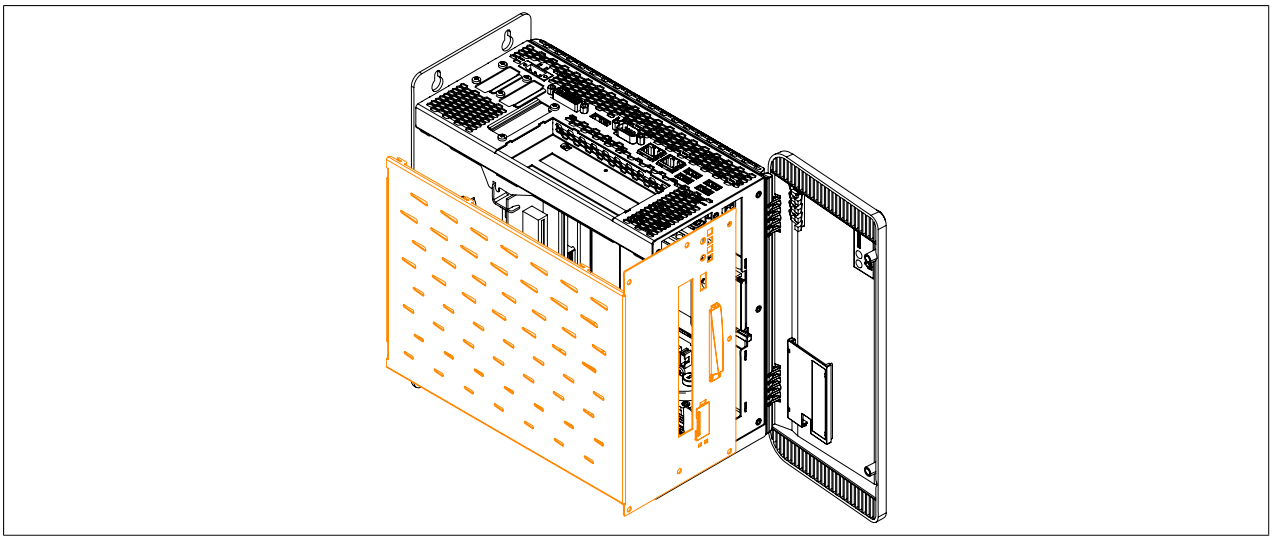

Figure 243: Removing the side cover

5. Remove the PCI slot cover. This is done by first removing the indicated Torx screws (T10) and then removing the cover.

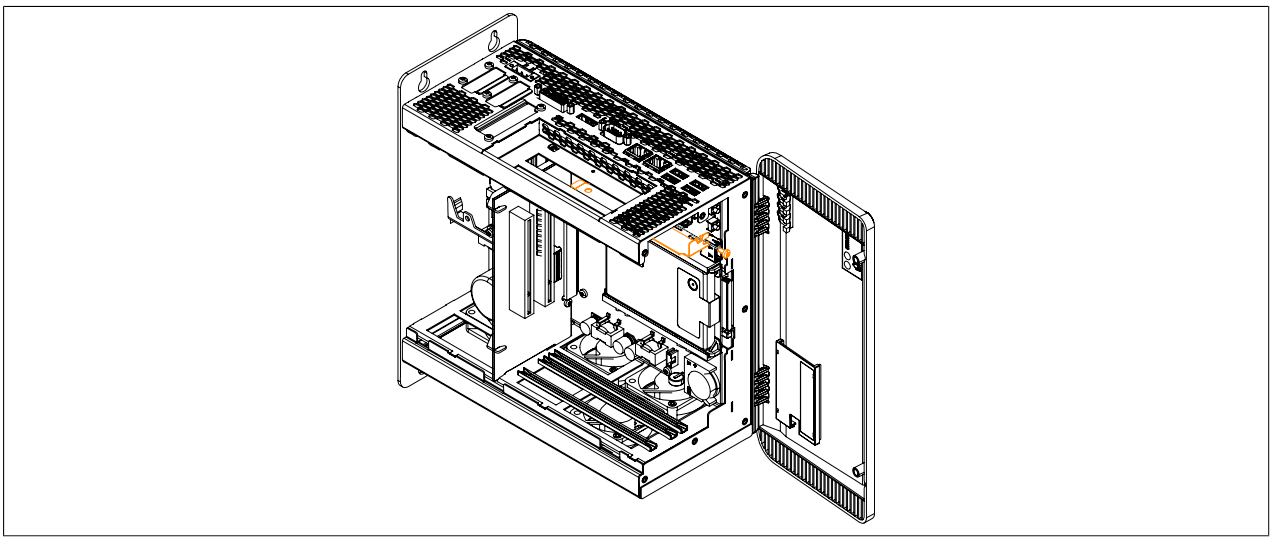

Figure 244: Removing the PCI/PCIe slot cover

6. Install or replace the PCI/PCIe card. Be sure to insert the PCI/PCIe card in the lower black guide rail. Fasten the PCI or PCIe card using the indicated (previously removed) Torx screws (T10).

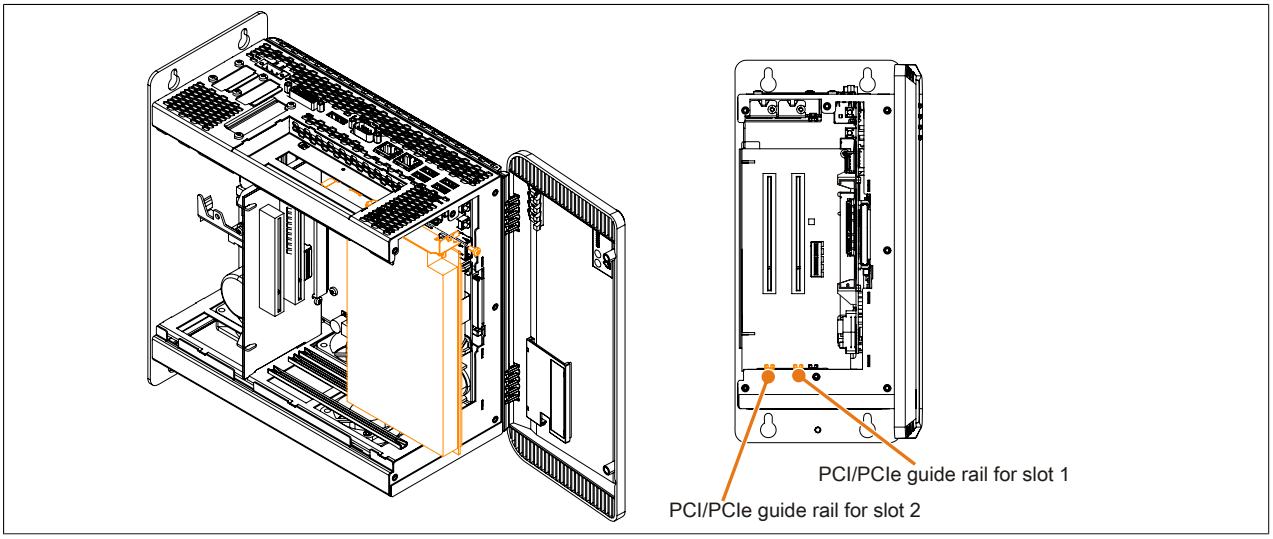

Figure 245: Installing/Replacing the PCI/PCIe card

7. Attach the side cover.

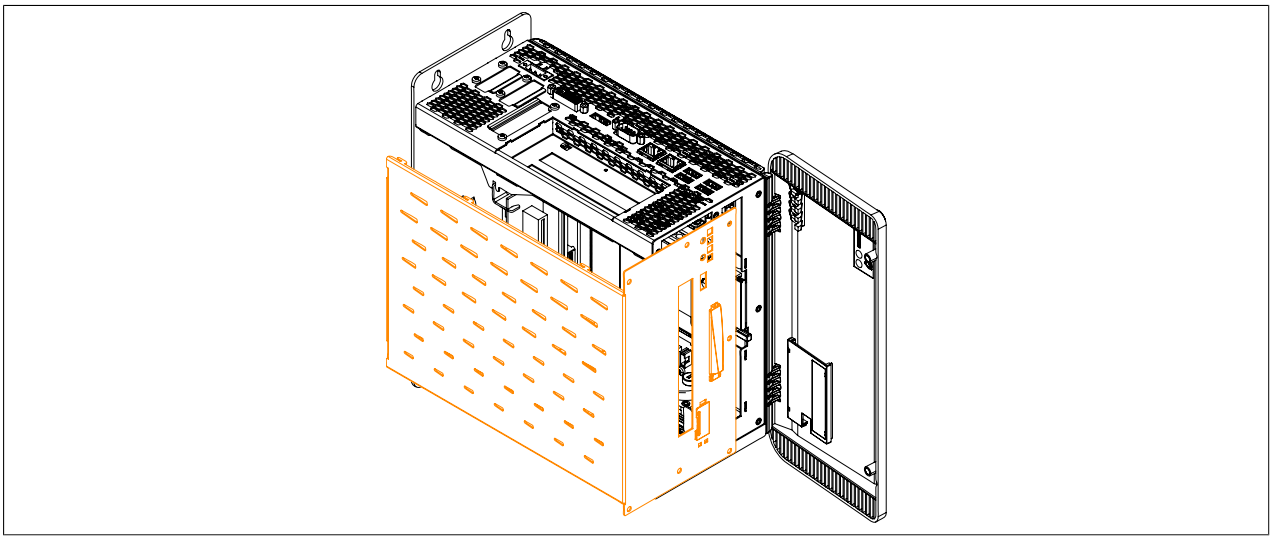

Figure 246: Replacing the side cover

8. Secure the side cover to the B&R Industrial PC using the same Torx screws (T10) as before.

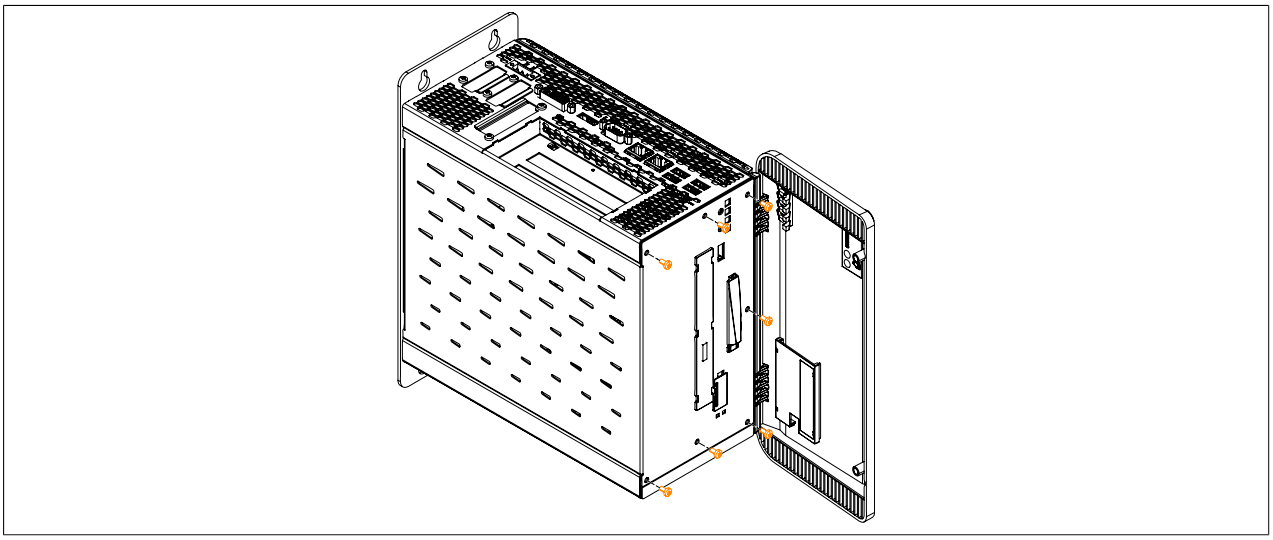

Figure 247: Securing the side cover

8 Installing and connecting the UPS battery unit

Information:

For information about installing the UPS IF option, see "Installing interface options" on page 379.

Information:

For information about installing the UPS IF option, see "Installing the interface option" on page .

Warning!

Do not open the UPS battery unit!

1. Disconnect the power supply to the B&R Industrial PC.
2. Install the battery unit. Information about the drilling template can be found in the technical data of the respective UPS battery unit. Ensure that the distance between the battery unit and the B&R Industrial PC allows them to be connected with the UPS cable (0.5 m, 1 m or 3 m).
   Installation requires 4 M5 screws, 4 washers and 1 screw lock (min. tightening torque 1.3 Nm; screw depth as per applicable DIN regulations and specific application). These are not included in delivery.
3. Connect the UPS cable to the battery unit. When doing so, make sure to connect the red and black wires to the power supply (orange screw clamp). Be sure to use the right terminal block (red wire for +, black wire for -)! Connect the white and brown wires (brown wire for 1, white wire for 2) to the temperature sensor (green screw clamp terminal block).

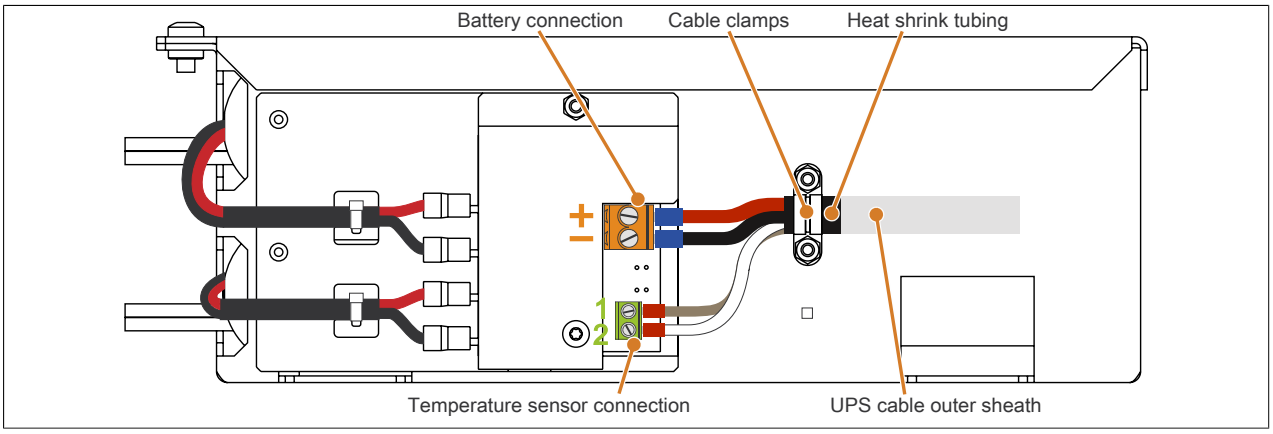

Figure 248: Connecting the UPS cable to the battery

4. Tighten the connected wires in the screw clamps with a screwdriver (max. tightening torque 0.4 Nm).
5. Loosen the two nuts (M3) on the cable clamp and feed the UPS cable through.
6. Fasten the UPS cable using the cable clamp. Tighten the previously removed nuts onto the cable clamp in alternating order (max. tightening torque 0.35 Nm).
7. Connect the 4-pin screw clamp to the UPS IF option and tighten the two screws with a screwdriver (max. tightening torque 0.4 Nm).

9 Replacing fan filters

1. Disconnect the power supply to the B&R Industrial PC.
2. Touch the housing or ground connection in order to discharge any electrostatic charge from your body.
3. Open the front cover.
4. To remove the fan filter from the B&R Industrial PC, push up on the locking mechanism while pulling the fan filter outward. The number of locking mechanisms may vary depending on the system unit.

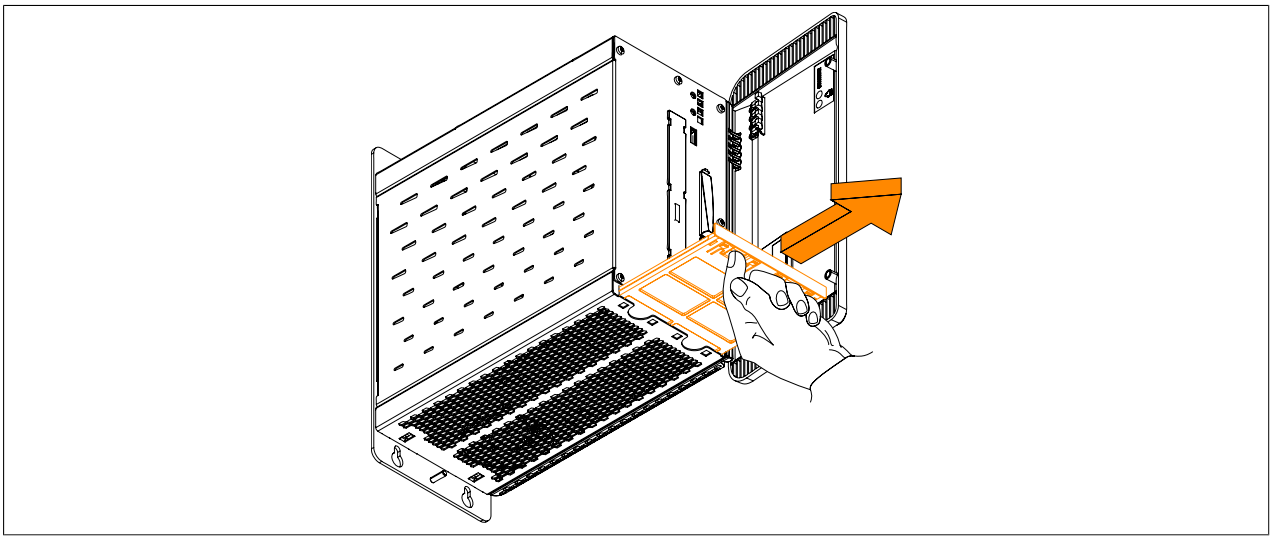

Figure 249: Removing the fan filter from the APC910

Information:

The dust filter must be inspected at regular intervals determined by the amount of dust in the operating environment.

10 Replacing fan kits

1. Disconnect the power supply to the B&R Industrial PC.
2. Touch the housing or ground connection in order to discharge any electrostatic charge from your body.
3. Open and remove the front cover.

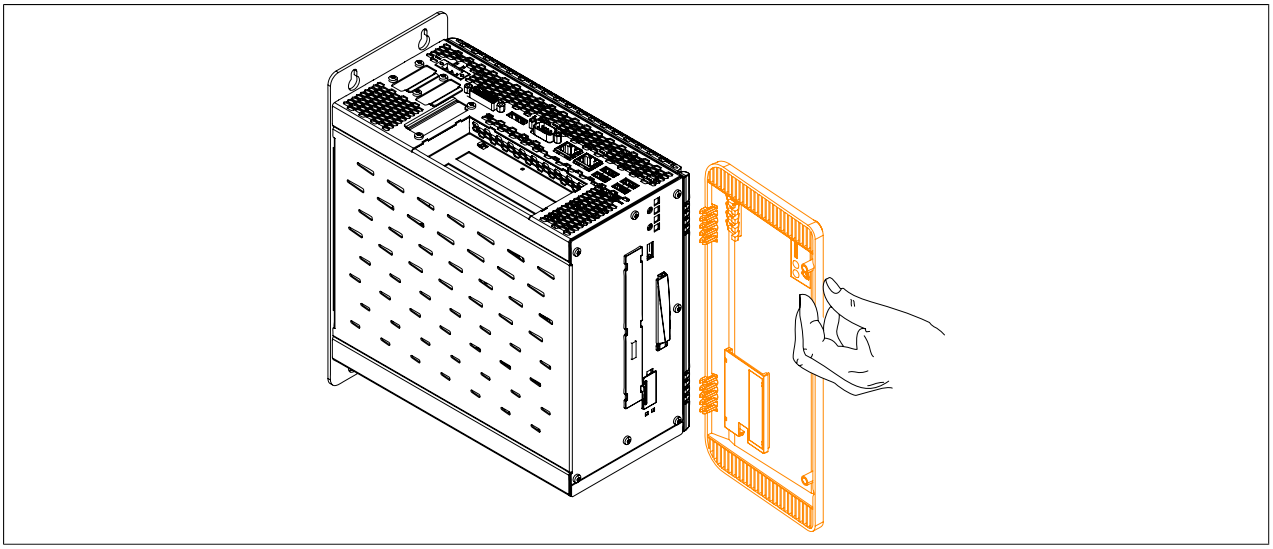

Figure 250: Removing the front cover

4. Remove the heat sink cover. The Torx screws (T15) that are marked in the image must be removed.

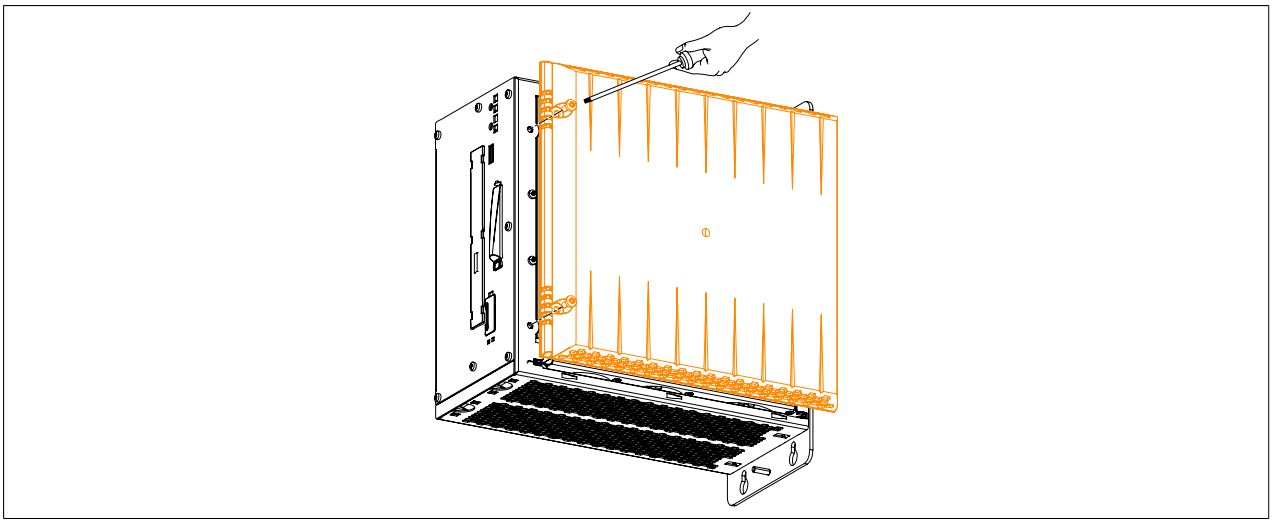

Figure 251: Removing the heat sink cover

5. Remove the Torx screws (T10) from the fan kit that are marked in the following image and unplug the fan kit cable from the mainboard.

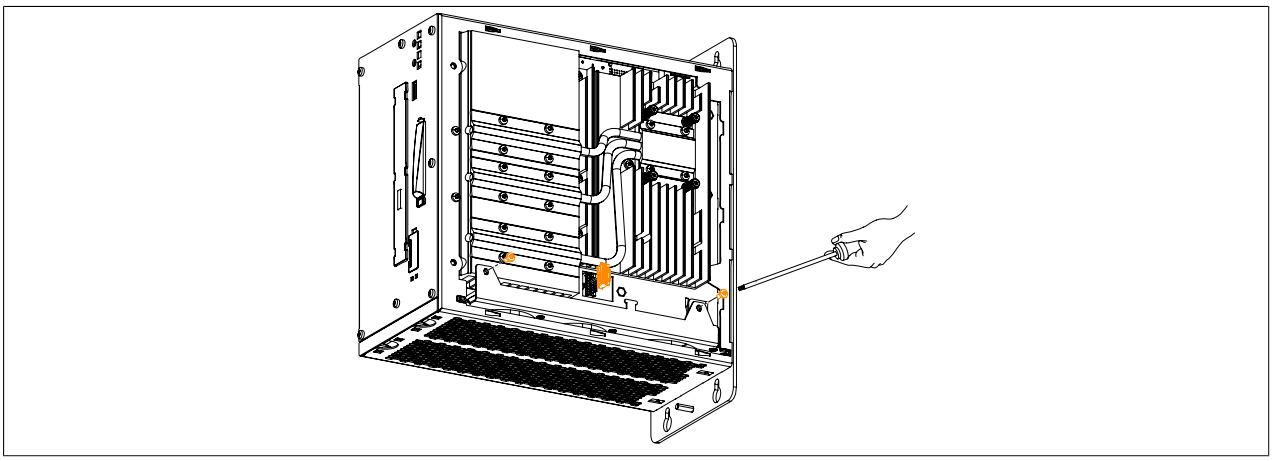

Figure 252: Removing the Torx screws and fan cable

6. The fan kit can now be removed from the Automation PC 910.

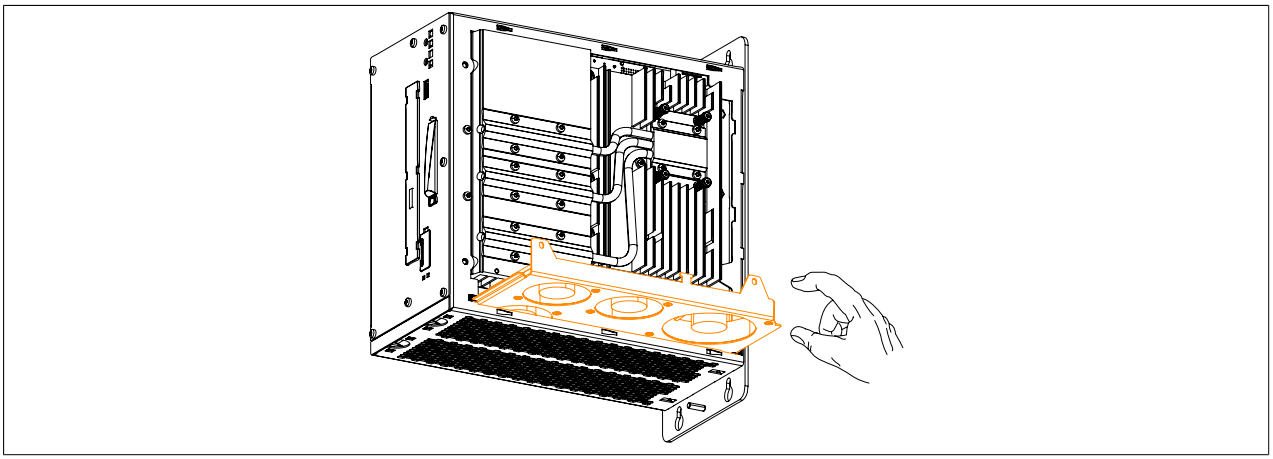

Figure 253: Removing the fan kit from the APC910

7. A new fan kit can now be installed.
8. The Automation PC 910 can now be re-assembled by carrying out these instructions in reverse.
9. If a fan kit is being installed for the first time (i.e. fan kit previously not used in device), then it still needs to be programmed. To do so, follow the instructions in the "Programming fan kit data" section.
   If a fan kit has been removed from the device and is not being replaced, then its data must be deleted. To do so, follow the instructions in the "Deleting fan kit data" section.

> **Information:**
>
> **If a fan kit has been replaced, then an incorrect serial number will be displayed. To display the correct serial number, the fan kit data must be deleted and reprogrammed.**

10. After the fan kit has been programmed, the BIOS default values must be loaded and the settings saved. For additional information, see "Save & Exit" on page 272.

Programming fan kit data

> **Information:**
>
> **If a fan kit is being installed for the first time (i.e. fan kit previously not used in device), then it still needs to be programmed.**

1. Boot the B&R Industrial PC and type the following on the command line:
   `mtxcsvc i fanfset` - Checks whether the fan kit has already been programmed
2. If the fan kit has not yet been programmed, this can be done by typing in the following:
   `mtxcsvc u fanfset "fn"` - The path of the file and filename must be specified in place of "fn".

Deleting fan kit data

Information:

If a fan kit has been removed from the device and is not being replaced, then its data must be deleted.

1. Boot the B&R Industrial PC and type the following on the command line:
   `mtxcsvc i fanfset` - Checks whether the fan kit has already been programmed
2. Since a fan kit was already installed, its data must be deleted. This is done by typing the following on the command line:
   `mtxcsvc d fanfset` - Deletes the data for the previously installed fan kit

11 Connecting an external device to the mainboard

A male connector on the mainboard allows +5 VDC and +12 VDC to be rerouted in order to provide power to special PCI cards, for example.

This voltage can be accessed using the "Internal supply cable" on page 372. The multi-pin connector is located near the battery and slide-in compact drive.

Multi-pin connector for external devices			
Pin	**Assignment**	**Power**	4-pin connector, male
1	+12 VDC	Max. 10 watts	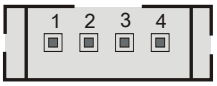
2	GND		
3	GND	Max. 5 watts	
4	+5 VDC		

Table 321: Multi-pin connector on the mainboard - Pinout

Connections are protected with a 1 A multi-fuse.

1. Disconnect the power supply to the B&R Industrial PC.
2. Touch the housing or ground connection in order to discharge any electrostatic charge from your body.
3. Open the front cover. The Torx screws (T10) behind the cover that are marked in the image must then be removed. The number of Torx screws can vary depending on the system unit.

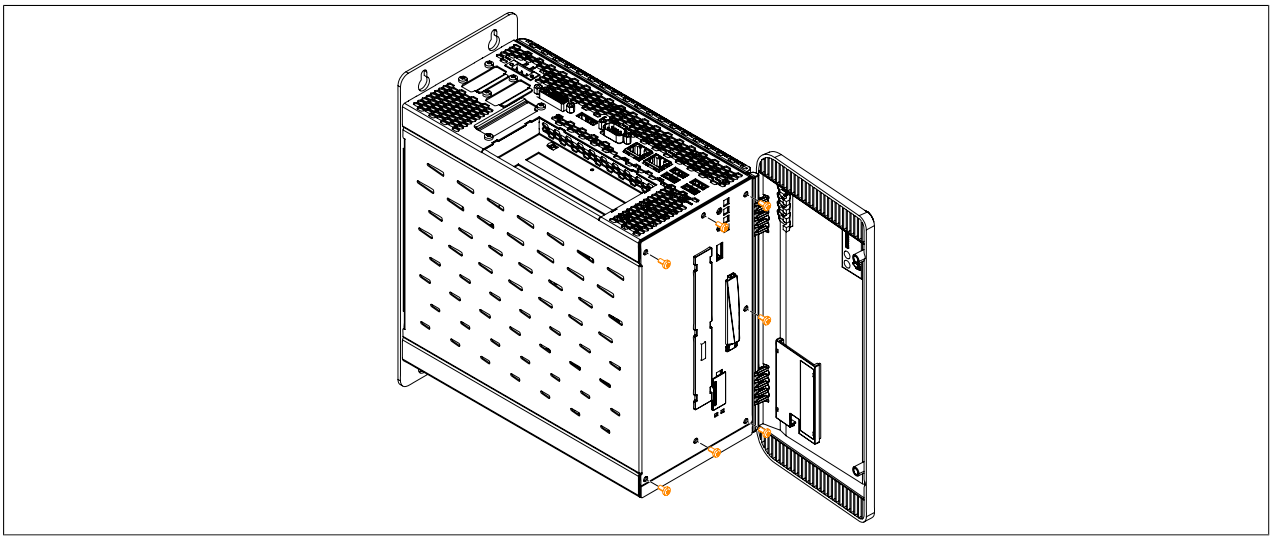

Figure 254: Removing the Torx screws for the side cover

4. After the screws have been removed, the side cover can be removed by sliding it first toward the front and then to the side.

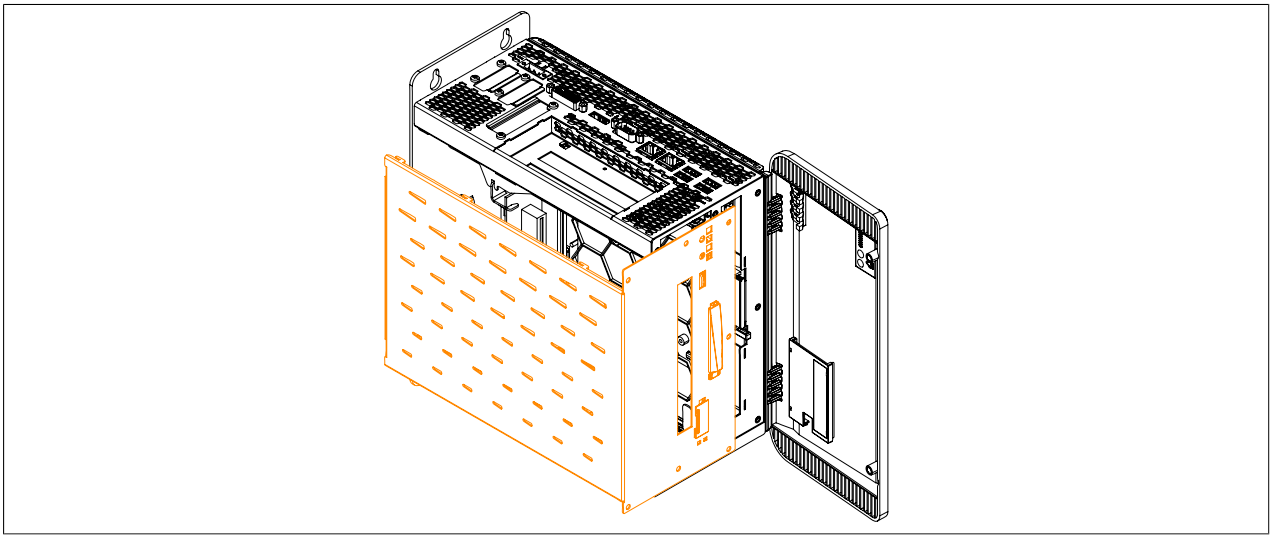

Figure 255: Removing the side cover

5. To access the multi-pin connector for external devices, it may be necessary to first remove any installed slide-in drives.

6. Plug the internal supply cable into the multi-pin connector for external devices on the mainboard. The springs on the supply cable connector must fit into the grooves of the multi-pin connector.

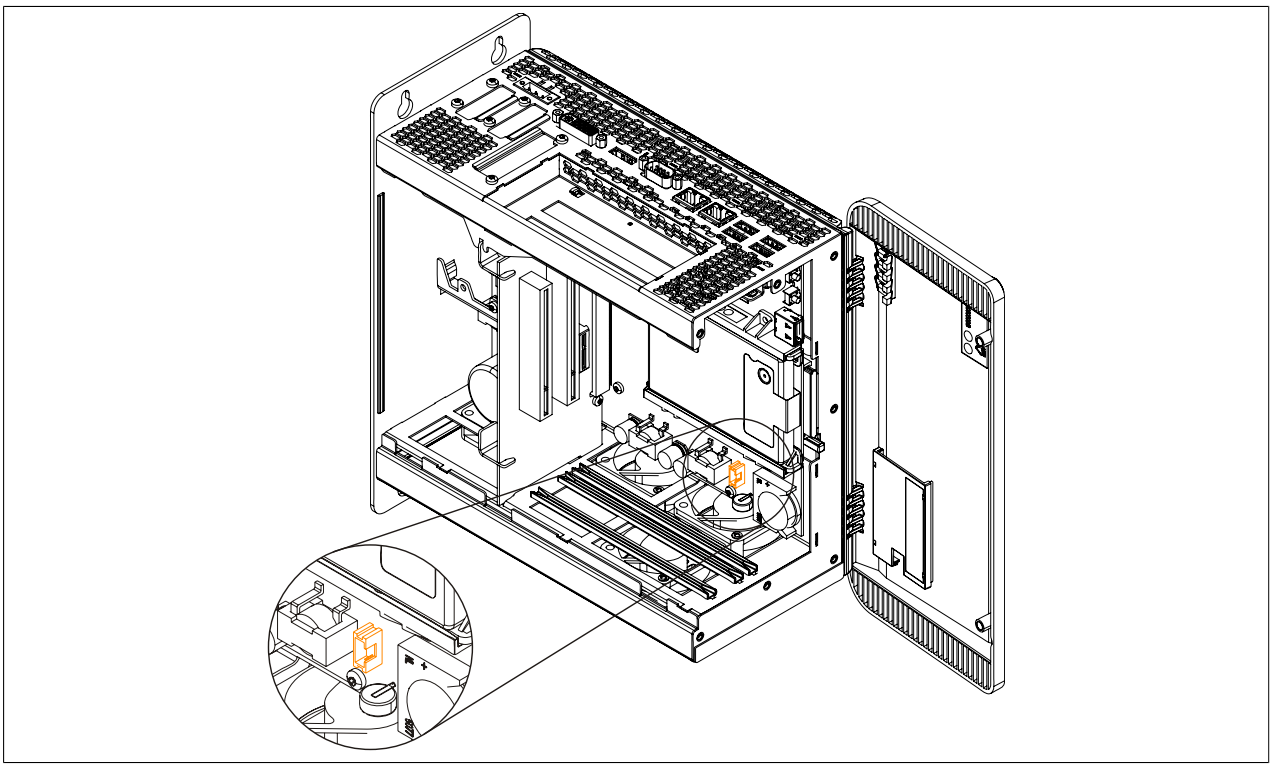

Figure 256: Connector location for external devices

7. Now connect the internal supply cable to the external device and replace any slide-in drives that were removed earlier.
8. Attach the side cover.

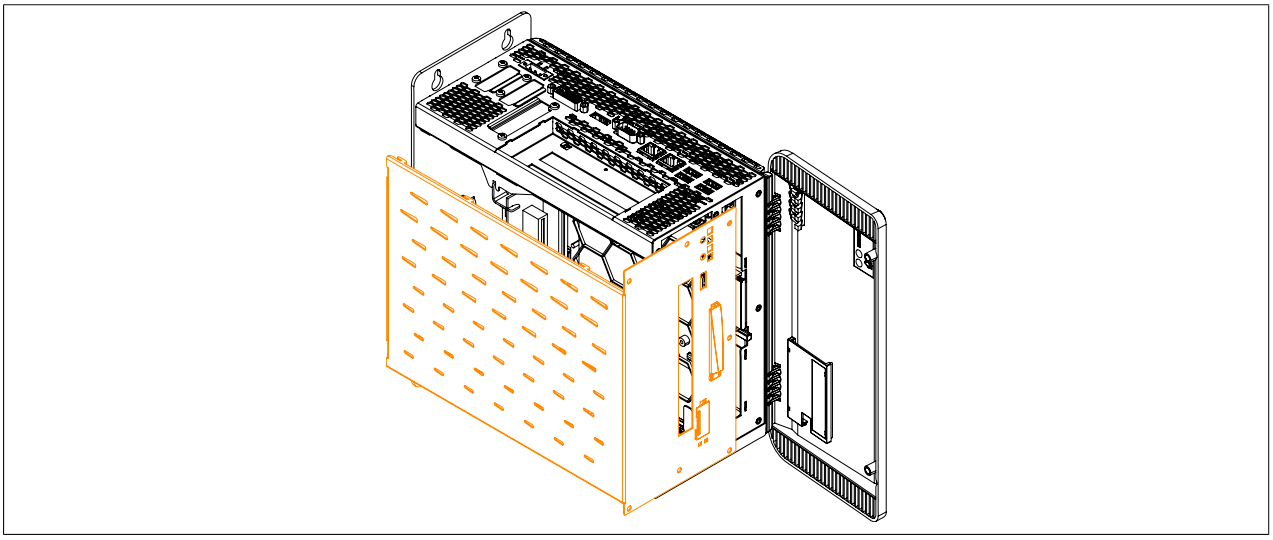

Figure 257: Replacing the side cover

9. Secure the side cover to the B&R Industrial PC using the same Torx screws (T10) as before.

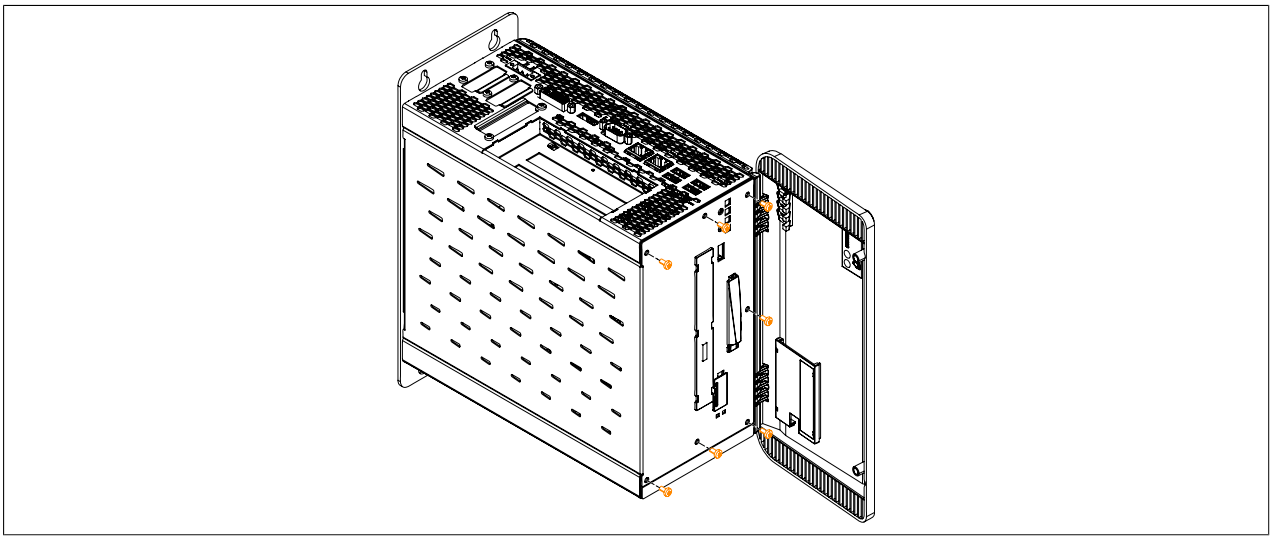

Figure 258: Securing the side cover

12 Replacing a PCI SATA RAID hard disk in a RAID 1 set

This example assumes that the secondary hard disk (HDD1) is defective in a RAID 1 configuration. In such a case, the defective hard disk can be replaced by the replacement drive SATA hard disk.

Model number of PCI SATA RAID controller	Model number of required replacement SATA HDD	Note
5ACPCI.RAIC-01	5ACPCI.RAIC-02	60 GB hard disk
5ACPCI.RAIC-03	5ACPCI.RAIC-04	160 GB hard disk
5ACPCI.RAIC-05	5MMHDD.0250-00	250 GB hard disk
5ACPCI.RAIC-06	5MMHDD.0500-00	500 GB hard disk

Table 322: Overview of required replacement SATA HDD for PCI SATA HDD RAID controller

A size 10 Torx screwdriver is needed to replace the hard disk.

12.1 Procedure

1. Disconnect the power supply.
2. Touch the housing or ground connection in order to discharge any electrostatic charge from your body.
3. Remove the side cover.
4. Remove the SATA RAID insert.
5. Loosen the 4 appropriate fastening screws (M3x5).

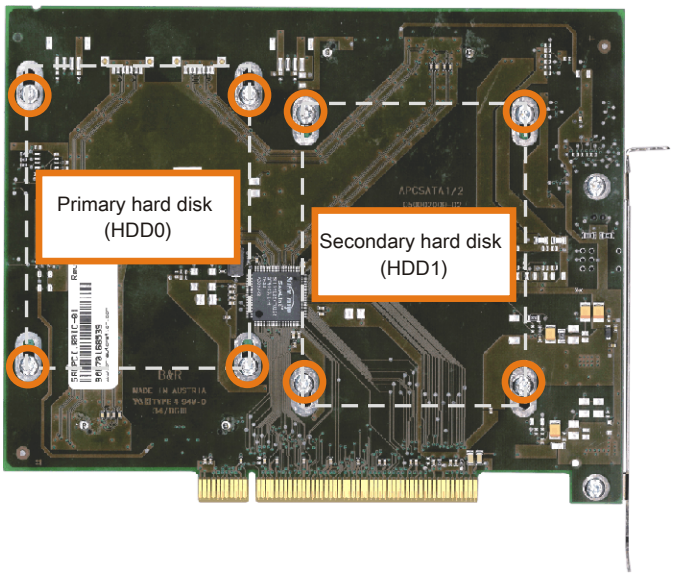

Figure 259: Screw layout on the back of the 5ACPCI.RAIC-03 SATA RAID controller

6. On the front, slide the hard disk down and away (Exchanging the hard disk - left image).
7. Insert the new hard disk carefully into the connector (Exchanging the hard disk - right image), being careful to only touch it on the front, not on the top.

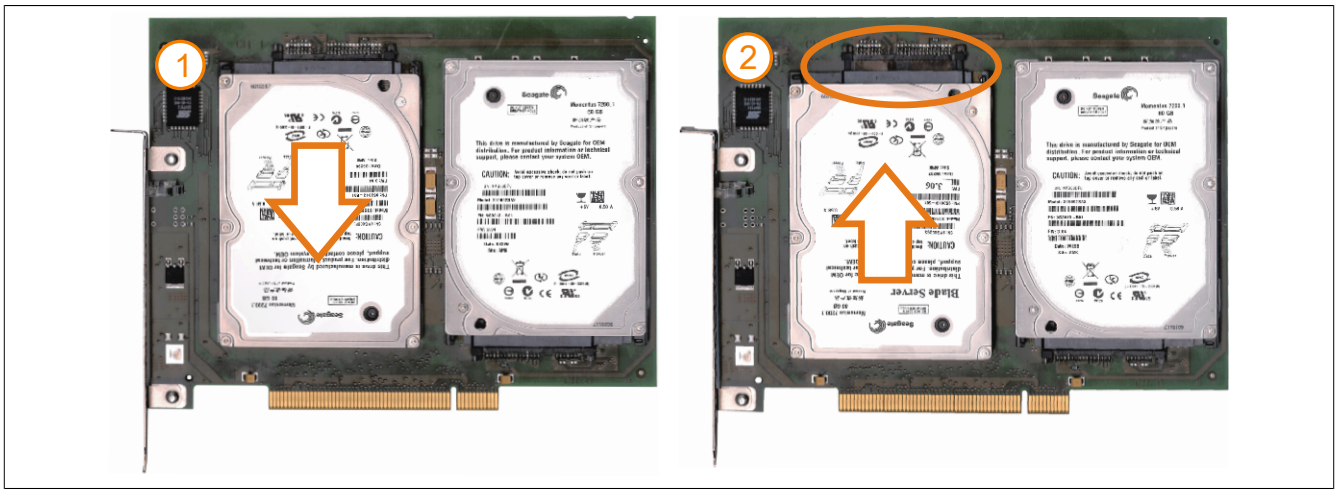

Figure 260: Exchanging the hard disk

8. Re-secure the hard disk using the 4 fastening screws (M3x5) used earlier.
9. Reassemble the device in the reverse order.
10. An error message is output by the RAID BIOS after starting the system: "RAID1 set is in Rebuild status. The rebuild will continue after boot sequence is complete".
11. A rebuild can be performed immediately in SATA RAID BIOS or once the PC has booted - see "Rebuild mirrored set" on page 205.

Appendix A

1 Maintenance Controller Extended (MTCX)

The MTCX controller (FPGA processor) is located on the mainboard (part of every system unit) of the APC910 device.

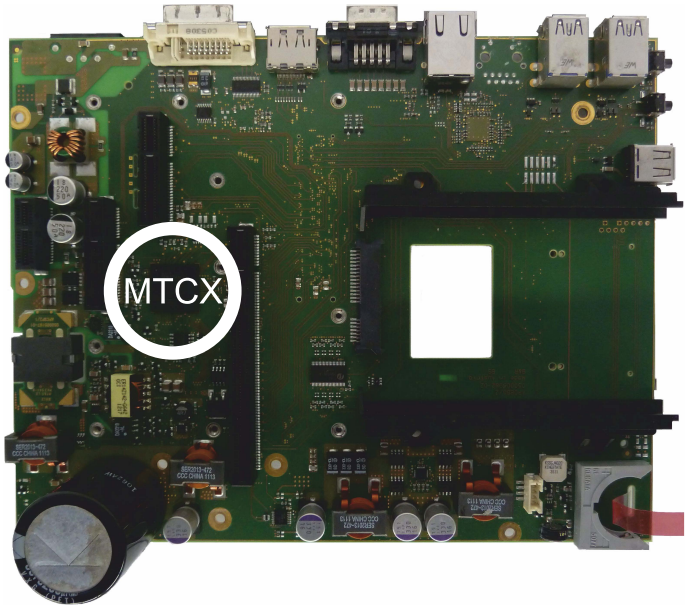

The MTCX is responsible for the following monitoring and control functions:

- Power on (power OK sequencing) and power failure logic
- Watchdog handling (NMI and reset handling)
- Temperature monitoring
- Fan control
- Key and LED handling/coordination (matrix keyboard on B&R display units)
- Advanced desktop operation (keys, USB forwarding)
- Daisy chain display operation (touch screen, USB forwarding)
- Panel locking mechanism (can be configured using B&R Control Center - ADI driver)
- Backlight control for connected B&R displays
- Statistical data recording (power cycles - records every switch-on, power on and fan hour; each quarter hour is counted)
- SDL data transfer (display, matrix keyboard, touch screen, service data, USB)
- LED status indicators (Power, HDD, Link, Run)
- Optimal default BIOS are reported to BIOS by the MTCX based on the actual hardware.

Extended MTCX functions are available by upgrading firmware [8]. The version can be read in BIOS or approved Microsoft Windows operating systems using the B&R Control Center.

[8] Available in the Downloads section of the B&R website (www.br-automation.com).

2 Abbreviations

Abbreviation	Stands for	Description
NC	Normally closed	Normally closed relay contact.
	Not connected	Used in pinout descriptions if a terminal or pin is not connected to a module.
ND	Not defined	In data tables, this stands for a value that has not been defined. This may be because a cable manufacturer does not provide certain technical data, for example.
NO	Normally open	Normally open relay contact.
TBD	To be defined	Used in technical data tables when certain information is not yet available. The value will be provided later.

Table 323: Abbreviations in this user's manual

3 Glossary

ACPI	*Advanced Configuration and Power Interface* is a configuration interface that enables the operating system to control the power supply for each device connected to the PC. With ACPI, the computer's BIOS is only responsible for the details of communication with the hardware.
Address	An address is a character string for identifying a memory location or a memory area, where data is stored and can be retrieved. It is also a symbol (e.g. with numerical controllers) for identifying a function unit for which subsequent geometrical or technological data are determined by the symbol.
Algorithm	DIN 19226: Algorithms are a finite series of well-defined regulations. The desired output quantities are created from permitted system input quantities. It describes how something is to be done. A procedure must at least satisfy the following requirements to be valid as an algorithm in a mathematical context. *Discrete* > An algorithm is made up of a finite series of steps. *Deterministic* > Under the same start conditions, an algorithm always creates the same end result. *Unambiguous* > The order of steps in an algorithm is clearly defined. *Finite* > An algorithm ends after a finite number of steps. From a quantity theory perspective, an algorithm is clearly defined by a set of sizes [input, intermediate and output sizes], a set of elementary operations and also by a regulation, which specifies when and in what sequence certain operations should be carried out. From a functional perspective, it transfers a set of input sizes into a set of output sizes. It can be represented in text form in a natural or artificial formal language or using graphic representations [graph, program flow chart, structured chart, Petri Nets etc.].
Analog signal	A signal, whose information parameters can accept any number of values, within specific technical limits. Theoretically, they can have an infinitely high resolution. However, in practice it is limited to a range of only 1 to 104. In addition, long-term storage and allocation causes many size problems. Therefore, digital signals are predominantly used in modern automation technology.
ANSI	The *American National Standards Institute* promotes and manages American industrial standards.
APC	*Automation PC*
Application software	Software, which is not used for operation by the computer itself, but rather when a computer is used to process a concrete application problem. It sets up the system software and uses this for fulfilling individual tasks. Application software can be accommodated in standard software used by a large number of customers in a wide range of industries. Common examples are Word, Excel, PowerPoint, Paint, Matlab etc. Industrial software tailored to the respective problems of a certain industry and individual software created for solving the particular problems of an individual user.
ASCII	*American Standard Code for Information Interchange* is a standard code is used worldwide (numbers, letters, special characters and device controller characters are represented as 7-bit binary combinations). Standard ASCII-characters cover 27 = 128 characters in total. An eighth bit is used as a so-called parity bit for error detection when transferring ASCII files. During even parity checking, this bit is set to 0, when the number of ‘1s’ in the remaining seven bits is an even number. Otherwise, it is set to 1. The expanded ASCII character set does not use parity checking. The highest value bit is used here to switch from the standard character set to the expansion. This allows space for special regional characters e.g. umlauts in the German language. www.asciitable.com
Automation	According to Brockhaus: The application of technical means, using specific programs that (either partially or totally) do not require human intervention to perform operations.
Automation Runtime	A uniform runtime system for all B&R automation components.
Availability	[A] The probability that a system will be functioning at a certain point in time. Reliability parameter for repairable systems. The stationary availability is defined using the following formula: A = 1/[1 + MDT/MTBF]. To achieve the highest possible availability values, it is necessary to perfect all quality assurance measures regarding reliability. However, this procedure has its technical and economical limits for given production conditions. When the automation plan is not sufficient to achieve the required reliability parameters, the principle of error tolerance, which is based on the shortest error detection and reconfiguration times, can allow the availability value to be increased.
B&R Automation Runtime	Windows-based program for creating installation disks to install B&R Automation Runtime™ on the target system.
Baud rate	Measurement unit for data transfer speed. It indicates the number of states for a transferred signal per second and is measured using the baud unit of measurement. 1 baud = 1 bit/s or 1 bps
BIOS	*Basic Input/Output System* is abbreviated as BIOS. Core software for computer systems with essential routines for controlling input and output processes on hardware components, for performing tests after system start and for loading the operating system. Although BIOS is used to configure a system's performance, the user does not usually come into contact with it.
Bit	A *binary digit* is the smallest discrete information unit. A bit can have the value 0 or 1.
Bit rate	The number of bits that can be transferred within a specified time unit. 1 bit/sec = 1 baud.
Browser	A software tool for searching and reading websites. The most famous browsers are Microsoft Internet Explorer and Netscape Navigator.
Byte	Data format [1 byte = 8 bits] and a unit for characterizing information amounts and memory capacity. The following units are the commonly used: KB, MB, GB.

Cache	*Background memory*, also known as non-addressable memory or fast buffer memory, is used to relieve the fast main memory of a computer. For example, data that should be output to slower components by the working memory (e.g. disk storage, printers) is stored temporarily in cache memory and output from there at an appropriate speed for the target devices.
CAN	*Controller Area Network* is a serial bus system. Structure according to ISO 11898; Bus medium: twisted pair. Good transfer properties in short distances less than 40 m with a 1 Mbit/sec data transfer rate. Maximum number of stations: Theoretically unlimited, but practically limited up to 64. Real-time capable (i.e. defined maximum latency times for messages with high priority). High reliability using error detection, error handling, troubleshooting. Hamming distance.
CE mark	It consists of the letters "CE" and indicates conformity to all EU guidelines for the labeled product. It indicates that the individual or corporate body who has performed or attached the label assures that the product conforms to all EU guidelines for complete harmonization. It also indicates that all mandatory conformity evaluation procedures have taken place.
Circuit breaker	Circuit breaker - Mechanical switching device that can switch on, allow timed operation and switch off currents under certain specified operating conditions; they can also switch on allow timed operation and switch off currents under defined exception conditions e.g. short circuit current. They are available in open and compact designs with manual, magnet, motor or pressurized air drives; in one, two, three or four pole designs; for AC, DC and three-phase current; for low voltage and high voltage applications.
CMOS	*Battery-powered memory area* where fundamental parameters of an IBM (or compatible) personal computer are stored. Information such as the type of hard drive, size of the working memory and the current date and time are required when booting the computer. As the name suggests, the memory is based on CMOS technology standards.
COM	A device name used to access serial ports in MS-DOS. The first serial port can be accessed under COM1, the second under COM2, etc. A modem, mouse, or serial printer is typically connected to a serial port.
COM1	Device name for the first serial port in a PC system. The input/output area for COM1 is usually found at address 03F8H. Generally, the COM1 port is assigned to IRQ 4. In many systems, an RS232 serial mouse is connected to COM1.
Control	Targeted interaction with values in a system that can be influenced. The system being influenced is known as the controlled system and in this case is a device, machine or system in which material and/or energy are subject to one or more possible handling forms, such as extracting, transferring, converting, saving or using as desired.
Controller	A device component which allows access to other devices on a computer subsystem. A disk controller, for example, allows access to hard disks and disk drives and is responsible both for physical and logic drive access.
CPU	A *Central Processing Unit* is the processing and control unit of a computer; the unit which interprets and executes commands. Also known as the central processor or microprocessor. A CPU has the capability to load commands, to decode and to execute, as well as to transfer information to and from other resources.
CRT	*Cathode Ray Tube* is abbreviated as CRT. The main component of a television set or a standard computer screen. A cathode ray tube consists of a vacuum tube that contains one or more electron guns. Each electron gun creates a horizontal electron beam that appears on the front of the tube (the screen). The inner surface of the screen is coated with phosphor, which is lit when hit by the electrons. Each of the electron beams move in a line from top to bottom. In order to prevent flickering, the screen content is updated at least 25 times per second. The sharpness of the picture is determined by the number of pixels on the screen.
CTS	*Clear To Send* is abbreviated as CTS. A signal used when transferring serial data from modem to computer, indicating its readiness to send the data. CTS is a hardware signal which is transferred via line number 5 in compliance with the RS-232-C standard.
DCD	*Data Carrier Detected*is a signal used in serial communication that is sent by the modem to the computer it is connected to, indicating that it is ready for transfer.
Device	In common usage, the word "device" is a synonym for an apparatus, instrument, piece of equipment, appliance, tool or utensil. This mostly refers to fixed or mobile equipment with relatively small spatial dimensions, with a specific function or special area of use that is generally designated using a preceding word such as in the phrases sporting device, medical device, kitchen device, hearing device, measuring device, control device, automation device, peripheral device etc. Furthermore, there are fixed and mobile large devices, such as those used in the military (tanks, aircraft, ships), medical (MRI scanners), geological (earth drilling equipment, and conveyor bridges) as well as those used in research (e.g. particle accelerator). From a technical standpoint (DIN 40150), devices are made up of components, units and modules. According to regulations regarding electromagnetic compatibility of devices, a device is considered any electrical or electronic apparatus, system, construction or network, which contains electrical or electronic parts. This device definition contradicts guidelines that are well-established and also documented in DIN standards [see above] and widely accepted by engineers, and therefore causes many misunderstandings when using the regulations regarding electromagnetic compatibility of devices.
DIMM	*Double In-line Memory Module* consists of one or more RAM chips on a small circuit board that is connected with the motherboard of a computer.
DMA	*Direct Memory Access* is accelerated direct access to a computer's RAM by bypassing the CPU.
DRAM	*Dynamic Random Access Memory* is a form of dynamic RAM consisting of an integrated semiconductor circuit that stores information based on the capacitor principle. Capacitors lose their charge in a relatively short time. Therefore, dynamic RAM circuit boards must contain a logic that allows continual recharging of RAM chips. Since the processor cannot access dynamic RAM while it is being recharged, one or more waiting states can occur when reading or writing data. Although it is slower, dynamic RAM is used more often than static RAM since the simple design of the circuits means that it can store four times more data than static RAM.
DSR	*Data Set Ready* is a signal used in serial data transfer, which is sent by the modem to the computer it is connected to, indicating its readiness for processing. DSR is a hardware signal which is sent via line number 6 in compliance with the RS-232-C standard.
DTR	*Data Terminal Ready* is a signal used in serial data transfer that is sent by the computer to the modem it is connected to, indicating the computer's readiness to accept incoming signals.
DVI	*Digital Visual Interface* is an interface for the digital transfer of video data.
DVI-D	Digital only
DVI-I	Integrated, i.e. analog and digital
EDID data	*Extended Display Identification Data* > EDID data contains the characteristics of monitors / TFT displays transferred as 128 kB data blocks to the graphics card via the Display Data Channel (DDC). This EDID data can be used to set the graphics card to the monitor properties.
Electromagnetic compatibility	*Electromagnetic compatibility* > In accordance with EMVG: The ability of a device or a system to function satisfactorily in its electromagnetic environment without introducing intolerable electromagnetic disturbances to anything in that environment [IEV 161-01-07])
EMC	*Electromagnetic Compatibility* represents the ability of a device or a system to function satisfactorily in its electromagnetic environment without introducing intolerable electromagnetic disturbances to anything in that environment [IEV 161-01-07].

EN	*European Norm* see CENELEC
Errors	*Fault* > in accordance with IEC 61508: Abnormal operation, which can reduce or prevent the capability of a functional unit to perform a required function.
ESD	*Electrostatic discharge* > Discharge of static electricity. ESD is a process for charge equalization between solid, liquid or gaseous media, which are electrically charged in a different way. It is usually accompanied by a surface, brush, spark discharge or also flashing discharge phenomenon. However, it can also take place via a contact point (excluding line-conducted), and only when the potential difference before the contact does not exceed 330 volts. Sparking can cause flammable gases and vapors or explosive compounds to ignite and through the discharge of currents and fields can damage or destroy electronic components or interfere with the functions of their electronic operating equipment. The first-named effect falls into the jurisdiction of Fire and Explosions Protection and Technical Safety. The second-named area is the responsibility of the protection of Electrostatic Discharge Sensitive components (ESDS) and Electromagnetic Compatibility (EMC). Possible human body discharge from handling switching circuits, circuit boards, control elements, and container surfaces in transport, installation, testing, operating, repairs and service are particularly important issues for people dealing with electronic device technology. The following electrical values should be calculated: Energy content 10 to 30 mJ, electrostatic voltage 0.1 to 20 kV, strength of discharge current up to 30 A (pulse amplitude, current change speed up to 100 A/ns, electrical field strength 1 to 4 kV/m, magnetic field strength up to 15 A/m within centimeters of the discharge).
Ethernet	*Baseband bus system* from RANK XEROX. Originally developed for linking minicomputers in the early 1970s. Ethernet is based on the CSMA/CD access procedure. Coaxial cables and/or twisted pair cables [twisted copper wire pairs] serve as transfer medium. Transfer speeds: 10 Mbps [Ethernet], 100 Mbps [Fast Ethernet] as well as 1 Gbps and 10 Gbps [Gigabit Ethernet], widely growing technology used for networking computers in a LAN, standardized since 1985 [IEEE 802.3 and ISO 8802-3]. Ethernet technology has established itself in office usage. After the enabling the possibility of extremely tough real-time demands and the adaptation of the device technology [bus cable, path fields, connection boxes] to the operating conditions of the industrial world, which are considerably tougher than those in the area of office use, Ethernet is further advancing into the area of automation technology.
Failure	*Failure in accordance with IEC 61508* indicates that a functional unit loses the ability to perform a required function. In regards to safety-oriented systems, a distinction is made between dangerous and safe failures. This depends on whether the status of the system failure is considered dangerous or safe. The cause of the failure may be load related or age-related, and therefore a random failure, or related to a flaw inherent in the system. In this case, it is known as a systematic failure.
FDD	*Floppy Disk Drive* > Reading device for removable magnetic memory from the early days of PC technology. Due to their sensitivity and moving components, FDDs have been almost completely replaced by CompactFlash memory in modern automation solutions.
Fieldbus	Bus system in the area close to the process, for directly connecting sensors and actuators with own intelligence. On a fieldbus, small amounts of data are transferred between sensors, actuators and control devices in digital form. Transfer must occur as fast as possible (i.e. near real-time). Furthermore, a fixed minimum and maximum response time must be guaranteed. Serial fieldbuses are replacing conventional wiring more and more in modern automation systems. Serial networking of the components saves time during planning and installation. Additionally, the size of control cabinets is reduced and failure and maintenance times are shortened, thereby achieving better system availability. System expansions, changes and updates are easy to implement.
FIFO	*First In First Out* > A queuing organization method whereby elements are removed in the same order as they were inserted. The first element inserted is also the first one removed. Such an organization method is typical for a list of documents that are waiting to be printed.
Filter	In terms of suppression, filters are components used for damping conducted disturbance. Proper application of filters requires that the spectral part of the reference and disturbance variables are different enough from one another. This allows selective damping of disturbance variables without noticeable interference of the reference variables when the filter parameters have been laid out sufficiently. Therefore, the actual damping effect is achieved mostly through voltage division and the resulting filter effect is described using insertion loss. Filters can be used on a source of disturbance to prevent the emission of conducted disturbance and on a noise reduction system to increase the immunity to conducted disturbance. In addition to the most commonly used passive filters, which are made up of passive components, there are also active filters, which contain components that require a power supply. Active filters are widely used as signal filters. They are only used in power supply networks in special cases.
Firewall	*Literal meaning: Wall that provides fire protection* > A term used for an electronic, hardware and/or software-based security system between two networks, (i.e. Intranet and Internet), which protects the computer or internal company network from unauthorized access from the Internet. Only data for specific, authorized services are allowed to pass through the security barrier at a strictly defined point.
Firmware	Firmware is software used to operate computer-controlled devices that generally stays in the device throughout its lifespan or over a long period of time. Such software includes operating systems for CPUs and application programs for industrial PCs as well as programmable logic controllers (e.g. the software in a washing machine controller). This software is written in read-only memory (ROM, PROM, EPROM) and cannot be easily replaced.
Floppy	*Diskette* > A round plastic disk with an iron oxide coating that can store a magnetic field. When the floppy disk is inserted in a disk drive, it rotates so that the different areas (or sectors) of the disk's surface are moved under the read/write head. This allows the magnetic orientation of the particle to be modified and recorded. Orientation in one direction represents binary 1, while the reverse orientation represents binary 0.
FTP	*File Transfer Protocol* > Rules for transferring data over a network from one computer to another computer. This protocol is based on TCP/IP, which has established itself as quasi standard for the transfer of data via Ethernet networks. FTP is one of the most used protocols on the Internet. It is defined in RFC 959 in the official regulations for Internet communication.
GB	*Gigabyte* > 1 GB = 1024 MB or 1,073,741,824 bytes
Ground	In the context of electro-technical theory, the term ‘ground’ is more or less understood as good conductive ground, which does not have any potential differences outside the area of influence or any other electrical phenomena.
HDD	*Hard Disk Drive* > Fixed magnetic mass memory with high capacities, e.g. 120 GB.

Host	*Host*> On computer systems with multiple CPUs and bus masters, this refers to the device with the arbitration unit and host CPU or the device that has control of the complete system. With regard to the Internet, a constantly available network server is called a host. *Hot Swap* > Changing computer components during operation. There are three different level: basic hot swap, full hot swap and the high availability model. Basic hot swap is the simplest form in which the module to be exchanged is deactivated or the computer configuration is changed using the computer keyboard. Computer specialists are normally needed. With full hot swap, software installed on the components being exchanged handles activation and deactivation. An integrated switch on the front of the component signals the computer that removing the component will start or that inserting the new component is complete. An LED on the front side shows that the component can be removed or that the new component has been inserted. The high availability model is used in computer systems with high availability requirements. Here, the hot swap software does not control each component individually, instead it uses a separate hot swap controller [HSC]. This allows faulty boards to be automatically deactivated and prevents crashes.
HTML	*Hyper Text Markup Language* Programming language with hyper text marks. Language used to write most web pages. It is based on the SGML definition. For detailed information, see www.w3.org/MarkUp
HTTP	*Hyper Text Transfer Protocol* > Data transfer protocol for HTML pages and all types of files coupled to them. It is the protocol that the entire WWW is based on. That means, it controls the interaction between web browser and web server. It becomes active with each mouse-click on a hyperlink and ensures that the browser is provided the respective information. www.w3c.org/Protocols
Hub	In this context, a hub is a central connection point in a network with star formed topology, which distributes incoming data packets to all connected end devices [similar to the way a multiple power socket distributes power].
IDE	*Integrated Device Electronics* > Interface for mass memory, such as HDDs, in which the controller electronics are found in the drive itself.
IEC	*International Electrotechnical Commission* > International standards organization that includes all national electro-technical committees. It specifies electro-technical standards worldwide; location: Geneva. www.iec.ch
Interface	From the hardware point of view, an interface is the connection point between two modules/devices/systems. The units on both sides of the interface are connected by the interface lines so that data, addresses, and control signals can be exchanged. The term interface includes all functional, electrical and constructive conditions [coding, signal level, pinout], which characterize the connection point between the modules, devices or systems. Depending on the type of data transfer, a differentiation is made between parallel [e.g. Centronics, IEEE 488] and serial interfaces [e.g. V.24, TTY, RS232, RS422, RS485], which are set up for different transfer speeds and transfer distances. From the point of view of software, the term interface describes the transfer point between program modules using specified rules for transferring the program data.
Internet	*International Network* > Worldwide collection of computers and computer networks of various sizes and architectures that work with various operating systems. Information is stored remote computers [servers] that can be accessed by anyone at any time from their computers [clients]. It has developed in steps in resent decades and now is the basis for the worldwide exchange of data, for example via e-mail. It is currently the most popular network in the world with approximately 500 million users. www.isoc.org
IP	*Internet Protocol* > Protocol [method, procedure] used to transfer data from one computer to another in a network, for example on the Internet or Intranet. Each computer in the network is clearly identified by its IP address. If data is sent from one computer to another, it is broken into small information packets containing the address of the sender and receiver. These packets can reach their destination over the network using different paths and in an order other than the send sequence. Once there, they are put back in the correct order by another protocol, the Transmission Control Protocol [TCP].
ISO	*International Organization for Standardization* > Worldwide federation of national standardization institutions from over 130 countries. ISO is not an acronym for the name of the organization; it is derived from the Greek word isos, meaning "equal". www.iso.ch
Jitter	Jitter is a term that describes time deviations of cyclic events. If, for example, an event should take place every 200 µs and it actually occurs every 198 to 203 µs, then the jitter is 5 µs. Jitter has many causes. It originates in the components and transfer media of networks because of noise, crosstalk, electromagnetic interference and many other random occurrences. In automation technology, jitter is a measure of the quality of synchronization and timing.
Latency time	Synonym for delay time, response time and runtime. For technical purposes, the time a device requires to provide an output reaction after an input arrives or, for example, the time a data packet requires to pass from the sender to the receiver on a network or remains in a network device before being forwarded.
LED	*Light Emitting Diode*> Illuminated diodes
Machine	According to machine regulations, a machine is understood to be an entire collection of interconnected components, with at least one being movable. Along with the mechanical components, the actuator, controller and energy components are also part of a machine. See also Automation Object.
MB	*Megabyte* > 1 MB = 220 or 1,048,576 bytes
Microprocessor	Highly integrated circuit with the functionality of a CPU, normally housed on a single chip. It comprises a control unit, arithmetic and logic unit, several registers and a link system for connecting memory and peripheral components. The main performance features are the internal and external data bus and address bus widths, the command set and the clock frequency. Additionally, a choice can be made between CISC and RISC processors. The first commercially available worldwide microprocessor was the Intel 4004. It came on the market in 1971.
Modem	*Modulator/demodulator* > Modulation/demodulation device, add-on card, or external device that allows information to be exchanged between computers over the telephone network using digital/analog or analog/digital signal conversion.
Motherboard	*Motherboard* > A circuit board that houses the main components of a computer such as the CPU switching circuit, co-processors, RAM, ROM for firmware, interface circuits, and expansion slots for hardware expansions.
MTBF	*Mean Time Between Failures* > The mean time between two failures for repairable objects and reliability parameters.
MTCX	*Maintenance Controller Extended* > The MTCX is an independent processor system that provides additional functions for a B&R Industrial PC that are not available with a normal PC. The MTC communicates with the B&R Industrial PC via the ISA bus (using a couple register).

NC	*Numerical Control* > Numerical Control
Nodes	Branching point in a network.
Nominal current	The nominal current is the RMS value for the phase current (current in the motor supply line) when generating the nominal torque at the nominal speed. This is possible for any length of time if the environmental conditions are correct.
Object	A material thing that can be seen and touched. A person or thing to which a specified action or feeling is directed. In the context of software, it is a self-contained unit that contains specific data [attributes] and functions [operations].
OEM	*Original Equipment Manufacturer* > A company that integrates third-party and in-house manufactured components into their own product range and then distributes these products under its own name.
PCI bus	*Peripheral Component Interconnect Bus* > Developed by Intel as an intermediary/local bus for the latest PC generations. It is basically a synchronous bus. The main clock of the CPU is used for synchronization. The PCI bus is microprocessor independent, compatible with 32-bit and 64-bit and supports both 3.3 V and 5 V cards and devices. See also PCI SIG.
PLC	*Programmable Logic Controller* > Computer-based control device that functions using an application program. The application program is relatively easy to create using standardized programming languages [IL, FBD, LAD, AS, ST]. Because of its serial functionality, response times are slower compared to connection-oriented control. Today, PLCs are available in device families with matched modular components for all levels of an automation hierarchy.
POH	*Power On Hours* > see MTBF.
POST	*Power-On Self Test* A set of routines that are stored in ROM on the computer and that test different system components, e.g. RAM, disk drive and the keyboard in order to determine that the connection is operating correctly and ready for operation. POST routines notify the user of problems that occur. This is done using several signal tones or by displaying a message that frequently accompanies a diagnosis value on the standard output or standard error devices (generally the monitor). If the POST runs successfully, control is transferred over to the system's bootstrap loader.
POWERLINK	see Ethernet POWERLINK www.ethernet-powerlink.org
Power Panel	Devices from this B&R product family combine visualization, control and I/O components in one compact device.
Process	Action, event or procedure in which continuous or discontinuous, quantitative or qualitative changes to parameters or states of a real or virtual object or media being observed take place. Every process has a defined start and a defined end. Depending on what happens during a process or which objects undergo the process, it is possible to differentiate between many types of economic and industrial processes such as value-added processes [production and manufacturing processes], service processes [logistics, maintenance and repair processes], management processes [planning and maneuvering processes], etc. For technological processes, a differentiation is often made between continuous processes, discontinuous processes and charge processes depending on the continuity of the main process activity.
Programming languages	Programming languages are artificial languages with strict syntax and semantics, clear symbols and special notation for creating algorithms in an executable computer program. Since the creation of the first functioning program-controlled computer Z3 in 1941, over a thousand programming languages have been developed for various application areas. An overview of the evolution, current state and future of programming languages can be found on the following websites.
Protocol	Colloquially: 1. Synonym for record or meeting minutes. 2. The original draft of a diplomatic document. In the area of Information technology (IT): Specifications regarding data formats and control procedures for communication between two devices or processes. The protocol can be implemented as hardware or software and mainly includes the following aspects: the type of error detection used, the data compression method (if used) and the way the sender indicates the end of the information sent and the receiver indicates that the information has been received.
RAM	*Random Access Memory* > Memory with random access. Semiconductor memory which can be read or written to by the microprocessor or other hardware components. Memory locations can be accessed in any order. The various ROM memory types do allow random access, but they cannot be written to. The term RAM refers to a more temporary memory that can be written to as well as read.
Reliability	In a technical context, reliability represents the ability to correctly operate at a continual performance level within defined probability limits and time spans. Characteristic reliability parameters are: A for availability, MTBF of repairable devices, MTTF for non-repairable systems and failure rate for modules or components, which can be used to establish the failure rate.
Robustness	*Robustness* > Ability of an object to continue functioning, even if specified conditions are not met. Qualitative term because exact assessment criteria do not exist.
ROM	*Read Only Memory* > Nonvolatile memory. Contents of the memory are stored by the chip manufacturer in final mask step [also called mask-programmed ROM]. It can only be read and constantly remains in the same form.
RS232	*Recommended Standard Number 232* > Oldest and most widespread interface standard, also called a V.24 interface. All signals are referenced to ground making this an imbalanced interface. High level: -3 to -30 V, low level: +3 to +30 V; Cable lengths up to 15 m, transfer rates up to 20 kbit/s. For point-to-point connections between 2 participants.
RS422	*Recommended Standard Number 422* > Interface standard, balanced operation, increased immunity to disturbances. High level: 2 to -6 V, low level: +2 to +6 V; 4-wire connections [inverted/not inverted], cable lengths up to 1200 m, transfer rates up to 10 Mbit/s, 1 sender can carry out simplex communication with up to 10 receivers.
RS485	*Recommended Standard Number 485* > Interface standard upgraded from RS422. High level: 1.5 to -6 V, low level: +1.5 to +6 V; two-wire connection [half-duplex mode] or four-wire connection [full-duplex mode]; permissible cable length up to 1200 m, transfer rates up to 10 Mbit/s. Up to 32 stations (sender/receiver) can be connected to an RS485 bus.
RTS	*Request To Send* > A signal used in serial data transfer for requesting send permission. For example, it is sent from a computer to the modem connected to it. The RTS signal is assigned to pin 4 according to the hardware specifications of the RS-232-C standard.
RXD	*Receive (RX) Data* > A line for transferring serial data received from one device to another, e.g. from a modem to a computer. For connections complying with the RS-232-C standard, the RXD is connected to pin 3 of the plug.

Safety	Brockhaus: The absence of danger or the knowledge that an individual or group is protected from potential dangers. When referring to technology, safety is the characteristic of an object [component, device, machine, system] to not present unacceptable dangers to people, equipment or the environment when operated according to specifications. Handling security issues takes place in two ways: Firstly, under the premise that the object will function as it should; secondly, under the premise that the object will not function correctly (complete failure). The first aspect mainly concerns issues of health, working conditions and fire and is regulated by many laws and guidelines. The second aspect is part of technical safety measures that are set up to minimize dangerous situations and risks associated with system failures (at least below an acceptable limiting risk level) based on the probability of a failure and the possible extent of damages. These issues are included in the topic of functional safety. For automation technology, the corresponding standards are IEC 61508 and EN 954-1. As a footnote, there is no such thing as absolute safety without any risks, neither in technology or nature.
SDRAM	*Synchronic Dynamic Random Access Memory* > A form of dynamic RAM semiconductor modules that can be operated at high clock rates.
Sensor	Equipment that converts a physical value based on a physical effect into an electrical, pneumatic or hydraulic signal for further processing. Modern sensors have integrated signal preprocessing to prevent disturbances or nonlinearity. In automation technology, sensors are used to get the information required to control a process. For example, determining aggregate and machine states or to collect process data such as temperature, pressure, speed, fill level, flow, distances, angles, etc.
Signal	Physical value that changes over time, e.g. a voltage or current with a parameter [amplitude, frequency, phase position] that provides concrete information about changes to another physical value. The respective parameter is called an information parameter. For example, an electric tachometer measures the rotational speed of a mechanical shaft, i.e. it is indicated by the amplitude of the tachometer output voltage. In this case, the amplitude of the output voltage is the information parameter providing information about the rotational speed of the machine shaft over time according to the signal definition. It is possible to differentiate between different basic signal types depending on the number of values, availability over time and the number of information parameters. Analog, binary and digital signals are most important for automation technology.
Slot PLC	PC insert card that has full PLC functionality. On the PC, it is coupled via a DPR with the Process using a fieldbus connection. It is programmed externally or using the host PC.
Software	SoftPLC; All programs including the respective documentation available for the operation of data processing systems, computer systems and computer-based devices of all types. Software is implemented on hardware as the non-physical functional elements of a computer system. Using the term software when referring to computer programs was initiated in 1958 by mathematician John Tukey, Princeton University. Software can be grouped as system software and application software.
SRAM	*Static Random Access Memory* > A high-speed RAM semiconductor type that is mostly used in computers for cache memory. Using a backup battery, the contents of this memory can also be retained during a power failure.
SVGA	*Super Video Graphics Array* > Graphics standard with a resolution of at least 800×600 pixels and at least 256 colors.
Switch	Device, similar to a hub, that takes data packets received in a network and, unlike a hub, does not pass them on to all network nodes, instead only to the respective addressee. Unlike a hub, a switch provides targeted communication within a network that only takes place between sender and receiver. Other network nodes are not involved.
SXGA	*Super Extended Graphics Array* > Graphics standard with a screen resolution of 1280 × 1024 pixels (aspect ratio 5:4).
Symbol	From the point of view of linguistics, a symbol is a "thing" [mark, indicator, etc.] that represents "something else" [in the real or virtual world]. A "symbol" has a defined relationship with the object being referenced, an "icon" has a visual similarity with the object being referenced and an "index" is a reference to a fact or conclusion. For technical terminology [i.e. DIN 44300], characters are symbols that represent certain information [letters, numbers, special characters, etc.].
Task	Program unit that is assigned a specific priority by the real-time operating system. It contains a complete process can consist of several modules.
Touch screen	Screen with touch sensors for selecting options in a displayed menu using the tip of the finger.
TXD	*Transmit (TX) Data* > A line for the transfer of serial data sent from one device to another, e.g. from a computer to a modem. For connections complying with the RS-232-C standard, the TXD is connected to pin 2 of the plug.
UART	*Universal Asynchronous Receiver/Transmitter* > Universal Asynchronous Receiver/Transmitter
UDMA	*Ultra Direct Memory Access* > A special IDE data transfer mode that allows high data transfer rates for drives. There have been many variations in recent times. UDMA33 mode transfers 33 megabytes per second. UDMA66 mode transfers 66 megabytes per second. UDMA100 mode transfers 100 megabytes per second.
UPS	*Uninterruptible Power Supply* > see UPS
USB	*Universal Serial Bus* > Cost-effective serial interface for PCs; IBM standard supported by Intel, Compaq and Microsoft and other well-known companies; up to 127 peripheral devices [mouse, keyboard, printer, scanner, digital cameras, modems, CDROM drives, telephones, etc.] can be connected to a single USB interface. The connected devices are also supplied with power via the 4-wire bus cable. The version on the market since 2001 (Version USB 2.0) allows data transfer rates up to 480 Mbps and is therefore also useful for transferring video data and for high-speed disk drives. www.usb.org
UXGA	*Ultra Extended Graphics Array* >Generally a screen resolution of 1600×1200 pixels (aspect ratio 4:3, 12:9).
VDE	*The Association for Electrical, Electronic & Information Technologies (Verband der Elektrotechnik Elektronik Informationstechnik e.V.)* www.vde.de
VGA	*Video Graphics Adapter*

Windows CE	Compact 32-bit operating system with multitasking and multithreading that Microsoft developed especially for the OEM market. It can be ported for various processor types and has a high degree of real-time capability. The development environment uses proven, well-established development tools. It is an open and scalable Windows operating system platform for many different devices. Examples of such devices are handheld PCs, digital wireless receivers, intelligent mobile phones, multimedia consoles, etc. In embedded systems, Windows CE is also an excellent choice for automation technology.
WUXGA	*Wide UXGA* > Generally 1920 × 1200 pixels (16:10)
XGA	*eXtended Graphics Array* >An expanded standard for graphics controllers and monitors that was introduced by IBM in 1990. This standard supports 640x480 resolution with 65,536 colors or 1024x768 resolution with 256 colors. This standard is generally used in workstation systems.
XML	*eXtensible Markup Language* > Extensible markup language . This new language was officially recommended in 1998 by the World Wide Web Consortium W3C as standard for web publishing and document management in client-server environments. Further development of the SGML standard. Unlike SGML documents, XML documents do not require a schema description in the form of a DTD file. XML is already supported completely in the newer versions of many ERP and MES systems. XML is accepted as an industrial standard thanks to its simple notation. Information is represented using the ASCII character set. This makes XML easy to read and transparent, and for the most part, portability of the text form is superior to binary structures. www.xml.com

A

B

C

D

E

F

G

H

I

K

L

M

O

P

Q

R

S

T

U

V

W