Panel PC 2100 swing arm devices (AP5000)

User's manual

Version: **2.10 (November 2021)**
Order no.: **MAPPC2100SW1-ENG**

Translation of the original documentation

Publishing information

B&R Industrial Automation GmbH

B&R Strasse 1

5142 Eggelsberg

Austria

Telephone: +43 7748 6586-0

Fax: +43 7748 6586-26

office@br-automation.com

1438564806948-2.2

1 Introduction

Information:

B&R makes every effort to keep documents as current as possible. The most current versions can be downloaded from the B&R website (www.br-automation.com).

1.1 Manual history

Version	Date	Comments[1)]
2.10	November 2021	• Added the following mounting units: ° "5ACCMA00.0100-000" on page 106 ° "5ACCMA00.0101-000" on page 108 • Documented heat pipe "5ACCHP00.0000-000" on page 277. • EN 60950 replaced by IEC 61010-2-201. • Updated section "Accessories" on page 272. • CFast cards, "Cables" and "USB mass storage device" are described in their own documentation starting with this version. • Updated the CAN interface description, see sections "Interface options" on page 112 and "Appendix A" on page 284.
2.00	November 2019	• Updated document. • Updated swivel-tilt flange "5ACCFL00.0100-000" on page 149. • Updated the following panels: ° "5AP5130.156C-000" on page 70 ° "5AP5130.185C-000" on page 74 ° "5AP5230.156C-000" on page 83 ° "5AP5230.185C-000" on page 89 • Updated the following expansion units: ° "5ACCKP03.xxxx-000" on page 157 ° "5ACCKP05.xxxx-000" on page 161 • Updated section "Environmental properties" on page 36. • Updated section "BIOS options" on page 205.
1.06	2017-10-31	• Updated the following sections: ° "Removing the VESA mounting unit" on page 181 ° "Installing the VESA mounting unit" on page 182 ° "Replacing colored lenses" on page 193 ° "ADI Development Kit" on page 259 ° "ADI .NET SDK" on page 260 ° "Repairs/Complaints and replacement parts" on page 267 • "Windows 10 IoT Enterprise 2016 LTSB" Updated. • Revised section "Installation and wiring". • Updated the following sections: ° "Multi-touch drivers" on page 236 ° "Touch screen calibration" on page 198

1) Editorial corrections are not listed.

1.2 Information about this document

This document is not intended for end customers! The safety guidelines required for end customers must be incorporated into the operating instructions for end customers in the respective national language by the machine manufacturer or system provider.

1.2.1 Organization of notices

Safety notices

Contain **only** information that warns of dangerous functions or situations.

Signal word	Description
Danger!	Failure to observe these safety guidelines and notices will result in death, severe injury or substantial damage to property.
Warning!	Failure to observe these safety guidelines and notices can result in death, severe injury or substantial damage to property.
Caution!	Failure to observe these safety guidelines and notices can result in minor injury or damage to property.
Notice!	Failure to observe these safety guidelines and notices can result in damage to property.

General notices

Contain **useful** information for users and instructions for avoiding malfunctions.

Signal word	Description
Information:	Useful information, application tips and instructions for avoiding malfunctions.

1.2.2 Guidelines

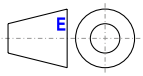

European dimension standards apply to all dimension diagrams.

All dimensions in millimeters.

Unless otherwise specified, the following general tolerances apply:

Nominal dimension range	General tolerance per DIN ISO 2768 medium
Up to 6 mm	±0.1 mm
Over 6 to 30 mm	±0.2 mm
Over 30 to 120 mm	±0.3 mm
Over 120 to 400 mm	±0.5 mm
Over 400 to 1000 mm	±0.8 mm

2 General safety guidelines

2.1 Intended use

In all cases, it is necessary to observe and comply with applicable national and international standards, regulations and safety measures!

The B&R products described in this manual are intended for use in industry and industrial applications.
The intended use includes control, operation, monitoring, drive and HMI tasks as part of automation processes in machines and systems.

B&R products are only permitted to be used in their original condition. Modifications and extensions are only permitted if they are described in this manual.

B&R excludes liability for damage of any kind resulting from the use of B&R products in any intended way.

B&R products have not been designed, developed and manufactured for use that involves fatal risks or hazards that could result in death, injury, serious physical harm or other loss without the assurance of exceptionally stringent safety precautions.

B&R products are explicitly not intended for use in the following applications:

- Monitoring and control of thermonuclear processes
- Weapon systems control
- Flight and traffic control systems for passenger and freight transport
- Health monitoring and life support systems

2.2 Protection against electrostatic discharge

Electrical assemblies that can be damaged by electrostatic discharge (ESD) must be handled accordingly.

2.2.1 Packaging

- **Electrical assemblies with housing:**
  Do not require special ESD packaging but must be handled properly (see "Electrical assemblies with housing").
- **Electrical assemblies without housing:**
  Are protected by ESD-suitable packaging.

2.2.2 Regulations for proper ESD handling

Electrical assemblies with housing

- Do not touch the connector contacts of connected cables.
- Do not touch the contact tips on circuit boards.

Electrical assemblies without housing

The following applies in addition to "Electrical assemblies with housing":

- All persons handling electrical assemblies and devices in which electrical assemblies are installed must be grounded.
- Assemblies are only permitted to be touched on the narrow sides or front plate.
- Always place assemblies on suitable surfaces (ESD packaging, conductive foam, etc.). Metallic surfaces are not suitable surfaces!
- Assemblies must not be subjected to electrostatic discharges (e.g. due to charged plastics).

- A minimum distance of 10 cm from monitors or television sets must be maintained.
- Measuring instruments and devices must be grounded.
- Test probes of floating potential measuring instruments must be discharged briefly on suitable grounded surfaces before measurement.

Individual components

- ESD protective measures for individual components are implemented throughout B&R (conductive floors, shoes, wrist straps, etc.).
- The increased ESD protective measures for individual components are not required for handling B&R products at customer locations.

2.3 Regulations and measures

Electronic devices are generally not failsafe. If the programmable logic controller, operating or control device or uninterruptible power supply fails, the user is responsible for ensuring that connected devices (such as motors) are brought to a safe state.

When using programmable logic controllers as well as when using operating and monitoring devices as control systems in conjunction with a Soft PLC (e.g. B&R Automation Runtime or similar product) or Slot PLC (e.g. B&R LS251 or similar product), the safety measures that apply to industrial controllers (protection by protective equipment such as emergency stops) must be observed in accordance with applicable national and international regulations. This also applies to all other connected devices, such as drives.

All work such as installation, commissioning and servicing are only permitted to be carried out by qualified personnel. Qualified personnel are persons who are familiar with the transport, installation, assembly, commissioning and operation of the product and have the appropriate qualifications for their job (e.g. IEC 60364). National accident prevention regulations must be observed.
The safety guidelines, information about connection conditions (nameplate and documentation) and limit values specified in the technical data must be read carefully before installation and commissioning and must be strictly observed.

2.4 Transport and storage

During transport and storage, devices must be protected against undue stress (mechanical stress, temperature, humidity, aggressive atmosphere).

2.5 Installation

- The devices are not ready for use and must be installed and wired according to the requirements of this documentation in order to comply with EMC limit values.
- Installation must be carried out according to the documentation using suitable equipment and tools.
- Devices are only permitted to be installed in a voltage-free state and by qualified personnel. The control cabinet must first be disconnected from the power supply and secured against being switched on again.
- General safety regulations and national accident prevention regulations must be observed.
- The electrical installation must be carried out in accordance with relevant regulations (e.g. line cross section, fuse protection, protective ground connection).

2.6 Operation

2.6.1 Protection against contact with electrical parts

In order to operate programmable logic controllers, operating and monitoring devices and uninterruptible power supplies, it is necessary for certain components to carry dangerous voltages over 42 VDC. Touching one of these components can result in a life-threatening electric shock. There is a risk of death, serious injury or damage to property.

Before switching on programmable logic controllers, operating and monitoring devices and uninterruptible power supplies, it must be ensured that the housing is properly connected to ground potential (PE rail). Ground connections must also be made if the operating and monitoring device and uninterruptible power supply are only connected for testing purposes or only operated for a short time!

Before switching on, live parts must be securely covered. All covers must be kept closed during operation.

2.6.2 Ambient conditions - Dust, moisture, aggressive gases

The use of operating and monitoring devices (e.g. industrial PCs, Power Panels, Mobile Panels) and uninterruptible power supplies in dusty environments must be avoided. This can otherwise result in dust deposits that affect the functionality of the device, especially in systems with active cooling (fans), which may no longer ensure sufficient cooling.

The presence of aggressive gases in the environment can also result in malfunctions. In combination with high temperature and relative humidity, aggressive gases – for example with sulfur, nitrogen and chlorine components – trigger chemical processes that can very quickly impair or damage electronic components. Blackened copper surfaces and cable ends in existing installations are indicators of aggressive gases.

When operated in rooms with dust and condensation that can endanger functionality, operating and monitoring devices such as Automation Panels or Power Panels are protected on the front against the ingress of dust and moisture when installed correctly (e.g. cutout installation). The back of all devices must be protected against the ingress of dust and moisture, however, or the dust deposits must be removed at suitable intervals.

2.6.3 Programs, viruses and malicious programs

Any data exchange or installation of software using data storage media (e.g. floppy disk, CD-ROM, USB flash drive) or via networks or the Internet poses a potential threat to the system. It is the direct responsibility of the user to avert these dangers and to take appropriate measures such as virus protection programs and firewalls to protect against them and to use only software from trustworthy sources.

2.7 Cybersecurity disclaimer for products

B&R products communicate via a network interface and were developed for secure connection with internal and, if necessary, other networks such as the Internet.

> **Information:**
>
> **In the following, B&R products are referred to as "product" and all types of networks (e.g. internal networks and the Internet) are referred to as "network".**

It is the sole responsibility of the customer to establish and continuously ensure a secure connection between the product and the network. In addition, appropriate security measures must be implemented and maintained to protect the product and entire network from any security breaches, unauthorized access, interference, digital intrusion, data leakage and/or theft of data or information.

B&R Industrial Automation GmbH and its subsidiaries are not liable for damages and/or losses in connection with security breaches, unauthorized access, interference, digital intrusion, data leakage and/or theft of data or information.

The aforementioned appropriate security measures include, for example:

- Segmentation of the network (e.g. separation of the IT network from the control network[1])
- Use of firewalls
- Use of authentication mechanisms
- Encryption of data
- Use of anti-malware software

Before B&R releases products or updates, they are subjected to appropriate functional testing. Independently of this, we recommend that our customers develop their own test processes in order to be able to check the effects of changes in advance. Such changes include, for example:

- Installation of product updates
- Significant system modifications such as configuration changes
- Deployment of updates or patches for third-party software (non-B&R software)
- Hardware replacement

These tests should ensure that implemented security measures remain effective and that systems in the customer's environment behave as expected.

[1] The term "control network" refers to computer networks used to connect control systems. The control network can be divided into zones, and there can be several separate control networks within a company or site. The term "control systems" refers to all types of B&R products such as controllers (e.g. X20), HMI systems (e.g. Power Panel T30), process control systems (e.g. APROL) and supporting systems such as engineering workstations with Automation Studio.

3 System overview

3.1 Information about this user's manual

This user's manual contains all relevant information about an operational Panel PC 2100 swing arm device with AP5000 panels.

This user's manual applies to the 2nd product generation of modular Panel PC 2100 swing arm devices. For information about the Automation Panel 5000 swing arm device, see the Automation Panel 5000 user's manual.

> **Information:**
>
> **All specifications in dimension diagrams and associated tables are in millimeters [mm].**

3.2 Easy customization

The Automation Panel 5000 can be used as a remote panel or part of a Panel PC. For this, the panel is either equipped with a receiver for Smart Display Link (SDL), SDL3 or SDL4, or a PC unit is attached. The operator panel is always identical.

3.3 Description of individual modules

3.3.1 System units

System units consist of the CPU board and an aluminum housing. All interfaces and the main memory modules of the PPC2100 swing arm are integrated on the system units. An interface option and CFast card can also be connected. The main memory modules are permanently installed on the system unit and cannot be replaced.

If a system unit is installed on a panel, this results in a functional Panel PC. The Panel PC 2100 is installed on a swing arm system using the installed mounting unit and attached flange.

A system unit without a panel is not functional.

3.3.1.1 Features

- Intel Atom processors
- Intel Bay Trail platform
- Intel HD Graphics
- DDR3 memory
- 2x Gigabit Ethernet
- 1x USB 3.0, 1x USB 2.0
- 1x CFast slot
- 1x interface option slot
- Fanless operation

3.3.2 AP5000 panels

The AP5000 series forms the basis for the Automation Panel 5000 and two Panel PC variants: Panel PC 2100 or Panel PC 2200 swing arm device with Automation Panel 5000. They consist of a display and touch screen. Different display sizes, touch screen technologies, mounting systems and panels with operating elements are available. The panels can only be operated as a complete system in combination with a link module (Automation Panel 5000) or system unit (PPC2100 or PPC2200 swing arm device with a panel from the Automation Panel 5000 series).
Single-touch panels start with order number 5AP5120.xxxx-xxx, multi-touch panels start with 5AP5130.xxxx-xxx and multi-touch panels with an expansion option start with order number 5AP5230.xxxx-xxx.

3.3.3 Mounting units

Mounting units are installed on the back of the panel. They are used to protect the installed link module or system unit and thus provide the complete system with a different degree of protection depending on the variant.

A flange is installed on 5ACCMA00.000x-000 swing arm mounting units. Due to the symmetrical design of the back of the panel, it is possible to install the mounting unit in 2 directions. If a flange is selected as the mounting system, a flange output is possible on the top or bottom. This mounting unit provides IP65 protection.

A VESA bracket is installed on VESA IP54 mounting units (5ACCMA00.010x-000). If a VESA bracket is selected as the mounting system, VESA 100 or VESA 75 installation is possible. These mounting units provide IP54 protection.

A VESA bracket is installed on VESA mounting unit 5ACCMA01.0100-000. If a VESA bracket is selected as the mounting system, VESA 100 or VESA 75 installation is possible. This mounting unit provides a degree of protection up to IP20.

3.3.4 Flanges

A flange is installed on the mounting unit and establishes the connection between the Automation Panel or Panel PC and the swing arm system.

3.3.5 Expansion units

Expansion units can be installed on AP5230 panels with expansion option. It is possible to choose between an expansion cover and an expansion unit.
Expansion covers have cutouts that can be used to install the desired operating elements at a later time.
The operating elements are already integrated in expansion units.

3.3.6 Handles

Handles can be installed on the sides of the panel to enable comfortable, ergonomic operation.

3.4 Configuration

The following individual components are mandatory for operation:

- Panels
- System unit
- Operating system
- Mounting unit: Swing arm or VESA
- Flange (swing arm mounting unit only)
- Expansion unit or expansion cover (5AP5230.xxxx-000 only)

Configuration

Panels — Select 1.



	Diagonal	Resolution	Touch screen	Keys	Format
5120 panels					
5AP5120.1505-000	15.0"	XGA	Single-touch	No	Landscape
5AP5120.1906-000	19.0"	SXGA	Single-touch	No	Landscape
5130 panels					
5AP5130.156B-000	15.6"	HD	Multi-touch	No	Landscape
5AP5130.156C-000	15.6"	FHD	Multi-touch	No	Landscape
5AP5130.185B-000	18.5"	HD	Multi-touch	No	Landscape
5AP5130.185C-000	18.5"	FHD	Multi-touch	No	Landscape
5AP5130.215C-000	21.5"	FHD	Multi-touch	No	Landscape
5AP5130.240C-000	24.0"	FHD	Multi-touch	No	Landscape
5230 panels					
5AP5230.156B-000	15.6"	HD	Multi-touch	No	Landscape
5AP5230.156C-000	15.6"	FHD	Multi-touch	No	Landscape
5AP5230.185B-000	18.5"	HD	Multi-touch	No	Landscape
5AP5230.185C-000	18.5"	FHD	Multi-touch	No	Landscape
5AP5230.215C-000	21.5"	FHD	Multi-touch	No	Landscape
5AP5230.215I-000	21.5"	FHD	Multi-touch	No	Portrait
5AP5230.240C-000	24.0"	FHD	Multi-touch	No	Landscape

System units — Select 1

System unit	Processor	Processor - Clock frequency	Cores	Main memory type	Main memory size
5PPC2100.BY01-000	Intel Atom E3815	1460 MHz	1	DDR3 SDRAM	1 GB
5PPC2100.BY11-000	Intel Atom E3825	1330 MHz	2	DDR3 SDRAM	1 GB
5PPC2100.BY22-000	Intel Atom E3826	1460 MHz	2	DDR3 SDRAM	2 GB
5PPC2100.BY34-000	Intel Atom E3827	1750 MHz	2	DDR3 SDRAM	4 GB
5PPC2100.BY44-000	Intel Atom E3845	1910 MHz	4	DDR3 SDRAM	4 GB
5PPC2100.BY48-000	Intel Atom E3845	1910 MHz	4	DDR3 SDRAM	8 GB

Mounting units — Select 1

IP65 mounting unit	VESA mounting unit
5ACCMA00.0000-000 (without USB)	5ACCMA00.0100-000 (IP54, without USB)
5ACCMA00.0001-000 (1x USB)	5ACCMA00.0101-000 (IP54, 1x USB)
5ACCMA00.0002-000 (2x USB)	5ACCMA01.0100-000 (IP20/IP10)

Flanges[1] — Select 1

Rotary flange	Swivel-tilt flange	Rittal flange adapter
5ACCFL00.0000-000	5ACCFL00.0100-000	5ACCFL00.0200-000

Expansion units[2] — Optional, select 1

Covers

5ACCKP00.156B-000	5ACCKP00.185B-000
5ACCKP00.215C-000	5ACCKP00.215I-000
5ACCKP00.240C-000	

Units

5ACCKP01.156B-000	5ACCKP01.185B-000	5ACCKP04.156B-000	5ACCKP04.185B-000
5ACCKP01.215C-000	5ACCKP01.215I-000	5ACCKP04.215C-000	5ACCKP04.215I-000
5ACCKP01.240C-000		5ACCKP04.240C-000	

Units (with RFID)

5ACCKP03.185B-000	5ACCKP05.185B-000
5ACCKP03.215C-000	5ACCKP05.215C-000
5ACCKP03.240C-000	5ACCKP05.240C-000

Handles[3] — Optional, select 1

5ACCHD00.1505-000	5ACCHD00.156B-000	5ACCHD01.156B-000	5ACCHD01.185B-000
5ACCHD00.185B-000	5ACCHD00.1906-000	5ACCHD01.215C-000	5ACCHD01.215I-000
5ACCHD00.215C-000	5ACCHD00.240C-000	5ACCHD01.240C-000	

Heat pipes — Selected automatically[4]

5ACCHP00.0001-000
5ACCHP00.0004-000

Mass storage devices		
	**CFast cards**	Select 1.
	5CFAST.2048-00 ≥ E0 5CFAST.4096-00 ≥ E0 5CFAST.8192-00 ≥ E0 5CFAST.016G-00 ≥ E0 5CFAST.032G-00 ≥ E0	5CFAST.032G-10 5CFAST.064G-10 5CFAST.128G-10 5CFAST.256G-10
Interfaces		
	**Interface options**	Optional, select 1
	5ACCIF01.FPCC-000 5ACCIF01.FPLK-000 5ACCIF01.FFS0-000 5ACCIF01.FPLS-000 5ACCIF01.FPLS-001	5ACCIF01.FPSC-000 5ACCIF01.FPSC-001 5ACCIF01.ICAN-000 5ACCIF01.FPCS-000
USB accessories		Optional selection
	5MMUSB.2048-01 5MMUSB.4096-01 5MMUSB.032G-02	
USB hub		Optional selection
	5ACCUSB2.0002-000	
Terminal blocks		Select 1.
	**Power supply connectors** 0TB103.9 0TB103.91	**Terminal block for IF option** 0TB1210.3100
Operating systems		Select 1.
	Windows 7 5SWWI7.1100-ENG 5SWWI7.1100-GER 5SWWI7.1300-MUL 5SWWI7.1200-ENG 5SWWI7.1200-GER 5SWWI7.1200-MUL **Windows Embedded Standard 7** 5SWWI7.1543-ENG 5SWWI7.1643-ENG 5SWWI7.1743-MUL 5SWWI7.1843-MUL	**Windows Embedded 8.1 Industry** 5SWWI8.0343-MUL 5SWWI8.0443-MUL **Windows 10** 5SWW10.0243-MUL 5SWW10.0543-MUL **B&R Linux 8** 5SWLIN.0543-MUL 5SWLIN.0643-MUL	**Automation Runtime** 0TG1000.01 0TG1000.02 1TG4600.10-5 1TG4601.06-5 1TG4601.06-T **B&R Linux 9** 5SWLIN.0743-MUL

1) Must be selected for all mounting units except VESA.
2) Expansion units can only be combined with 5AP5230.xxxx-000 panels.
3) Handles must be installed on site.
4) If a configuration is created with one of the following mounting units:

- Swing arm (5ACCMA00.000x-000): Heat pipe 5ACCHP00.0001-000 is automatically selected.
- VESA IP54 (5ACCMA00.010x-000): Heat pipe 5ACCHP00.0004-000 is automatically selected.

3.5 Overview

Order number	Short description	Page
	Accessories	
0TB103.9	Connector 24 VDC - 3-pin, female - Screw clamp terminal block 3.31 mm²	274
0TB103.91	Connector 24 VDC - 3-pin, female - Cage clamp terminal block 3.31 mm²	274
5ACCUSB2.0002-000	2-port USB hub, passive - For Automation Panel 5000	279
5SWUTI.0001-000	HMI Service Center USB flash drive - Hardware diagnostic software - For APC910/PPC900 - For PPC1200 - For APC2100/PPC2100 - For APC2200/PPC2200 - For APC3100/PPC3100 - For APC mobile - For AP800/AP900 - For AP9x3/AP9xD - For AP1000/AP5000	263
	B&R Linux 8	
5SWLIN.0543-MUL	B&R Linux 8 - 32-bit - Multilingual - PPC2100 chipset Bay Trail - Installation (without Recovery DVD) - Only available with a new device	254
5SWLIN.0643-MUL	B&R Linux 8 - 64-bit - Multilingual - PPC2100 chipset Bay Trail - Installation (without Recovery DVD) - Only available with a new device	254
	B&R Linux 9	
5SWLIN.0743-MUL	B&R Linux 9 - 64-bit - Multilingual - PPC2100 chipset Bay Trail - Installation (without Recovery DVD) - Only available with a new device	256
	Expansion units	
5ACCKP00.156B-000	AP5000 swing arm expansion option - Expansion cover - For switching elements - 10x cutouts for 22.3 mm switching elements - For panel 5AP5230.156B/156C-000	153
5ACCKP00.185B-000	AP5000 swing arm expansion option - Expansion cover - For switching elements - 11x cutouts for 22.3 mm switching elements - For panel 5AP5230.185B/185C-000	153
5ACCKP00.215C-000	AP5000 swing arm expansion option - Expansion cover - For switching elements - 13x cutouts for 22.3 mm switching elements - For panel 5AP5230.215C-000	153
5ACCKP00.215I-000	AP5000 swing arm expansion option - Expansion cover - For switching elements - 7x cutouts for 22.3 mm switching elements - For panel 5AP5230.215I-000	153
5ACCKP00.240C-000	AP5000 swing arm expansion option - Expansion cover - For switching elements - 14x cutouts for 22.3 mm switching elements - For panel 5AP5230.240C-000	153
5ACCKP01.156B-000	AP5000 swing arm expansion option - Expansion unit - 1x emergency stop - 2x pushbutton (red and green) - 1x selector switch - 1x key switch - 1x front USB interface - For panel 5AP5230.156B/156C-000	155
5ACCKP01.185B-000	AP5000 swing arm expansion option - Expansion unit - 1x emergency stop - 2x pushbutton (red and green) - 1x selector switch - 1x key switch - 1x front USB interface - For panel 5AP5230.185B/185C-000	155
5ACCKP01.215C-000	AP5000 swing arm expansion option - Expansion unit - 1x emergency stop - 2x pushbutton (red and green) - 1x selector switch - 1x key switch - 1x front USB interface - For panel 5AP5230.215C-000	155
5ACCKP01.215I-000	AP5000 swing arm expansion option - Expansion unit - 1x emergency stop - 2x pushbutton (red and green) - 1x selector switch - 1x key switch - 1x front USB interface - For panel 5AP5230.215I-000	155
5ACCKP01.240C-000	AP5000 swing arm expansion option - Expansion unit - 1x emergency stop - 2x pushbutton (red and green) - 1x selector switch - 1x key switch - 1x front USB interface - For panel 5AP5230.240C-000	155
5ACCKP03.185B-000	AP5000 swing arm expansion option - Expansion unit - 1x RFID read/write unit - 1x emergency stop - 2x pushbutton (red and green) - 1x selector switch - 1x key switch - 1x front USB interface - For panel 5AP5230.185B/185C-000	157
5ACCKP03.215C-000	AP5000 swing arm expansion option - Expansion unit - 1x RFID read/write unit - 1x emergency stop - 2x pushbutton (red and green) - 1x selector switch - 1x key switch - 1x front USB interface - For panel 5AP5230.215C-000	157
5ACCKP03.240C-000	AP5000 swing arm expansion option - Expansion unit - 1x RFID read/write unit - 1x emergency stop - 2x pushbutton (red and green) - 1x selector switch - 1x key switch - 1x front USB interface - For panel 5AP5230.240C-000	157
5ACCKP04.156B-000	AP5000 swing arm expansion option - Expansion unit - 1x emergency stop - 3x pushbutton (red, green, blue) - 1x key switch - 1x front USB interface - For panel 5AP5230.156B/156C-000	159
5ACCKP04.185B-000	AP5000 swing arm expansion option - Expansion unit - 1x emergency stop - 3x pushbutton (red, green, blue) - 1x key switch - 1x front USB interface - For panel 5AP5230.185B/185C-000	159
5ACCKP04.215C-000	AP5000 swing arm expansion option - Expansion unit - 1x emergency stop - 3x pushbutton (red, green, blue) - 1x key switch - 1x front USB interface - For panel 5AP5230.215C-000	159
5ACCKP04.215I-000	AP5000 swing arm expansion option - Expansion unit - 1x emergency stop - 3x pushbutton (red, green, blue) - 1x key switch - 1x front USB interface - For panel 5AP5230.215I-000	159
5ACCKP04.240C-000	AP5000 swing arm expansion option - Expansion unit - 1x emergency stop - 3x pushbutton (red, green, blue) - 1x key switch - 1x front USB interface - For panel 5AP5230.240C-000	159
5ACCKP05.185B-000	AP5000 swing arm expansion option - Expansion unit - 1x RFID read/write unit - 1x emergency stop - 3x pushbutton (red, green, blue) - 1x key switch - 1x front USB interface - For panel 5AP5230.185B/185C-000	161
5ACCKP05.215C-000	AP5000 swing arm expansion option - Expansion unit - 1x RFID read/write unit - 1x emergency stop - 3x pushbutton (red, green, blue) - 1x key switch - 1x front USB interface - For panel 5AP5230.215C-000	161
5ACCKP05.240C-000	AP5000 swing arm expansion option - Expansion unit - 1x RFID read/write unit - 1x emergency stop - 3x pushbutton (red, green, blue) - 1x key switch - 1x front USB interface - For panel 5AP5230.240C-000	161
	Flanges	
5ACCFL00.0000-000	AP5000 flange - Swing arm rotary flange - For swing arm mounting unit	147
5ACCFL00.0100-000	AP5000 flange - Swivel-tilt flange for swing arm - For swing arm mounting unit	149
5ACCFL00.0200-000	AP5000 flange - Swing arm flange adapter - For Rittal - For swing arm mounting unit	151
	Handles	
5ACCHD00.1505-000	AP5000 swing arm handles - For panel 5AP5120.1505-000	164
5ACCHD00.156B-000	AP5000 swing arm handles - For panel 5AP5130.156B/156C-000	164
5ACCHD00.185B-000	AP5000 swing arm handles - For panel 5AP5130.185B/185C-000	164
5ACCHD00.1906-000	AP5000 swing arm handles - For panel 5AP5120.1906-000	164
5ACCHD00.215C-000	AP5000 swing arm handles - For panel 5AP5130.215C-000	164
5ACCHD00.240C-000	AP5000 swing arm handles - For panel 5AP5130.240C-000	164
5ACCHD01.156B-000	AP5000 swing arm handles - For panel 5AP5230.156B/156C-000	164
5ACCHD01.185B-000	AP5000 swing arm handles - For panel 5AP5230.185B/185C-000	164
5ACCHD01.215C-000	AP5000 swing arm handles - For panel 5AP5230.215C-000	164
5ACCHD01.215I-000	AP5000 swing arm handles - For panel 5AP5230.215I-000	164
5ACCHD01.240C-000	AP5000 swing arm handles - For panel 5AP5230.240C-000	164

Order number	Short description	Page
	Heat pipe	
5ACCHP00.0000-000	AP5000 heat pipe - For PPC2100 (5PPC2100.BYxx-002) - For swing arm mounting unit	277
5ACCHP00.0004-000	AP5000 heat pipe - For PPC2100 (5PPC2100.BYxx-002) - For VESA mounting unit	277
	Interface options	
5ACCIF01.FPCC-000	Interface card - 2x CAN interfaces - 1x X2X Link interface - 1x POWERLINK interface - 512 kB nvSRAM - For APC2100/PPC2100/APC2200/PPC2200 - Only available with a new device	112
5ACCIF01.FPCS-000	Interface card - 1x RS485 interface - 1x CAN interface - 1x POWERLINK interface - 32 kB FRAM - For APC2100/PPC2100/APC2200/PPC2200 - Only available with a new device	118
5ACCIF01.FPLK-000	Interface card - 1x POWERLINK interface - Integrated 2-port hub - 512 kB nvSRAM - For APC2100/PPC2100/APC2200/PPC2200 - Only available with a new device	122
5ACCIF01.FPLS-000	Interface card - 1x RS232 interface - 1x POWERLINK interface - 32 kB FRAM - For APC2100/PPC2100/APC2200/PPC2200 - Only available with a new device	125
5ACCIF01.FPLS-001	Interface card - 1x RS232 interface - 1x POWERLINK interface - 512 kB nvSRAM - For APC2100/PPC2100/APC2200/PPC2200 - Only available with a new device	128
5ACCIF01.FPSC-000	Interface card - 1x RS232 interface - 1x CAN interface - 1x POWERLINK interface - 32 kB FRAM - For APC2100/PPC2100/APC2200/PPC2200 - Only available with a new device	131
5ACCIF01.FPSC-001	Interface card - 1x RS232 interface - 1x CAN interface - 1x X2X Link Interface - 1x POWERLINK interface - 512 kB nvSRAM - For APC2100/PPC2100/APC2200/PPC2200 - Only available with a new device	135
5ACCIF01.FSS0-000	Interface card - 2x RS422/RS485 interface - For APC2100/PPC2100/APC2200/PPC2200 - Only available with a new device	140
5ACCIF01.ICAN-000	Interface card - 1x CAN interface - For APC2100/PPC2100/APC2200/PPC2200 - Only available with a new device	144
	Mounting units	
5ACCMA00.0000-000	AP5000 swing arm mounting unit	101
5ACCMA00.0001-000	AP5000 swing arm mounting unit - 1x rear USB interface	102
5ACCMA00.0002-000	AP5000 swing arm mounting unit - 2x rear USB interface	104
5ACCMA00.0100-000	HMI mounting unit VESA IP54 - Leak tightness is only provided with suitable cable grommets.	106
5ACCMA00.0101-000	HMI mounting unit VESA IP54 w/USB - Leak tightness is only provided with suitable cable grommets.	108
5ACCMA01.0100-000	AP5000 VESA mounting unit IP10/IP20 - IP20 with 5AP5120.*-000 - IP10 with 5AP5130.*-000, 5AP5230.*-000	110
	Other	
5ACCRHMI.0007-000	HMI installation tool for swing arm: - 1x torque wrench ESD 0.3 - 1.2 Nm - 1x torque wrench 1.0 - 25.0 Nm - 1x hex-head bit 3.0, length 89 mm - 1x hex-head bit 5.0, length 89 mm - 1x Torx 10 bit, length 90 mm - 1x Torx 20 bit, length 89 mm - 1x Torx 25 bit, length 89 mm - 1x Torx 30 bit, length 89 mm - 1x quick-change chuck for torque wrench	273
	Panels	
5AP5120.1505-000	Automation Panel 15.0" XGA TFT - 1024 x 768 pixels (4:3) - Single-touch (analog resistive) - Swing arm mounting - Landscape format - For PPC2100 / PPC2200 / link modules	64
5AP5120.1906-000	Automation Panel 19.0" SXGA TFT - 1280 x 1024 pixels (5:4) - Single-touch (analog resistive) - Swing arm mounting - Landscape format - For PPC2100 / PPC2200 / link modules	66
5AP5130.156B-000	Automation Panel 15.6" HD TFT - 1366 x 768 pixels (16:9) - Multi-touch (projected capacitive) - Swing arm mounting - Landscape format - For PPC2100 / PPC2200 / link modules	68
5AP5130.156C-000	Automation Panel 15.6" Full HD TFT - 1920 x 1080 pixels (16:9) - Multi-touch (projected capacitive) - Swing arm mounting - Landscape format - For PPC2100 / PPC2200 / link modules	70
5AP5130.185B-000	Automation Panel 18.5" HD TFT - 1366 x 768 pixels (16:9) - Multi-touch (projected capacitive) - Swing arm mounting - Landscape format - For PPC2100 / PPC2200 / link modules	72
5AP5130.185C-000	Automation Panel 18.5" Full HD TFT - 1920 x 1080 pixels (16:9) - Multi-touch (projected capacitive) - Swing arm mounting - Landscape format - For PPC2100 / PPC2200 / link modules	74
5AP5130.215C-000	Automation Panel 21.5" Full HD TFT - 1920 x 1080 pixels (16:9) - Multi-touch (projected capacitive) - Swing arm mounting - Landscape format - For PPC2100 / PPC2200 / link modules	76
5AP5130.240C-000	Automation Panel 24.0" Full HD TFT - 1920 x 1080 pixels (16:9) - Multi-touch (projected capacitive) - Swing arm mounting - Landscape format - For PPC2100 / PPC2200 / link modules	78
5AP5230.156B-000	Automation Panel 15.6" HD TFT - 1366 x 768 pixels (16:9) - Multi-touch (projected capacitive) - Swing arm mounting - Landscape format - Expansion option - For PPC2100 / PPC2200 / link modules	80
5AP5230.156C-000	Automation Panel 15.6" Full HD TFT - 1920 x 1080 pixels (16:9) - Multi-touch (projected capacitive) - Swing arm mounting - Landscape format - Expansion option - For PPC2100 / PPC2200 / link modules	83
5AP5230.185B-000	Automation Panel 18.5" HD TFT - 1366 x 768 pixels (16:9) - Multi-touch (projected capacitive) - Swing arm mounting - Landscape format - Expansion option - For PPC2100 / PPC2200 / link modules	86
5AP5230.185C-000	Automation Panel 18.5" Full HD TFT - 1920 x 1080 pixels (16:9) - Multi-touch (projected capacitive) - Swing arm mounting - Landscape format - Expansion option - For PPC2100 / PPC2200 / link modules	89
5AP5230.215C-000	Automation Panel 21.5" Full HD TFT - 1920 x 1080 pixels (16:9) - Multi-touch (projected capacitive) - Swing arm mounting - Landscape format - Expansion option - For PPC2100 / PPC2200 / link modules	92
5AP5230.215I-000	Automation Panel 21.5" Full HD TFT - 1920 x 1080 pixels (16:9) - Multi-touch (projected capacitive) - Swing arm mounting - Portrait format - Expansion option - For PPC2100 / PPC2200 / link modules	95
5AP5230.240C-000	Automation Panel 24.0" Full HD TFT - 1920 x 1080 pixels (16:9) - Multi-touch (projected capacitive) - Swing arm mounting - Landscape format - Expansion option - For PPC2100 / PPC2200 / link modules	98
	System units	
5PPC2100.BY01-002	PPC2100 system unit - Intel Atom E3815 1.46 GHz - Single core - 1 GB SDRAM - For Automation Panel 5000	61
5PPC2100.BY11-002	PPC2100 system unit - Intel Atom E3825 1.33 GHz - Dual core - 1 GB SDRAM - For Automation Panel 5000	61
5PPC2100.BY22-002	PPC2100 system unit - Intel Atom E3826 1.46 GHz - Dual core - 2 GB SDRAM - For Automation Panel 5000	61
5PPC2100.BY34-002	PPC2100 system unit - Intel Atom E3827 1.75 GHz - Dual core - 4 GB SDRAM - For Automation Panel 5000	61
5PPC2100.BY44-002	PPC2100 system unit - Intel Atom E3845 1.91 GHz - Quad core - 4 GB SDRAM - For Automation Panel 5000	61
5PPC2100.BY48-002	PPC2100 system unit - Intel Atom E3845 1.91 GHz - Quad core - 8 GB SDRAM - For Automation Panel 5000	61
	Technology Guard	
0TG1000.01	Technology Guard (MSD)	250
0TG1000.02	Technology Guard (HID)	250
1TG4600.10-5	Automation Runtime Windows TG license	250
1TG4601.06-5	Automation Runtime Embedded, TG license	250
1TG4601.06-T	Automation Runtime Embedded Terminal TG license	250

Order number	Short description	Page
	Terminal blocks	
0TB1210.3100	Connector 300 VDC - 10-pin female - Cage clamp terminal block - Protected against vibration by the screw flange	275
	Windows 10 IoT Enterprise	
5SWW10.0543-MUL	Windows 10 IoT Enterprise 2016 LTSB - 64-bit - Entry - Multilingual - PPC2100 chipset Bay Trail - License (without Recovery DVD) - Only available with a new device	237
	Windows 10 IoT Enterprise 2016 LTSB	
5SWW10.0243-MUL	Windows 10 IoT Enterprise 2015 LTSB - 64-bit - Multilingual - PPC2100 chipset Bay Trail - License (without Recovery DVD) - Only available with a new device	240
	Windows 7 Professional/Ultimate	
5SWWI7.1100-ENG	Windows 7 Professional SP1 - 32-bit - English - DVD	246
5SWWI7.1100-GER	Windows 7 Professional SP1 - 32-bit - German - DVD	246
5SWWI7.1200-ENG	Windows 7 Professional SP1 - 64-bit - English - DVD	246
5SWWI7.1200-GER	Windows 7 Professional SP1 - 64-bit - German - DVD	246
5SWWI7.1300-MUL	Windows 7 Ultimate SP1 - 32-bit - Multilingual - DVD	246
5SWWI7.1400-MUL	Windows 7 Ultimate SP1 - 64-bit - Multilingual - DVD	246
	Windows Embedded 8.1 Industry Pro	
5SWWI8.0343-MUL	Windows Embedded 8.1 Industry Pro - 32-bit - Multilingual - For the PPC2100 - License	243
5SWWI8.0443-MUL	Windows Embedded 8.1 Industry Pro - 64-bit - Multilingual - For the PPC2100 - License	243
	Windows Embedded Standard 7	
5SWWI7.1543-ENG	Windows Embedded Standard 7 SP1 - 32-bit - Service Pack 1 - English - PPC2100 - License (without Recovery DVD) - Only available with a new device	248
5SWWI7.1643-ENG	Windows Embedded Standard 7 SP1 - 64-bit - Service Pack 1 - English - PPC2100 - License (without Recovery DVD) - Only available with a new device	248
5SWWI7.1743-MUL	Windows Embedded Standard 7 Premium SP1 - 32-bit - Service Pack 1 - English - PPC2100 - License (without Recovery DVD) - Only available with a new device	248
5SWWI7.1843-MUL	Windows Embedded Standard 7 Premium SP1 - 64-bit - Service Pack 1 - English - PPC2100 - License (without Recovery DVD) - Only available with a new device	248

4 Technical data

4.1 Complete system

4.1.1 Mechanical properties

4.1.1.1 Dimensions

Information:

All specifications in dimension diagrams and associated tables are in millimeters [mm].

The following diagrams are symbolic and only meant to illustrate how the dimension tables should be read.

2D and 3D data (DXF and STEP formats) can be downloaded from the B&R website (www.br-automation.com). To do this, search for the order number of the device using the search bar.

AP5120/5130 with flange connection on top - Dimensions

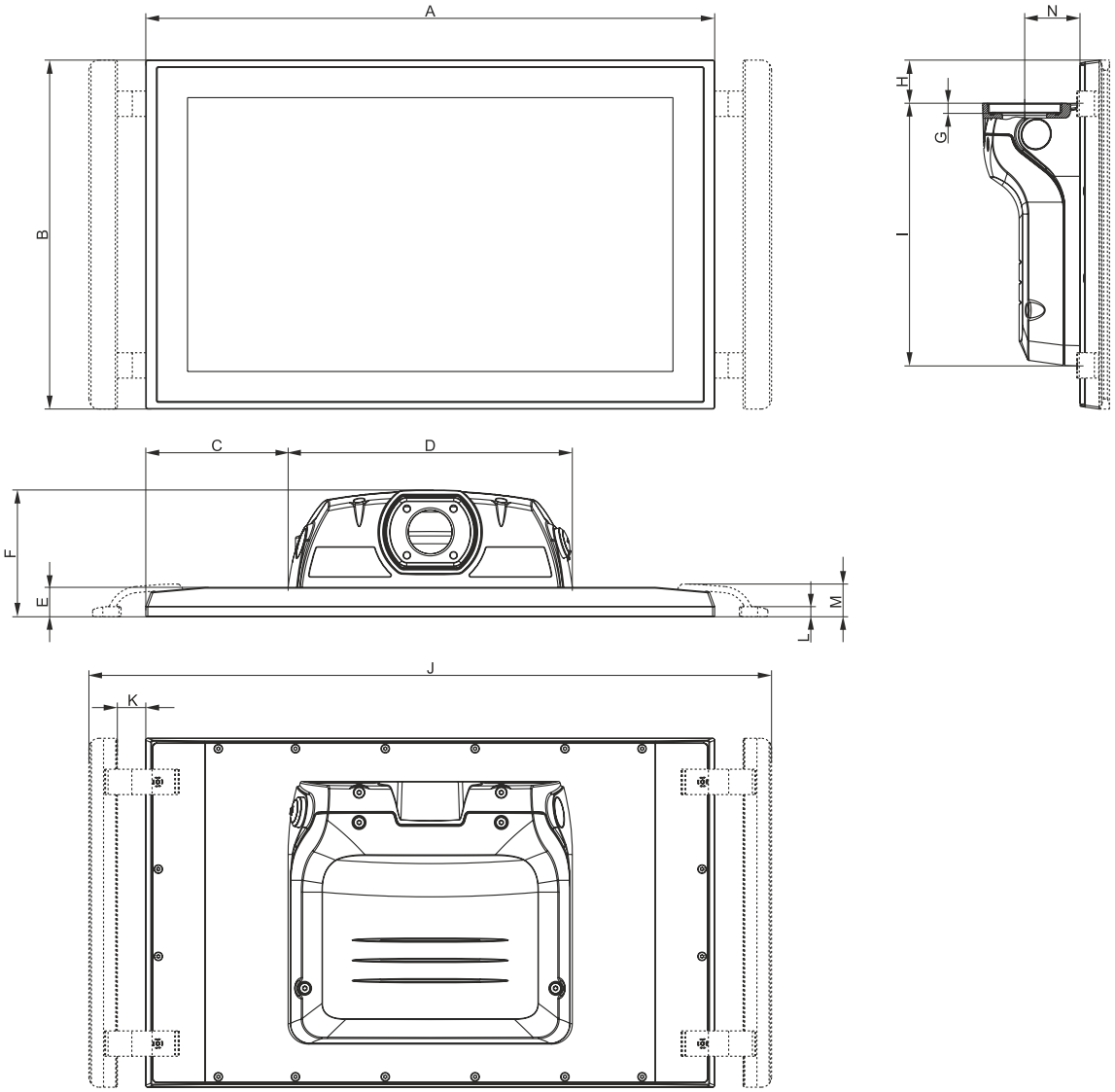

Panels															
Type	**Model number**	**A**	**B**	**C**	**D**	**E**	**F**	**G**	**H**	**I**	**J**	**K**	**L**	**M**	**N**
15.0" single-touch	5AP5120.1505-000	389	299	54.5	280	28	124	10	20	259	501	28	10	32.2	54.5
15.6" multi-touch	5AP5130.156B-000	433	269.5	76.5	280	29	125	10	5.25	259	545	28	10	32.2	54.5
15.6" multi-touch	5AP5130.156C-000	433	269.5	76.5	280	29	125	10	5.25	259	545	28	10	32.2	54.5
18.5" multi-touch	5AP5130.185B-000	494	306	107	280	29	125	10	23.5	259	606	28	10	32.2	54.5
18.5" multi-touch	5AP5130.185C-000	494	306	107	280	29	125	10	23.5	259	606	28	10	32.2	54.5
19.0" single-touch	5AP5120.1906-000	461.2	372	90.6	280	28	124	10	56.5	259	573.2	28	10	32.2	54.5
21.5" multi-touch	5AP5130.215C-000	560.5	344	140.25	280	29	125	10	42.5	259	672.5	28	10	32.2	54.5
24.0" multi-touch	5AP5130.240C-000	617.5	375	168.75	280	29	125	10	58	259	729.5	28	10	32.2	54.5

AP5120/5130 with flange connection on bottom - Dimensions

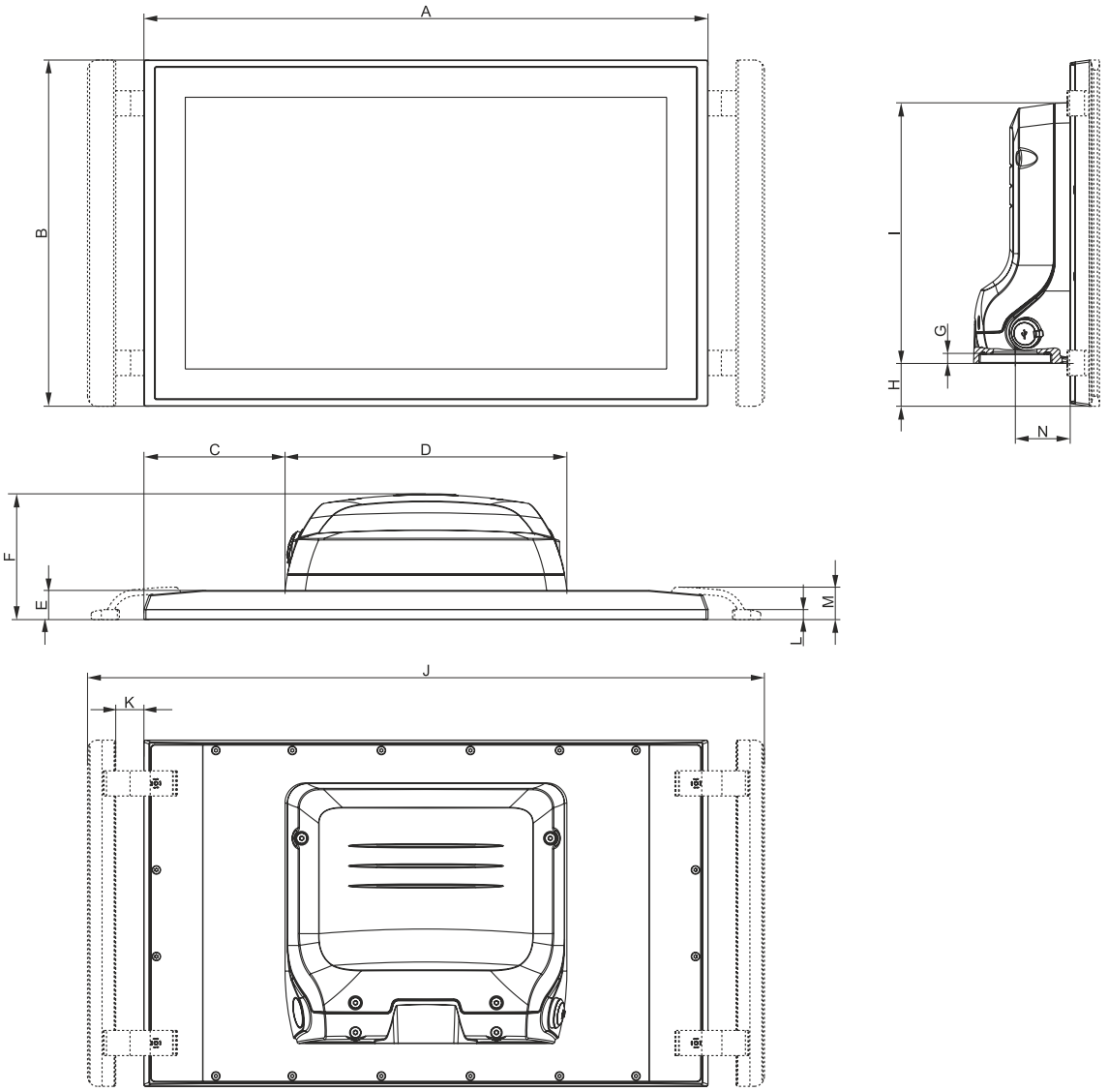

Panels															
Type	**Model number**	**A**	**B**	**C**	**D**	**E**	**F**	**G**	**H**	**I**	**J**	**K**	**L**	**M**	**N**
15.0" single-touch	5AP5120.1505-000	389	299	54.5	280	28	124	10	20	259	501	28	10	32.2	54.5
15.6" multi-touch	5AP5130.156B-000	433	269.5	76.5	280	29	125	10	5.25	259	545	28	10	32.2	54.5
15.6" multi-touch	5AP5130.156C-000	433	269.5	76.5	280	29	125	10	5.25	259	545	28	10	32.2	54.5
18.5" multi-touch	5AP5130.185B-000	494	306	107	280	29	125	10	23.5	259	606	28	10	32.2	54.5
18.5" multi-touch	5AP5130.185C-000	494	306	107	280	29	125	10	23.5	259	606	28	10	32.2	54.5
19.0" single-touch	5AP5120.1906-000	461.2	372	90.6	280	28	124	10	56.5	259	573.2	28	10	32.2	54.5
21.5" multi-touch	5AP5130.215C-000	560.5	344	140.25	280	29	125	10	42.5	259	672.5	28	10	32.2	54.5
24.0" multi-touch	5AP5130.240C-000	617.5	375	168.75	280	29	125	10	58	259	729.5	28	10	32.2	54.5

AP5230 with flange connection on top - Dimensions

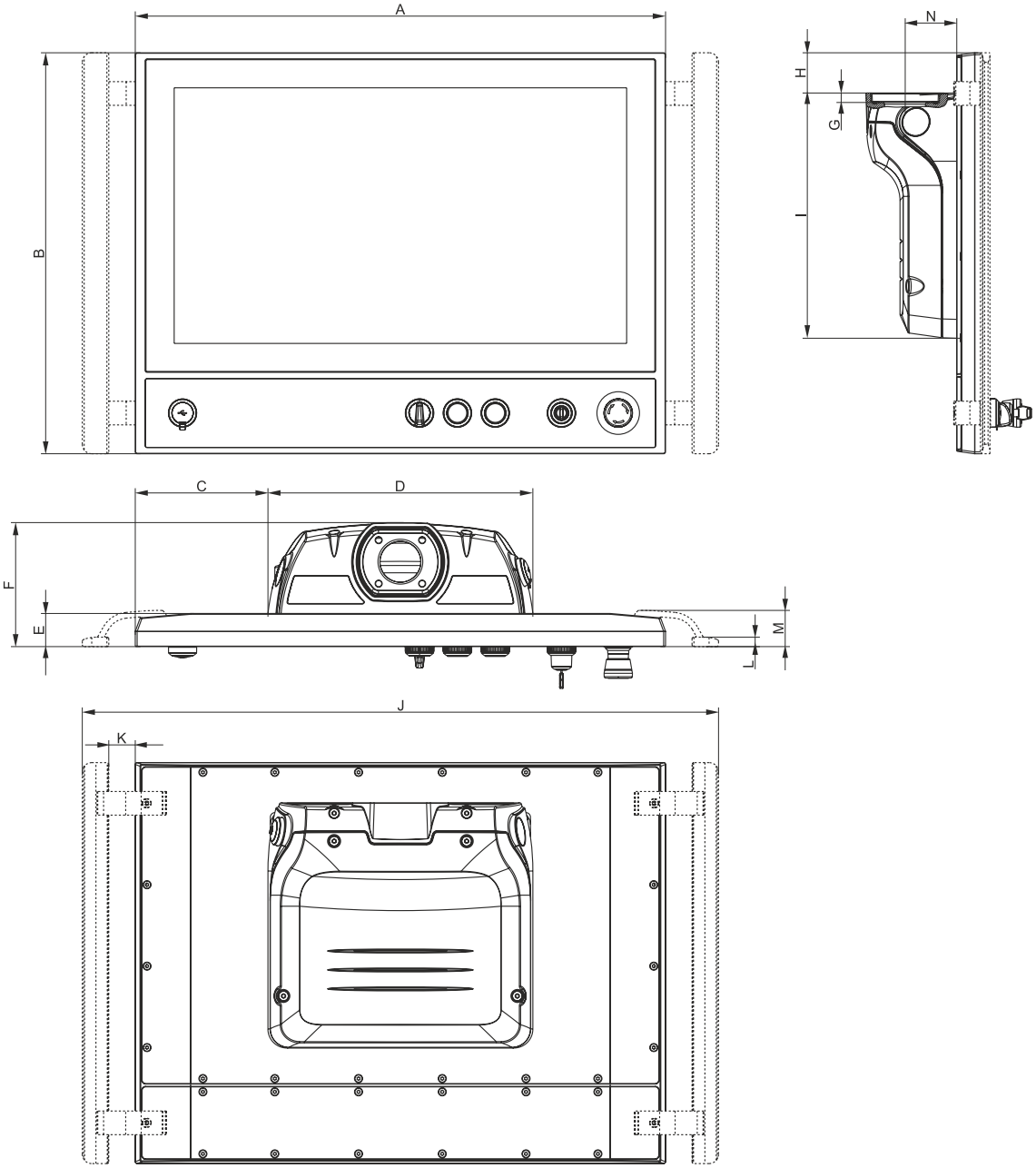

Panels (with expansion option)															
Type	**Model number**	**A**	**B**	**C**	**D**	**E**	**F**	**G**	**H**	**I**	**J**	**K**	**L**	**M**	**N**
15.6" multi-touch	5AP5230.156B-000	433	349	76.5	280	35	131	10	5.25	259	545	28	10	38.2	54.5
15.6" multi-touch	5AP5230.156C-000	433	349	76.5	280	35	131	10	5.25	259	545	28	10	38.2	54.5
18.5" multi-touch	5AP5230.185B-000	494	385.5	107	280	35	131	10	23.5	259	606	28	10	38.2	54.5
18.5" multi-touch	5AP5230.185C-000	494	385.5	107	280	35	131	10	23.5	259	606	28	10	38.2	54.5
21.5" multi-touch	5AP5230.215C-000	560.5	423.5	140.25	280	35	131	10	42.5	259	672.5	28	10	38.2	54.5
21.5" multi-touch	5AP5230.215I-000	352	632	36	280	35	131	10	146.75	259	464	28	10	39.9	54.5
24.0" multi-touch	5AP5230.240C-000	617.5	454.5	168.75	280	35	131	10	58	259	729.5	28	10	38.2	54.5

AP5230 with flange connection on bottom - Dimensions

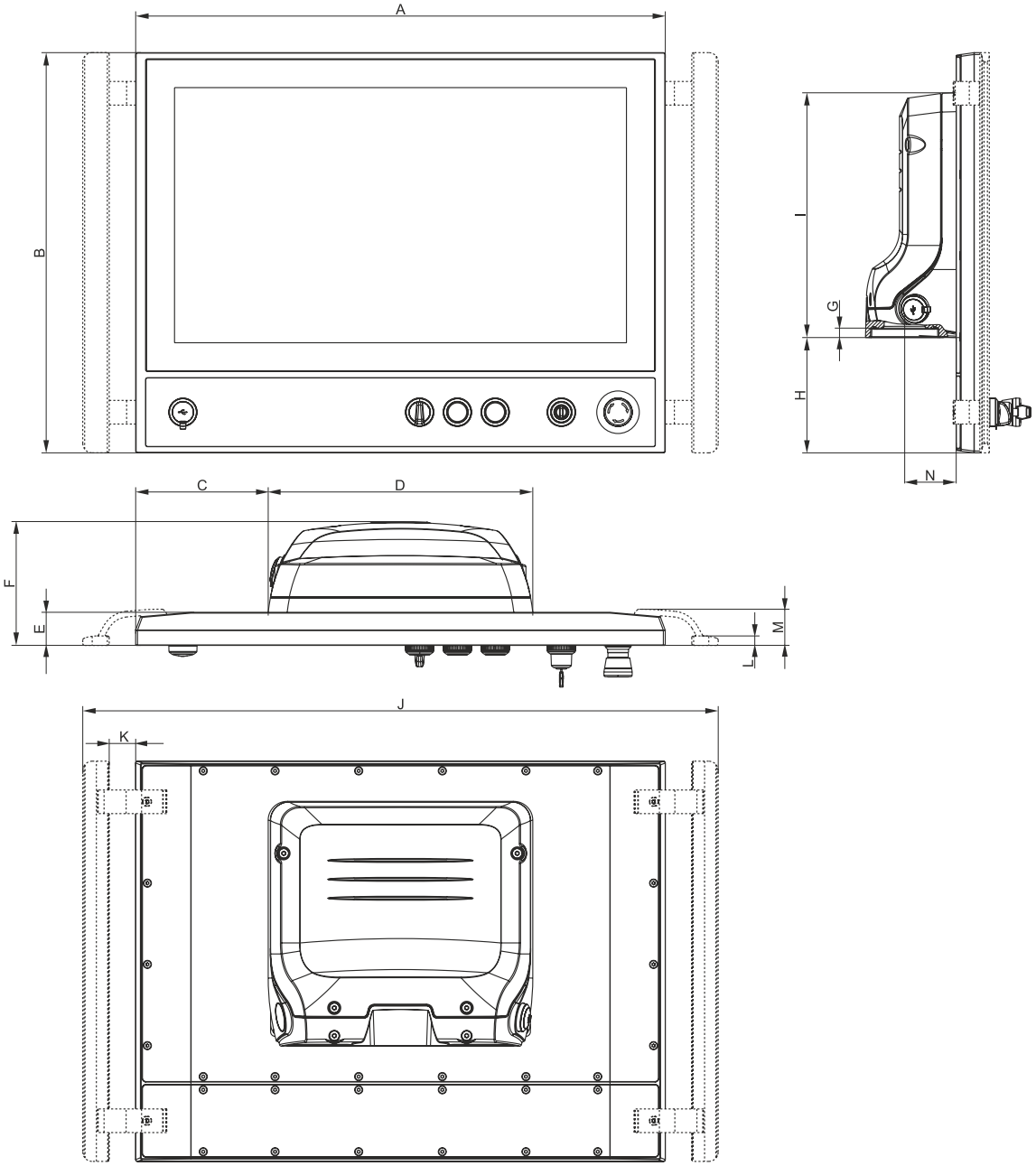

Panels (with expansion option)															
Type	**Model number**	**A**	**B**	**C**	**D**	**E**	**F**	**G**	**H**	**I**	**J**	**K**	**L**	**M**	**N**
15.6" multi-touch	5AP5230.156B-000	433	349	76.5	280	35	131	10	84.75	259	545	28	10	38.2	54.5
15.6" multi-touch	5AP5230.156C-000	433	349	76.5	280	35	131	10	84.75	259	545	28	10	38.2	54.5
18.5" multi-touch	5AP5230.185B-000	494	385.5	107	280	35	131	10	103	259	606	28	10	38.2	54.5
18.5" multi-touch	5AP5230.185C-000	494	385.5	107	280	35	131	10	103	259	606	28	10	38.2	54.5
21.5" multi-touch	5AP5230.215C-000	560.5	423.5	140.25	280	35	131	10	122	259	672.5	28	10	38.2	54.5
21.5" multi-touch	5AP5230.215I-000	352	632	36	280	35	131	10	226.25	259	464	28	10	39.9	54.5
24.0" multi-touch	5AP5230.240C-000	617.5	454.5	168.75	280	35	131	10	137.5	259	729.5	28	10	38.2	54.5

Rotary flange - Dimensions

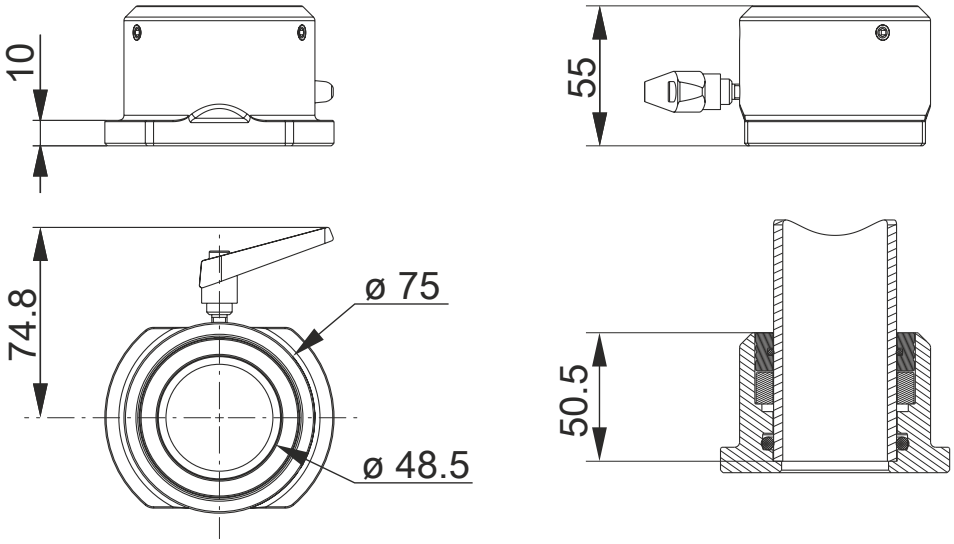

Dimensions for swivel-tilt flange

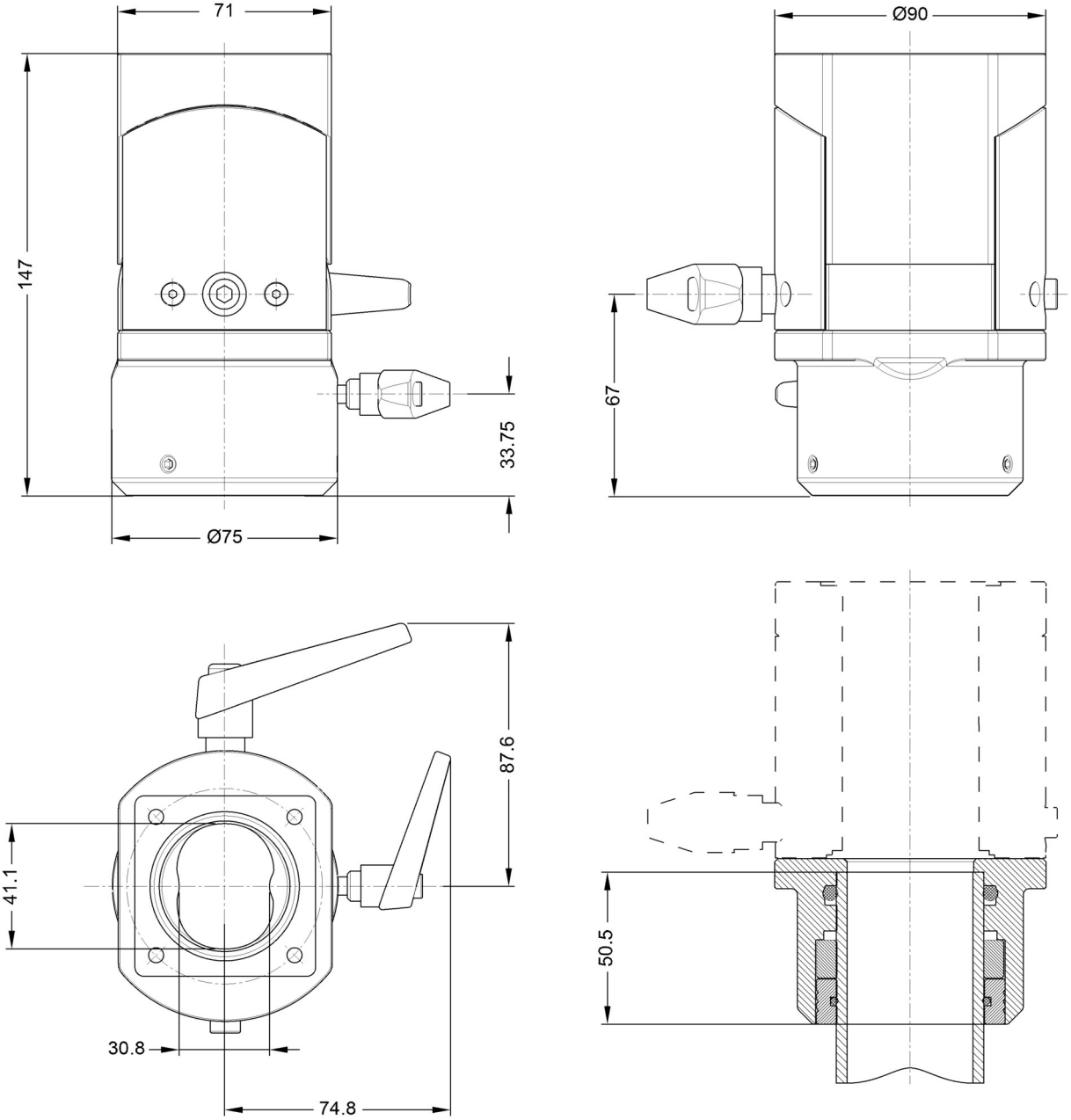

Adapter for Rittal flange - Dimensions

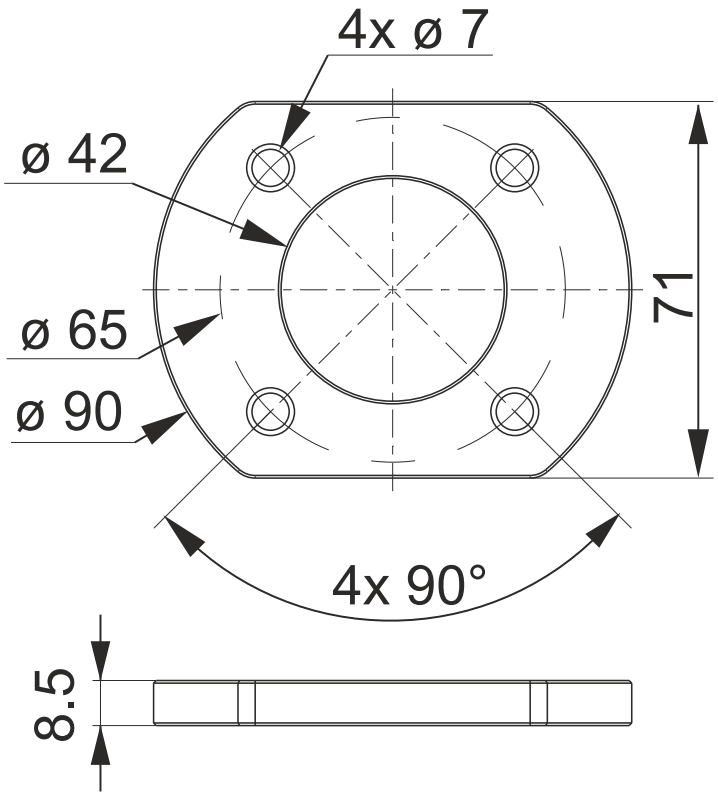

AP5120/5130 VESA connection - Dimensions

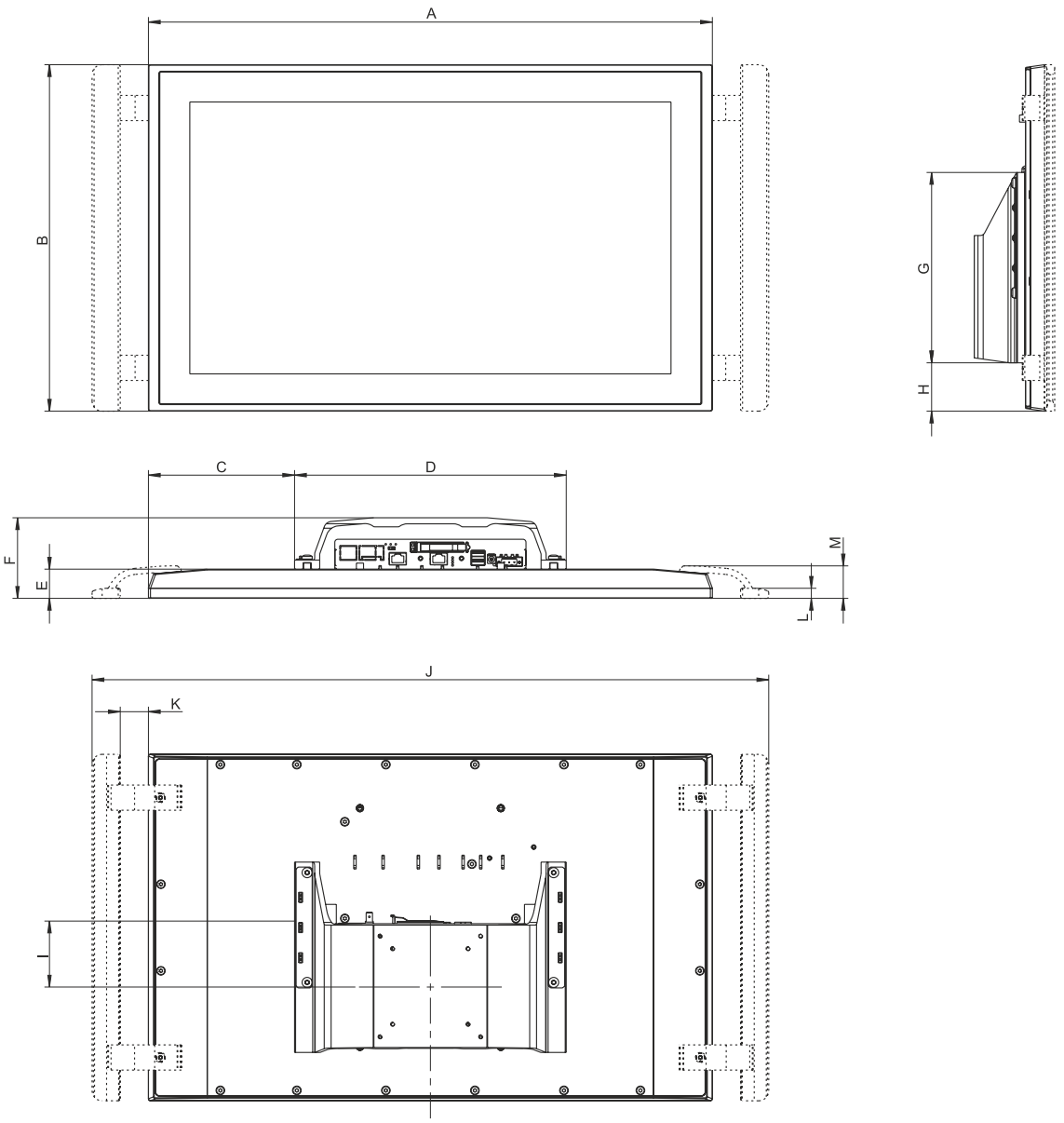

Panels														
Type	**Model number**	**A**	**B**	**C**	**D**	**E**	**F**	**G**	**H**	**I**	**J**	**K**	**L**	**M**
15" single-touch	5AP5120.1505-000	389	299	59.5	270	28	79	189	25.5	65.5	501	28	10	32.2
15.6" multi-touch	5AP5130.156B-000	433	269.5	81.5	270	29	80	189	10.75	65.5	545	28	10	32.2
15.6" multi-touch	5AP5130.156C-000	433	269.5	81.5	270	29	80	189	10.75	65.5	545	28	10	32.2
18.5" multi-touch	5AP5130.185B-000	494	306	112	270	29	80	189	29	65.5	606	28	10	32.2
18.5" multi-touch	5AP5130.185C-000	494	306	112	270	29	80	189	29	65.5	606	28	10	32.2
19" single-touch	5AP5120.1906-000	461.2	372	95.6	270	28	79	189	62	65.5	573.2	28	10	32.2
21.5" multi-touch	5AP5130.215C-000	560.5	344	145.25	270	29	80	189	48	65.5	672.5	28	10	32.2
24.0" multi-touch	5AP5130.240C-000	617.5	375	173.75	270	29	80	189	63.5	65.5	729.5	28	10	32.2

AP5230 VESA connection - Dimensions

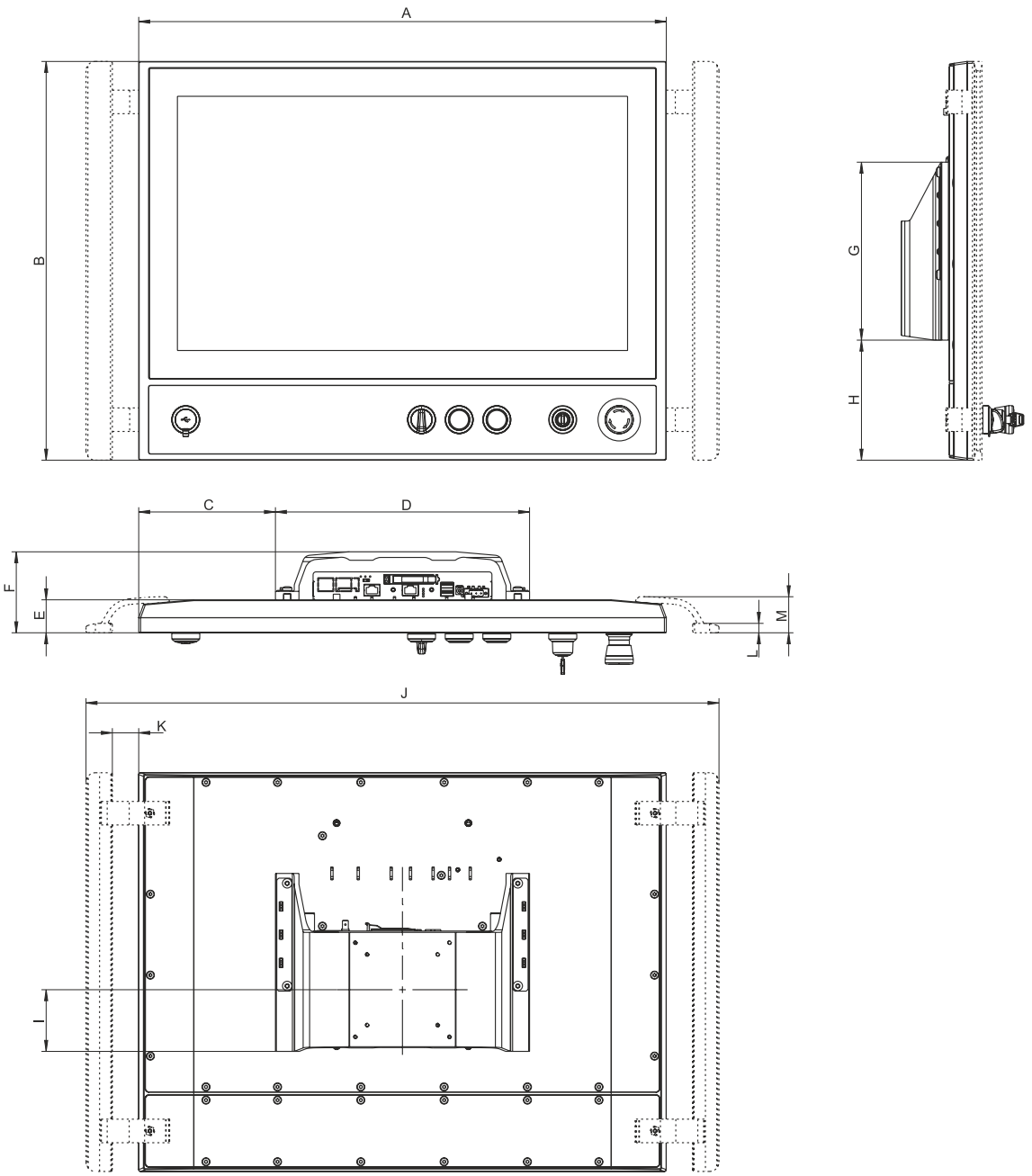

Panels (with expansion option)														
Type	**Model number**	**A**	**B**	**C**	**D**	**E**	**F**	**G**	**H**	**I**	**J**	**K**	**L**	**M**
15.6" multi-touch	5AP5230.156B-000	433	349	81.5	270	35	86	189	90.25	65.5	545	28	10	38.2
15.6" multi-touch	5AP5230.156C-000	433	349	81.5	270	35	86	189	90.25	65.5	545	28	10	38.2
18.5" multi-touch	5AP5230.185B-000	494	385.5	112	270	35	86	189	108.5	65.5	606	28	10	38.2
18.5" multi-touch	5AP5230.185C-000	494	385.5	112	270	35	86	189	108.5	65.5	606	28	10	38.2
21.5" multi-touch	5AP5230.215C-000	560.5	423.5	145.25	270	35	86	189	127.5	65.5	672.5	28	10	38.2
21.5" multi-touch	5AP5230.215I-000	352	632	41	270	35	86	189	231.75	65.5	464	28	10	39.9
24.0" multi-touch	5AP5230.240C-000	617.5	454.5	173.75	270	35	86	189	143	65.5	729.5	28	10	38.2

AP5120/5130 IP54 VESA connection - Dimensions

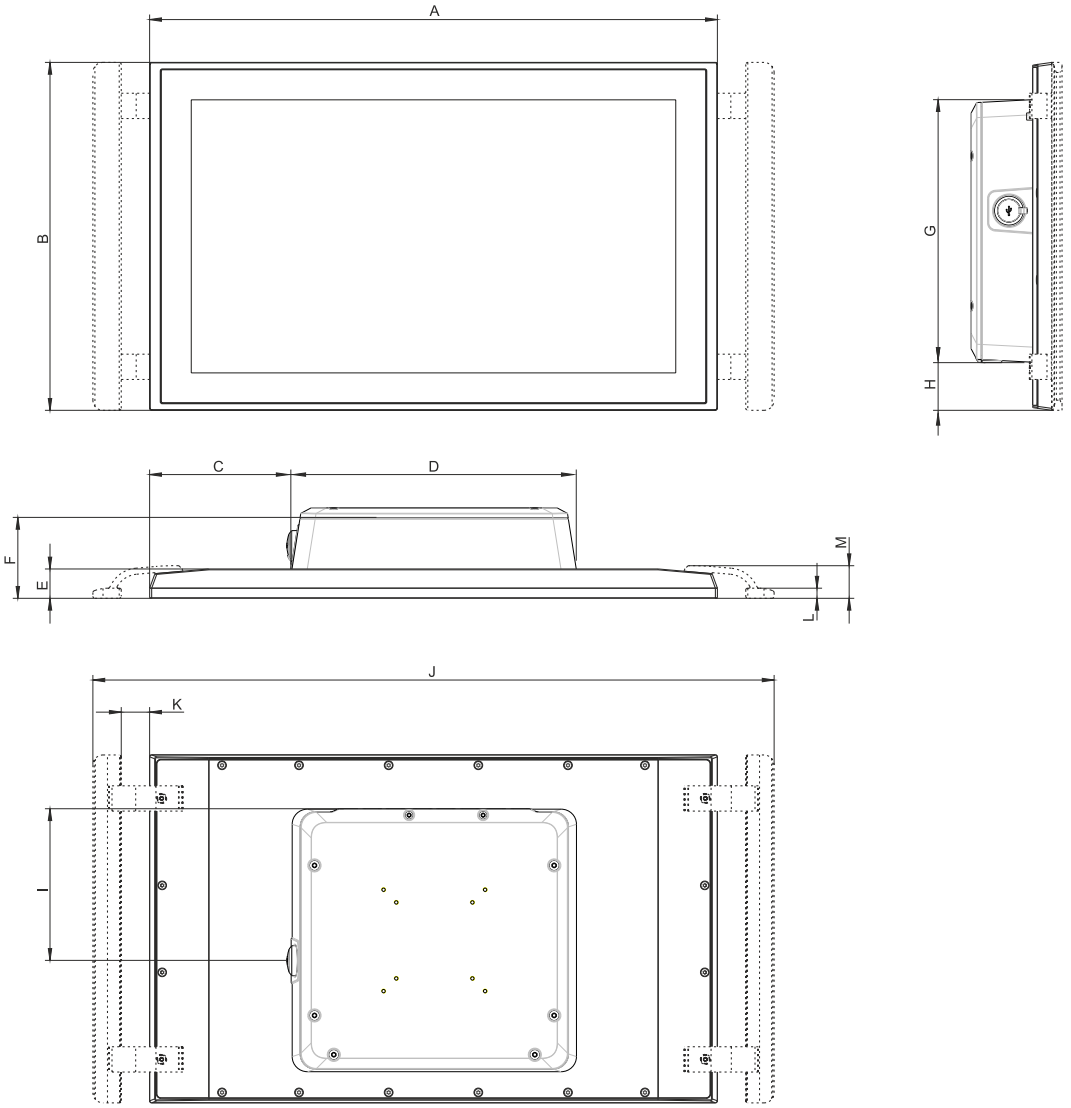

Panels														
Type	**Order number**	**A**	**B**	**C**	**D**	**E**	**F**	**G**	**H**	**I**	**J**	**K**	**L**	**M**
15" single-touch	5AP5120.1505-000	389	299	54.5	280	28	88.3	259	20	149.5	501	28	10	32.2
15.6" multi-touch	5AP5130.156B-000	433	269.5	76.5	280	29	89.3	259	5.3	149.5	545	28	10	32.2
15.6" multi-touch	5AP5130.156C-000	433	269.5	76.5	280	29	89.3	259	5.3	149.5	545	28	10	32.2
18.5" multi-touch	5AP5130.185B-000	494	306	107	280	29	89.3	259	23.5	149.5	606	28	10	32.2
18.5" multi-touch	5AP5130.185C-000	494	306	107	280	29	89.3	259	23.5	149.5	606	28	10	32.2
19" single-touch	5AP5120.1906-000	461.2	372	90.6	280	28	89.3	259	56.5	149.5	573.2	28	10	32.2
21.5" multi-touch	5AP5130.215C-000	560.5	344	140.3	280	29	89.3	259	42.5	149.5	672.5	28	10	32.2
24.0" multi-touch	5AP5130.240C-000	617.5	375	168.8	280	29	89.3	259	58	149.5	729.5	28	10	32.2

AP5230 IP54 VESA connection - Dimensions

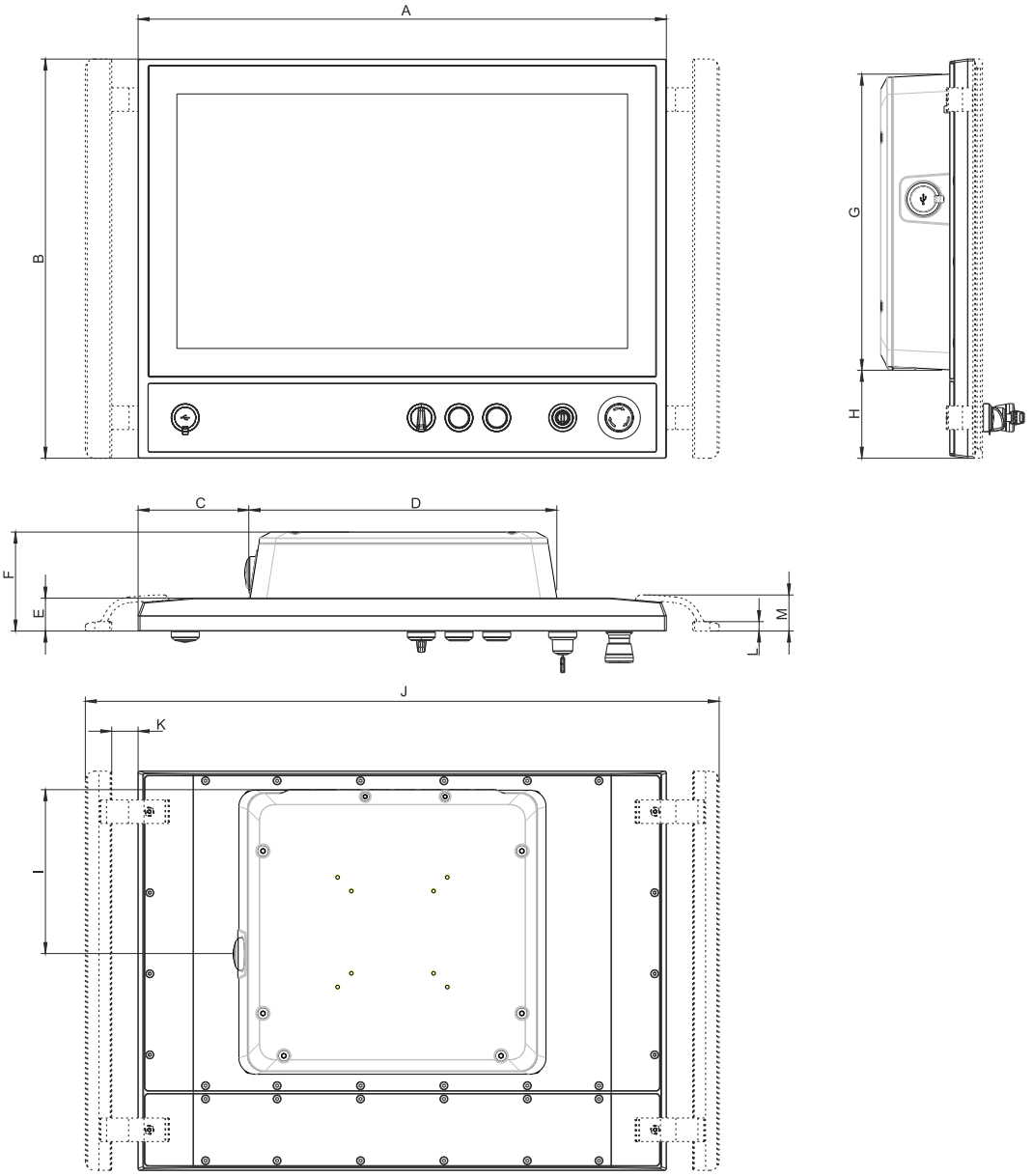

Panels (with expansion option)														
Type	**Order number**	**A**	**B**	**C**	**D**	**E**	**F**	**G**	**H**	**I**	**J**	**K**	**L**	**M**
15.6" multi-touch	5AP5230.156B-000	433	349	76.5	280	35	95.3	259	84.8	149.5	545	28	10	38.2
15.6" multi-touch	5AP5230.156C-000	433	349	76.5	280	35	95.3	259	84.8	149.5	545	28	10	38.2
18.5" multi-touch	5AP5230.185B-000	494	385.5	107	280	35	95.3	259	103	149.5	606	28	10	38.2
18.5" multi-touch	5AP5230.185C-000	494	385.5	107	280	35	95.3	259	103	149.5	606	28	10	38.2
21.5" multi-touch	5AP5230.215C-000	560.5	423.5	140.3	280	35	95.3	259	122	149.5	672.5	28	10	38.2
21.5" multi-touch	5AP5230.215I-000	352	632	36	280	35	95.3	259	226.3	149.5	464	28	10	39.9
24.0" multi-touch	5AP5230.240C-000	617.5	454.5	168.8	280	35	95.3	259	137.1	149.5	729.5	28	10	38.2

4.1.1.2 Mounting orientations

Swing arm mounting units

The angle of rotation of the Panel PC (variant with mounting unit 5ACCMA00.000x-000 and flange 5AC-CFL00.0000-000 or 5ACCFL00.0100-000 flange) can be set between -150° and +150° using the locking lever on the attached flange.
The tilt angle of the panel PC (only variant with mounting unit 5ACCMA00.000x-000 and flange 5AC-CFL00.0100-000) can be set between -15° and +15°.

> **Caution!**
>
> **After the angle of rotation has been set, the locking lever must be locked into position (approx. 5 Nm).**
>
> **The screw in the locking lever is not permitted to be tightened. Fixing must be carried out exclusively with the locking lever.**

VESA mounting unit 5ACCMA01.0100-000

The following diagrams show the approved mounting orientations for Panel PC devices with VESA mounting unit 5ACCMA01.0100-000. A PPC2100 (AP5000) with VESA mounting unit is only permitted to be installed as shown or described below; the figure shows an example image.

	Inclination [°]	Derating [°C]		Inclination [°]	Derating
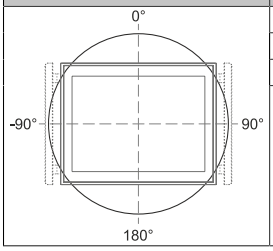	0 to ±20	No limitation	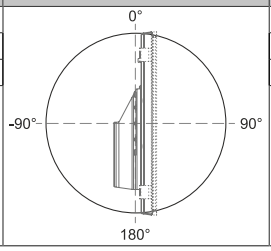	0 to ±20	No limitation
	±21 to ±45	-5		±21 to ±45	-5
	±46 to ±90	-10		±46 to ±90	-10
	-			-	

4.1.1.3 Weight specifications

AP5000 panels

Type	Model number	Weight [g]
15" single-touch	5AP5120.1505-000	5200
15.6" multi-touch	5AP5130.156B-000	4700
15.6" multi-touch	5AP5130.156C-000	4700
15.6" multi-touch (expansion option)	5AP5230.156B-000	6400
15.6" multi-touch (expansion option)	5AP5230.156C-000	6400
18.5" multi-touch	5AP5130.185B-000	6700
18.5" multi-touch	5AP5130.185C-000	6700
18.5" multi-touch (expansion option)	5AP5230.185B-000	8300
18.5" multi-touch (expansion option)	5AP5230.185C-000	8300
19" single-touch	5AP5120.1906-000	7300
21.5" multi-touch	5AP5130.215C-000	7300
21.5" multi-touch (expansion option)	5AP5230.215C-000	8900
21.5" multi-touch (expansion option)	5AP5230.215I-000	9600
24.0" multi-touch	5AP5130.240C-000	8500
24.0" multi-touch (expansion option)	5AP5230.240C-000	10300

System units and components

Component	Model number	Weight [g]
System units	5PPC2100.BYxx-002	577
CFast cards	5CFAST.xxxx-00	10
	5CFAST.xxxx-10	10
Interface options	5ACCIF01.FPCC-000	25
	5ACCIF01.FPCS-000	25
	5ACCIF01.FPLK-000	25
	5ACCIF01.FPLS-000	25
	5ACCIF01.FPLS-001	25
	5ACCIF01.FPSC-000	25
	5ACCIF01.FPSC-001	25
	5ACCIF01.FSS0-000	25
	5ACCIF01.ICAN-000	25

Mounting units

Type	Model number	Weight [g]
Swing arm mounting unit without USB	5ACCMA00.0000-000	2500
Swing arm mounting unit with 1x USB	5ACCMA00.0001-000	2500
Swing arm mounting unit with 2x USB	5ACCMA00.0002-000	2500
VESA mounting unit	5ACCMA01.0100-000	700
VESA IP54 mounting unit without USB	5ACCMA00.0100-000	2500
VESA IP54 mounting unit with 1x USB	5ACCMA00.0101-000	2500

Flanges

Type	Model number	Weight [g]
Rotary flange	5ACCFL00.0000-000	530
Swivel-tilt flange	5ACCFL00.0100-000	1666
Rittal flange adapter	5ACCFL00.0200-000	93

Extension options

Type	Model number	Weight [g]
15.6" expansion cover	5ACCKP00.156B-000	600
15.6" expansion units	5ACCKP01.156B-000	800
	5ACCKP04.156B-000	800
18.5" expansion cover	5ACCKP00.185B-000	600
18.5" expansion units	5ACCKP01.185B-000	900
	5ACCKP03.185B-000	900
	5ACCKP04.185B-000	900
	5ACCKP05.185B-000	900
21.5" expansion cover	5ACCKP00.215C-000	800
21.5" expansion units	5ACCKP01.215C-000	1000
	5ACCKP03.215C-000	1000
	5ACCKP04.215C-000	1000
	5ACCKP05.215C-000	1000
21.5" expansion cover	5ACCKP00.215I-000	500
21.5" expansion units	5ACCKP01.215I-000	700
	5ACCKP04.215I-000	700
24.0" expansion cover	5ACCKP00.240C-000	900
24.0" expansion units	5ACCKP01.240C-000	1100
	5ACCKP03.240C-000	1100
	5ACCKP04.240C-000	1100
	5ACCKP05.240C-000	1100

Handles

Type	Model number	Weight [g]
15" handles for AP5120	5ACCHD00.1505-000	500
15.6" handles for AP5130	5ACCHD00.156B-000	300
15.6" handles for AP5230	5ACCHD01.156B-000	600
18.5" handles for AP5130	5ACCHD00.185B-000	500
18.5" handles for AP5230	5ACCHD01.185B-000	700
19" handles for AP5120	5ACCHD00.1906-000	600
21.5" handles for AP5130	5ACCHD00.215C-000	600
21.5" handles for AP5230	5ACCHD01.215C-000	700
21.5" handles for AP5230	5ACCHD01.215I-000	1000
24.0" handles for AP5130	5ACCHD00.240C-000	600
24.0" handles for AP5230	5ACCHD01.240C-000	800

4.1.2 Environmental properties

4.1.2.1 Temperature specifications

Because it is possible to combine different panels and link modules, the following table provides a component-dependent overview of the maximum ambient temperatures resulting from these combinations.

> **Information:**
>
> **The maximum specified ambient temperatures for operation were determined under worst-case conditions. Experience has shown that higher ambient temperatures can be achieved with typical applications in Microsoft Windows, for example. The relevant test and assessment must be carried out individually by the user on site (reading out the temperatures in BIOS or using the B&R Control Center, for example).**

Information about worst-case conditions

- Thermal Analysis Tool (TAT) from Intel for simulating processor load (100% CPU, 100% memory, 100% graphic)
- BurnInTest 7.1 from PassMark Software for simulating 100% interface utilization using loopback adapters (100% Network)
- 2x 1 A USB load
- Maximum expansion and power consumption of the system
- 100% display brightness

4.1.2.1.1 Maximum ambient temperature for worst-case operation

> **Information:**
>
> **The following values apply to swing arm mounting units.**

All temperatures in degrees Celsius (°C) at 500 m above sea level, **non-condensing**. The maximum ambient temperature is typically derated 1°C per 1000 meters starting at 500 m above sea level.		**Maximum ambient temperature (system unit 5PPC2100.BYxx-002)**					
		5PPC2100. BY01-002 (E3815 1.46 GHz)	**5PPC2100. BY11-002** (E3825 1.33 GHz)	**5PPC2100. BY22-002** (E3826 1.46 GHz)	**5PPC2100. BY34-002** (E3827 1.75 GHz)	**5PPC2100. BY44-002** (E3845 1.91 GHz)	**5PPC2100. BY48-002** (E3845 1.91 GHz)
		55	**55**	**55**	**50**	**50**	**50**
Maximum ambient temperature (accessories)							
AP5000 panels	5AP5120.1505-000	✓	✓	✓	✓	✓	✓
	5AP5130.156B-000	✓	✓	✓	45	45	45
	5AP5130.156C-000	✓	✓	✓	45	45	45
	5AP5230.156B-000	✓	✓	✓	45	45	45
	5AP5230.156C-000	✓	✓	✓	45	45	45
	5AP5130.185B-000	✓	✓	✓	45	45	45
	5AP5130.185C-000	✓	✓	✓	45	45	45
	5AP5230.185B-000	✓	✓	✓	45	45	45
	5AP5230.185C-000	✓	✓	✓	45	45	45
	5AP5120.1906-000	✓	✓	✓	✓	✓	✓
	5AP5130.215C-000	✓	✓	✓	45	45	45
	5AP5230.215C-000	45	45	45	45	45	45
	5AP5230.215I-000	✓	✓	✓	45	45	45
	5AP5130.240C-000	45	45	45	45	45	45
	5AP5230.240C-000	45	45	45	45	45	45
AP5000 expansion units	5ACCKP01.xxxx-000	✓	✓	✓	✓	✓	✓
	5ACCKP03.xxxx-000	✓	✓	✓	✓	✓	✓
	5ACCKP04.xxxx-000	✓	✓	✓	✓	✓	✓
	5ACCKP05.xxxx-000	✓	✓	✓	✓	✓	✓
CFast cards	5CFAST.xxxx-00 ≥ Rev. E0	✓	✓	✓	✓	✓	✓
	5CFAST.xxxx-10	✓	✓	✓	✓	✓	✓
Interface options	5ACCIF01.FPCC-000	✓	✓	✓	✓	✓	✓
	5ACCIF01.FPCS-000	✓	✓	✓	✓	✓	✓
	5ACCIF01.FPLK-000	✓	✓	✓	✓	✓	✓
	5ACCIF01.FPLS-000	✓	✓	✓	✓	✓	✓
	5ACCIF01.FPLS-001	✓	✓	✓	✓	✓	✓
	5ACCIF01.FPSC-000	✓	✓	✓	✓	✓	✓
	5ACCIF01.FPSC-001	✓	✓	✓	✓	✓	✓
	5ACCIF01.FSS0-000	✓	✓	✓	✓	✓	✓
	5ACCIF01.ICAN-000	✓	✓	✓	✓	✓	✓

Information:

The following values apply to VESA mounting units.

All temperature specifications in degrees Celsius (°C) at 500 m above sea level, **non-condensing**.		**Maximum ambient temperature (system unit 5PPC2100.BYxx-002)**					
The maximum ambient temperature is typically derated 1°C per 1000 meters starting at 500 m above sea level.		**5PPC2100. BY01-002** (E3815 1.46 GHz)	**5PPC2100. BY11-002** (E3825 1.33 GHz)	**5PPC2100. BY22-002** (E3826 1.46 GHz)	**5PPC2100. BY34-002** (E3827 1.75 GHz)	**5PPC2100. BY44-002** (E3845 1.91 GHz)	**5PPC2100. BY48-002** (E3845 1.91 GHz)
		50	**50**	**50**	**50**	**50**	**50**
Maximum ambient temperature (accessories)							
AP5000 panels	5AP5120.1505-000	✓	✓	✓	✓	✓	✓
	5AP5130.156B-000	✓	✓	✓	45	45	45
	5AP5130.156C-000	✓	✓	✓	45	45	45
	5AP5230.156B-000	✓	✓	✓	45	45	45
	5AP5230.156C-000	✓	✓	✓	45	45	45
	5AP5130.185B-000	✓	✓	✓	45	45	45
	5AP5130.185C-000	✓	✓	✓	45	45	45
	5AP5230.185B-000	✓	✓	✓	45	45	45
	5AP5230.185C-000	✓	✓	✓	45	45	45
	5AP5120.1906-000	✓	✓	✓	✓	✓	✓
	5AP5130.215C-000	✓	✓	✓	45	45	45
	5AP5230.215C-000	45	45	45	45	45	45
	5AP5230.215I-000	✓	✓	✓	45	45	45
	5AP5130.240C-000	45	45	45	45	45	45
	5AP5230.240C-000	45	45	45	45	45	45
AP5000 expansion units	5ACCKP01.xxxx-000	✓	✓	✓	✓	✓	✓
	5ACCKP03.xxxx-000	✓	✓	✓	✓	✓	✓
	5ACCKP04.xxxx-000	✓	✓	✓	✓	✓	✓
	5ACCKP05.xxxx-000	✓	✓	✓	✓	✓	✓
CFast cards	5CFAST.xxxx-00 ≥ Rev. E0	✓	✓	✓	✓	✓	✓
	5CFAST.xxxx-10	✓	✓	✓	✓	✓	✓
Interface options	5ACCIF01.FPCC-000	✓	✓	✓	✓	✓	✓
	5ACCIF01.FPCS-000	✓	✓	✓	✓	✓	✓
	5ACCIF01.FPLK-000	✓	✓	✓	✓	✓	✓
	5ACCIF01.FPLS-000	✓	✓	✓	✓	✓	✓
	5ACCIF01.FPLS-001	✓	✓	✓	✓	✓	✓
	5ACCIF01.FPSC-000	✓	✓	✓	✓	✓	✓
	5ACCIF01.FPSC-001	✓	✓	✓	✓	✓	✓
	5ACCIF01.FSS0-000	✓	✓	✓	✓	✓	✓
	5ACCIF01.ICAN-000	✓	✓	✓	✓	✓	✓

4.1.2.1.2 Minimum ambient temperature for worst-case operation

Information:

The following values apply to swing arm mounting units and VESA mounting units.

All temperatures in degrees Celsius (°C) at 500 m above sea level, **non-condensing**.		**Minimum ambient temperature (system unit 5PPC2100.BYxx-002)**					
		5PPC2100. BY01-002 (E3815 1.46 GHz)	**5PPC2100. BY11-002** (E3825 1.33 GHz)	**5PPC2100. BY22-002** (E3826 1.46 GHz)	**5PPC2100. BY34-002** (E3827 1.75 GHz)	**5PPC2100. BY44-002** (E3845 1.91 GHz)	**5PPC2100. BY48-002** (E3845 1.91 GHz)
		-20	**-20**	**-20**	**-20**	**-20**	**-20**
Minimum ambient temperature (accessories)							
AP5000 panels	5AP5120.1505-000	✓	✓	✓	✓	✓	✓
	5AP5130.156B-000	-10	-10	-10	-10	-10	-10
	5AP5130.156C-000	-10	-10	-10	-10	-10	-10
	5AP5230.156B-000	-10	-10	-10	-10	-10	-10
	5AP5230.156C-000	-10	-10	-10	-10	-10	-10
	5AP5130.185B-000	0	0	0	0	0	0
	5AP5130.185C-000	-10	-10	-10	-10	-10	-10
	5AP5230.185B-000	0	0	0	0	0	0
	5AP5230.185C-000	-10	-10	-10	-10	-10	-10
	5AP5120.1906-000	✓	✓	✓	✓	✓	✓
	5AP5130.215C-000	0	0	0	0	0	0
	5AP5230.215C-000	0	0	0	0	0	0
	5AP5230.215I-000	0	0	0	0	0	0
	5AP5130.240C-000	-10	-10	-10	-10	-10	-10
	5AP5230.240C-000	-10	-10	-10	-10	-10	-10
AP5000 expansion units	5ACCKP01.xxxx-000	✓	✓	✓	✓	✓	✓
	5ACCKP03.xxxx-000	✓	✓	✓	✓	✓	✓
	5ACCKP04.xxxx-000	✓	✓	✓	✓	✓	✓
	5ACCKP05.xxxx-000	✓	✓	✓	✓	✓	✓
CFast cards	5CFAST.xxxx-00 ≥ Rev. E0	✓	✓	✓	✓	✓	✓
	5CFAST.xxxx-10	✓	✓	✓	✓	✓	✓
Interface options	5ACCIF01.FPCC-000	✓	✓	✓	✓	✓	✓
	5ACCIF01.FPCS-000	✓	✓	✓	✓	✓	✓
	5ACCIF01.FPLK-000	✓	✓	✓	✓	✓	✓
	5ACCIF01.FPLS-000	✓	✓	✓	✓	✓	✓
	5ACCIF01.FPLS-001	✓	✓	✓	✓	✓	✓
	5ACCIF01.FPSC-000	✓	✓	✓	✓	✓	✓
	5ACCIF01.FPSC-001	✓	✓	✓	✓	✓	✓
	5ACCIF01.FSS0-000	✓	✓	✓	✓	✓	✓
	5ACCIF01.ICAN-000	✓	✓	✓	✓	✓	✓

4.1.2.1.3 Maximum ambient temperature for typical operation

Information about typical conditions

- BurnInTest V7.1 from PassMark Software for simulating moderate system and interface utilization using loopback adapters
- No permanent 100% processor utilization and graphics utilization
- 2x Gigabit Ethernet
- The total power of all USB interfaces is limited to 1 W.
- The power consumption of the complete system is limited to 45 W. For the power consumption of individual components, see "Power calculation" on page 47.
- 80% display brightness

Information:

The following values apply to swing arm mounting units and VESA mounting units.

All temperatures in degrees Celsius (°C) at 500 m above sea level, **non-condensing**. The maximum ambient temperature is typically derated 1°C per 1000 meters starting at 500 m above sea level.		Maximum ambient temperature (system unit 5PPC2100.BYxx-002)					
		5PPC2100. BY01-002 (E3815 1.46 GHz)	**5PPC2100. BY11-002** (E3825 1.33 GHz)	**5PPC2100. BY22-002** (E3826 1.46 GHz)	**5PPC2100. BY34-002** (E3827 1.75 GHz)	**5PPC2100. BY44-002** (E3845 1.91 GHz)	**5PPC2100. BY48-002** (E3845 1.91 GHz)
		55	**55**	**55**	**55**	**55**	**55**
Maximum ambient temperature (accessories)							
AP5000 panels	5AP5120.1505-000	✓	✓	✓	✓	✓	✓
	5AP5130.156B-000	✓	✓	✓	50	50	50
	5AP5130.156C-000	✓	✓	✓	50	50	50
	5AP5230.156B-000	✓	✓	✓	50	50	50
	5AP5230.156C-000	✓	✓	✓	50	50	50
	5AP5130.185B-000	✓	✓	✓	50	50	50
	5AP5130.185C-000	✓	✓	✓	50	50	50
	5AP5230.185B-000	✓	✓	✓	50	50	50
	5AP5230.185C-000	✓	✓	✓	50	50	50
	5AP5120.1906-000	✓	✓	✓	✓	✓	✓
	5AP5130.215C-000	✓	✓	✓	50	50	50
	5AP5230.215C-000	✓	✓	✓	50	50	50
	5AP5230.215I-000	50	50	50	50	50	50
	5AP5130.240C-000	50	50	50	50	50	50
	5AP5230.240C-000	50	50	50	50	50	50
AP5000 expansion units	5ACCKP01.xxxx-000	✓	✓	✓	✓	✓	✓
	5ACCKP03.xxxx-000	✓	✓	✓	✓	✓	✓
	5ACCKP04.xxxx-000	✓	✓	✓	✓	✓	✓
	5ACCKP05.xxxx-000	✓	✓	✓	✓	✓	✓
CFast cards	5CFAST.xxxx-00 ≥ Rev. E0	✓	✓	✓	✓	✓	✓
	5CFAST.xxxx-10	✓	✓	✓	✓	✓	✓
Interface options	5ACCIF01.FPCC-000	✓	✓	✓	✓	✓	✓
	5ACCIF01.FPCS-000	✓	✓	✓	✓	✓	✓
	5ACCIF01.FPLK-000	✓	✓	✓	✓	✓	✓
	5ACCIF01.FPLS-000	✓	✓	✓	✓	✓	✓
	5ACCIF01.FPLS-001	✓	✓	✓	✓	✓	✓
	5ACCIF01.FPSC-000	✓	✓	✓	✓	✓	✓
	5ACCIF01.FPSC-001	✓	✓	✓	✓	✓	✓
	5ACCIF01.FSS0-000	✓	✓	✓	✓	✓	✓
	5ACCIF01.ICAN-000	✓	✓	✓	✓	✓	✓

4.1.2.1.4 Determining the ambient temperature

1. Select the system unit.
2. The columns specify the maximum or minimum temperature in worst-case operation or the maximum temperature in typical operation of the complete system depending on the respective system unit.

> **Information:**
>
> **The maximum and typical temperature specifications correspond to a specification at 500 meters above sea level. The respective ambient temperature is derated approx. 1°C per 1000 meters starting at 500 m above sea level.**

3. If additional interface options and CFast cards are installed, these components can change the temperature limits of the PPC2100 system.
   - If a "✓" (check mark) is entered for the installed component, it can be operated without any problems.
   - If the installed component has a temperature specification (e.g. "45[°C]"), the ambient temperature of the complete system is not permitted to exceed this value.
4. Possible limitations may arise due to the mounting orientation of PPC2100. For additional information, see section "Mounting orientations" on page 34.
5. The relevant test and assessment must be carried out individually by the user on site (reading out the temperatures in BIOS or using the B&R Control Center). See section "Information about typical conditions" on page 39.

4.1.2.1.5 Ambient temperature for storage and transport

The individual components can be transported and stored within the following temperature ranges.

System units and components

Component	Model number	Storage [°C]	Transport [°C]
System units	5PPC2100.BYxx-002	-20 to 60	-20 to 60
CFast cards	5CFAST.xxxx-00	-50 to 100	-50 to 100
	5CFAST.032G-10 ≥ Rev. G0	-40 to 85	-40 to 85
	5CFAST.064G-10 ≥ Rev. E0	-40 to 85	-40 to 85
	5CFAST.128G-10 ≥ Rev. E0	-40 to 85	-40 to 85
	5CFAST.032G-10 ≤ Rev. F0	-55 to 95	-55 to 95
	5CFAST.064G-10 ≤ Rev. D0	-55 to 95	-55 to 95
	5CFAST.128G-10 ≤ Rev. D0	-55 to 95	-55 to 95
	5CFAST.256G-10	-40 to 85	-40 to 85
Interface options	5ACCIF01.FPCC-000	-20 to 60	-20 to 60
	5ACCIF01.FPCS-000	-20 to 60	-20 to 60
	5ACCIF01.FPLK-000	-20 to 60	-20 to 60
	5ACCIF01.FPLS-000	-20 to 60	-20 to 60
	5ACCIF01.FPLS-001	-20 to 60	-20 to 60
	5ACCIF01.FPSC-000	-20 to 60	-20 to 60
	5ACCIF01.FPSC-001	-20 to 60	-20 to 60
	5ACCIF01.FSS0-000	-20 to 60	-20 to 60
	5ACCIF01.ICAN-000	-20 to 60	-20 to 60

Panels

Type	Model number	Storage [°C]	Transport [°C]
15" single-touch	5AP5120.1505-000	-25 to 80	-25 to 80
15.6" multi-touch	5AP5130.156B-000	-25 to 70	-25 to 70
15.6" multi-touch	5AP5130.156C-000	-20 to 70	-20 to 70
15.6" multi-touch (expansion option)	5AP5230.156B-000	-25 to 70	-25 to 70
15.6" multi-touch (expansion option)	5AP5230.156C-000	-20 to 70	-20 to 70
18.5" multi-touch	5AP5130.185B-000	-20 to 60	-20 to 60
18.5" multi-touch	5AP5130.185C-000	-25 to 70	-25 to 70
18.5" multi-touch (expansion option)	5AP5230.185B-000	-20 to 60	-20 to 60
18.5" multi-touch (expansion option)	5AP5230.185C-000	-25 to 70	-25 to 70
19" single-touch	5AP5120.1906-000	-25 to 70	-25 to 70
21.5" multi-touch	5AP5130.215C-000	-20 to 60	-20 to 60
21.5" multi-touch (expansion option)	5AP5230.215C-000	-20 to 60	-20 to 60
21.5" multi-touch (expansion option)	5AP5230.215I-000	-20 to 60	-20 to 60
24.0" multi-touch	5AP5130.240C-000	-25 to 70	-25 to 70
24.0" multi-touch (expansion option)	5AP5230.240C-000	-25 to 70	-25 to 70

Extension options

Type	Model number	Storage [°C]	Transport [°C]
Expansion units	5ACCKP01.xxxx-000	-20 to 80	-20 to 80
	5ACCKP03.xxxx-000	-20 to 80	-20 to 80
	5ACCKP04.xxxx-000	-20 to 80	-20 to 80
	5ACCKP05.xxxx-000	-20 to 80	-20 to 80

4.1.2.1.6 Temperature monitoring

Sensors monitor temperature values at various areas in the PPC2100. For the position of temperature sensors, see section "Temperature sensor positions" on page 43. The values specified there represent the defined maximum temperature at this measuring point. If the temperature is exceeded, no alarm is triggered.

Temperatures[2)] can be read out in different ways in approved operating systems:

- BIOS
- ADI Control Center
- ADI Development Kit
- ADI .NET SDK
- B&R HMI Service Center
- B&R HMI Report
- ADI OPC UA Server
- Automation Runtime library

The CFast cards available from B&R are equipped with S.M.A.R.T support[3)]. Various parameters (e.g. temperature) can be read out in approved Microsoft Windows or B&R Linux operating systems.

[2)] The measured temperature is a guide value for the immediate ambient temperature, but it may have been influenced by neighboring components.
[3)] Self-Monitoring, Analysis and Reporting Technology

4.1.2.1.7 Temperature sensor positions

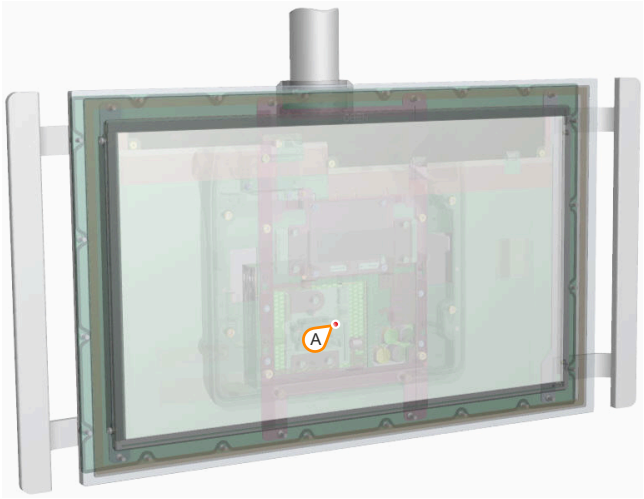

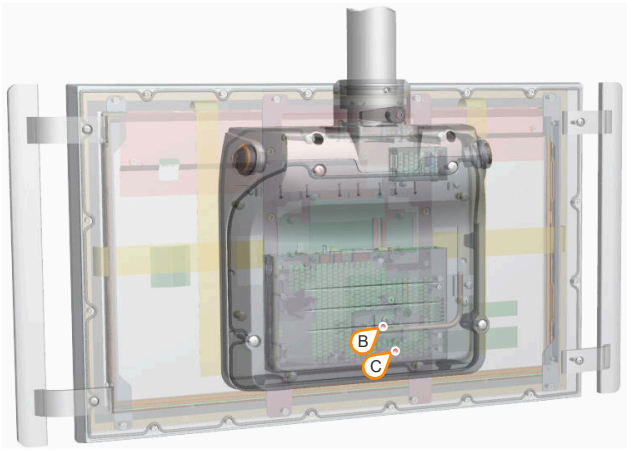

ADI sensors	Position	Measuring point for	Measurement	Max. specified
Panel	A	Display	Temperature of the display (sensor integrated on the panel).	5AP5120.1505-000: 85°C 5AP5130.156B-000: 75°C 5AP5130.156C-000: 80°C 5AP5230.156B-000: 80°C 5AP5230.156C-000: 80°C 5AP5130.185B-000: 80°C 5AP5130.185C-000: 80°C 5AP5230.185B-000: 80°C 5AP5230.185C-000: 80°C 5AP5120.1906-000: 80°C 5AP5130.215C-000: 80°C 5AP5230.215C-000: 80°C 5AP5230.215I-000: 80°C 5AP5130.240C-000: 75°C 5AP5230.240C-000: 75°C
System unit sensor 1	B	CPU	Temperature of the processor area (sensor integrated on the CPU board).	95°C
System unit sensor 2	C	Main memory	Temperature of the main memory area (sensor integrated on the CPU board).	95°C

4.1.2.2 Relative humidity

The following tables show the minimum and maximum relative humidity (at 30°C, non-condensing) of the individual components that are relevant for limiting the humidity of the complete system. The smallest or largest value must always be used for this determination. For more detailed information, see technical data or temperature/humidity diagrams of the individual components.

AP5000 panels

Type	Model number	Operation [%]	Storage [%]	Transport [%]
15" single-touch	5AP5120.1505-000	8 to 90	8 to 90	8 to 90
15.6" multi-touch	5AP5130.156B-000	5 to 90	5 to 90	5 to 90
15.6" multi-touch	5AP5130.156C-000	5 to 90	5 to 90	5 to 90
15.6" multi-touch (expansion option)	5AP5230.156B-000	5 to 90	5 to 90	5 to 90
15.6" multi-touch (expansion option)	5AP5230.156C-000	5 to 90	5 to 90	5 to 90
18.5" multi-touch	5AP5130.185B-000	5 to 90	5 to 90	5 to 90
18.5" multi-touch	5AP5130.185C-000	5 to 90	5 to 90	5 to 90
18.5" multi-touch (expansion option)	5AP5230.185B-000	5 to 90	5 to 90	5 to 90
18.5" multi-touch (expansion option)	5AP5230.185C-000	5 to 90	5 to 90	5 to 90
19" single-touch	5AP5120.1906-000	5 to 90	5 to 90	5 to 90
21.5" multi-touch	5AP5130.215C-000	5 to 90	5 to 90	5 to 90
21.5" multi-touch (expansion option)	5AP5230.215C-000	5 to 90	5 to 90	5 to 90
21.5" multi-touch (expansion option)	5AP5230.215I-000	5 to 90	5 to 90	5 to 90
24.0" multi-touch	5AP5130.240C-000	5 to 90	5 to 90	5 to 90
24.0" multi-touch (expansion option)	5AP5230.240C-000	5 to 90	5 to 90	5 to 90

System units and components

Component	Model number	Operation [%]	Storage [%]	Transport [%]
System units	5PPC2100.BYxx-002	5 to 90	5 to 95	5 to 95
CFast cards	5CFAST.xxxx-00	Max. 85% at 85°C	Max. 85% at 85°C	Max. 85% at 85°C
	5CFAST.032G-10 ≥ Rev. G0	Max. 85% at 85°C	Max. 85% at 85°C	Max. 85% at 85°C
	5CFAST.064G-10 ≥ Rev. E0	Max. 85% at 85°C	Max. 85% at 85°C	Max. 85% at 85°C
	5CFAST.128G-10 ≥ Rev. E0	Max. 85% at 85°C	Max. 85% at 85°C	Max. 85% at 85°C
	5CFAST.032G-10 ≤ Rev. F0	10 to 95	10 to 95	10 to 95
	5CFAST.064G-10 ≤ Rev. D0	10 to 95	10 to 95	10 to 95
	5CFAST.128G-10 ≤ Rev. D0	10 to 95	10 to 95	10 to 95
Interface options	5ACCIF01.FPCC-000	5 to 90	5 to 95	5 to 95
	5ACCIF01.FPCS-000	5 to 90	5 to 95	5 to 95
	5ACCIF01.FPLK-000	5 to 90	5 to 95	5 to 95
	5ACCIF01.FPLS-000	5 to 90	5 to 95	5 to 95
	5ACCIF01.FPLS-001	5 to 90	5 to 95	5 to 95
	5ACCIF01.FPSC-000	5 to 90	5 to 95	5 to 95
	5ACCIF01.FPSC-001	5 to 90	5 to 95	5 to 95
	5ACCIF01.FSS0-000	5 to 90	5 to 95	5 to 95
	5ACCIF01.ICAN-000	5 to 90	5 to 95	5 to 95

Extension options

Type	Model number	Operation [%]	Storage [%]	Transport [%]
Expansion units	5ACCKP01.xxxx-000	5 to 90	5 to 90	5 to 90
	5ACCKP03.xxxx-000	5 to 90	5 to 90	5 to 90
	5ACCKP04.xxxx-000	5 to 90	5 to 90	5 to 90
	5ACCKP05.xxxx-000	5 to 90	5 to 90	5 to 90

4.1.2.3 Vibration and shock

The following table provides an overview of the maximum vibrations and shock values of the complete system. Limitations are possible due to individual components.

Swing arm mounting unit - Vibration				
PPC2100 (AP5000)	Operation[1]		Storage[1)3)]	Transport[1)3)]
	Continuous	Periodic		
With CFast card	2 to 9 Hz: 1.75 mm amplitude 9 to 200 Hz: 0.5 g	2 to 9 Hz: 3.5 mm amplitude 9 to 200 Hz: 1 g	2 to 8 Hz: 7.5 mm amplitude 8 to 200 Hz: 2 g 200 to 500 Hz: 4 g	2 to 8 Hz: 7.5 mm amplitude 8 to 200 Hz: 2 g 200 to 500 Hz: 4 g
VESA IP20/IP10 mounting units VESA IP54 mounting units - Vibration				
PPC2100 (AP5000)	Operation[1]		Storage[1)3)]	Transport[1)3)]
	Continuous			
With CFast card	2 to 9 Hz: 1.75 mm amplitude 9 to 200 Hz: 0.5 g		2 to 8 Hz: 7.5 mm amplitude 8 to 200 Hz: 2 g 200 to 500 Hz: 4 g	2 to 8 Hz: 7.5 mm amplitude 8 to 200 Hz: 2 g 200 to 500 Hz: 4 g
Shock				
PPC2100 (AP5000)	Operation[2]		Storage[2)3)]	Transport[2)3)]
With CFast card	15 g, 11 ms		30 g, 6 ms	30 g, 6 ms

1) Testing is performed per EN 60068-2-6.
2) Testing is performed per EN 60068-2-27.
3) The specification refers to a device in its original packaging.

4.1.2.4 Protection

Under the following conditions, the Panel PC 2100 swing arm device offers **IP65 protection** on all sides per EN 60529:

- Correct installation of the Panel PC 2100 swing arm (see "Panel PC 2100 - Installation" on page 168)
- Correct installation of mounting unit 5ACCMA00.000x-000 (see "Installing the swing arm mounting unit" on page 179)
- Installation of all covers or components on interfaces and slots
- All ambient conditions are observed.

The Panel PC 2100 swing arm device additionally has "Type 4X indoor use only" per UL 50 under the same conditions.

Under the following conditions, the Panel PC 2100 swing arm device offers **IP54 protection** on all sides per EN 60529:

- Correct installation of the PPC2100 (see "Panel PC 2100 - Installation" on page 168)
- Correct installation of mounting unit 5ACCMA00.010x-000 (see "Installing the IP54 VESA mounting unit" on page 183)
- Installation of all covers or components on interfaces and slots
- All ambient conditions are observed.

The Panel PC 2100 swing arm device additionally has "Type 1X indoor use only" per UL 50 under the same conditions.

Under the following conditions, the Panel PC 2100 swing arm device offers **IP20 or IP10 protection** on all sides per EN 60529:

- Correct installation of the PPC2100 (see "Panel PC 2100 - Installation" on page 168)
- Correct installation of mounting unit 5ACCMA01.0100-000 (see "Installing the VESA mounting unit" on page 182)
  - With panel **5AP5120.xxxx-000**: **IP20** protection
  - With panel **5AP5130.xxxx-000** or **5AP5230.xxxx-000**: **IP10** protection
- Installation of all covers or components on interfaces and slots
- All ambient conditions are observed.

The Panel PC 2100 swing arm device additionally has "Type 1X indoor use only" per UL 50 under the same conditions.

4.1.3 Electrical properties

4.1.3.1 System units - Block diagram

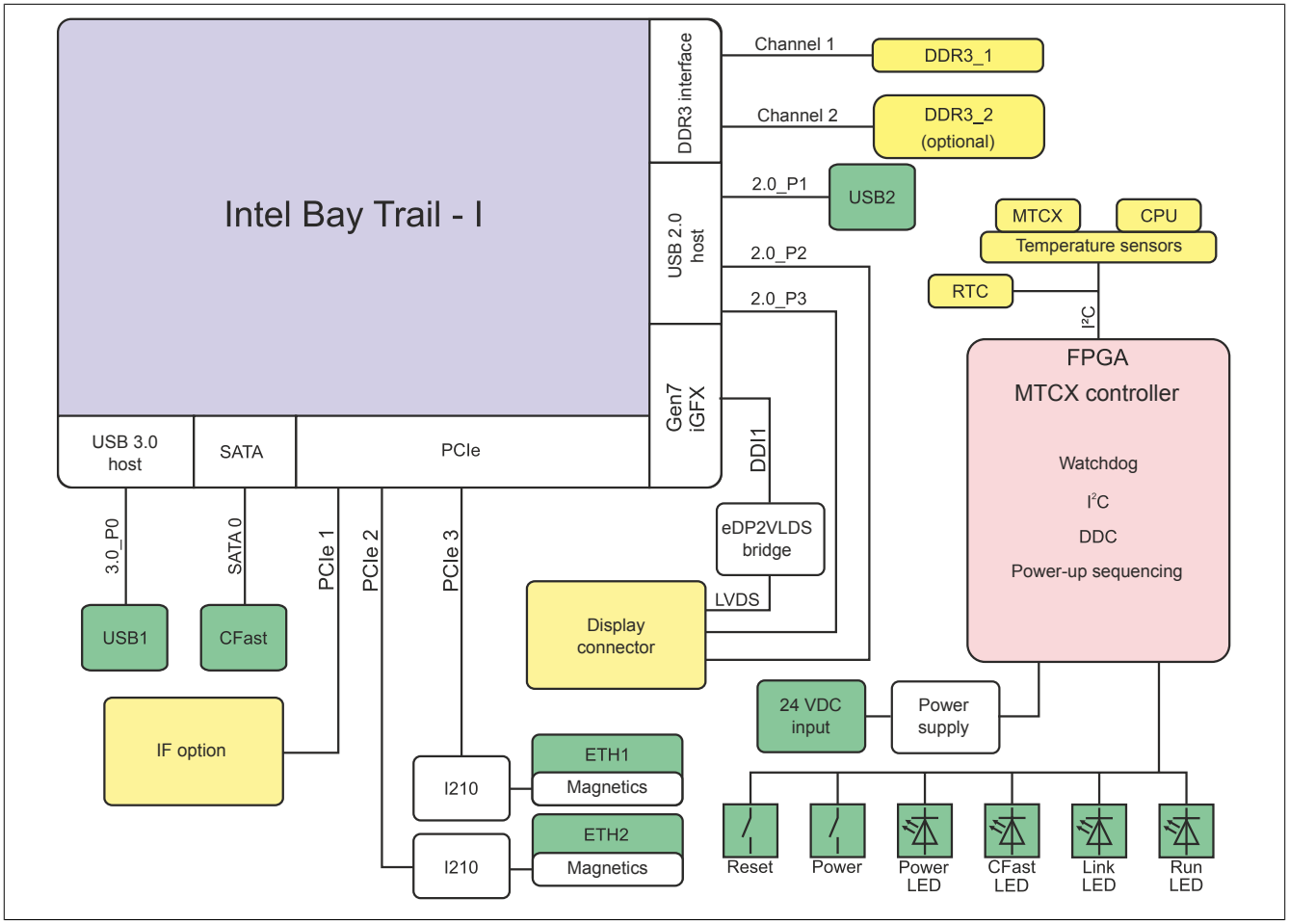

Legend			
	Internal interface	2.0_Px	USB 2.0 port x
	External interface	3.0_Px	USB 3.0 port x

4.1.3.2 Power calculation

In order to calculate the total power of the Panel PC 2100 swing arm (AP5000), the power ratings of the system unit used, the panel and all other installed components must be added together.

Information:

Unless otherwise specified, the following maximum values and additional consumers (e. g. USB devices) are not taken into account.

System units

Type	Model number	Total power consumption
PPC2100 E3815 1C 1.46 GHz	5PPC2100.BY01-002	12 W (without USB consumer) 22 W (with USB consumer)
PPC2100 E3825 2C 1.33 GHz	5PPC2100.BY11-002	13 W (without USB consumer) 23 W (with USB consumer)
PPC2100 E3826 2C 1.46 GHz	5PPC2100.BY22-002	15 W (without USB consumer) 25 W (with USB consumer)
PPC2100 E3827 2C 1.75 GHz	5PPC2100.BY34-002	17 W (without USB consumer) 27 W (with USB consumer)
PPC2100 E3845 4C 1.91 GHz	5PPC2100.BY44-002	19 W (without USB consumer) 29 W (with USB consumer)
PPC2100 E3845 4C 1.91 GHz	5PPC2100.BY48-002	20 W (without USB consumer) 30 W (with USB consumer)

AP5000 panels

Type	Model number	+5 V	+3.3 V	+12 V	Total power consumption
15" single-touch	5AP5120.1505-000	-	2.1 W	8.9 W	11 W
15.6" multi-touch	5AP5130.156B-000	1.8 W	-	15.6 W	17.4 W
15.6" multi-touch	5AP5130.156C-000	6 W	-	18 W	24 W
15.6" multi-touch expansion unit	5AP5230.156B-000	1.8 W	-	15.6 W	17.4 W
15.6" multi-touch expansion unit	5AP5230.156C-000	6 W	-	18 W	24 W
18.5" multi-touch	5AP5130.185B-000	6.1 W	-	10.8 W	16.9 W
18.5" multi-touch	5AP5130.185C-000	7 W	-	18.6 W	24.6 W
18.5" multi-touch expansion unit	5AP5230.185B-000	6.1 W	-	10.8 W	16.9 W
18.5" multi-touch expansion unit	5AP5230.185C-000	7 W	-	18.6 W	24.6 W
19" single-touch	5AP5120.1906-000	5 W	-	22 W	27 W
21.5" multi-touch	5AP5130.215C-000	4 W	-	15 W	19 W
21.5" multi-touch expansion unit	5AP5230.215C-000	4 W	-	15 W	19 W
21.5" multi-touch expansion unit	5AP5230.215I-000	4 W	-	15 W	19 W
24.0" multi-touch	5AP5130.240C-000	5 W	-	24.5 W	29.5 W
24.0" multi-touch expansion unit	5AP5230.240C-000	5 W	-	24.5 W	29.5 W

AP5000 expansion options

Type	Model number	+5 V	+3.3 V	+12 V	Total power consumption
Expansion units	5ACCKP01.xxxx-000	0.50 W	0.20 W	-	0.70 W
	5ACCKP03.xxxx-000	1.7 W	0.20 W	-	1.90 W
	5ACCKP04.xxxx-000	0.50 W	0.20 W	-	0.70 W
	5ACCKP05.xxxx-000	1.7 W	0.20 W	-	1.90 W

CFast cards

Type	Order number	+5 V	+3.3 V	+12 V	Total power consumption
SLC technology	5CFAST.xxxx-00	-	0.7 W read 0.7 W write 0.3 W idle	-	0.7 W read 0.7 W write 0.3 W idle
MLC technology	5CFAST.032G-10 ≥ G0 5CFAST.064G-10 ≥ E0	-	1.1 W read 1 W write 0.25 W idle	-	1.1 W read 1 W write 0.25 W idle
	5CFAST.128G-10 ≥ E0	-	1.1 W read 1.4 W write 0.25 W idle	-	1 W read 1.4 W write 0.25 W idle
	5CFAST.032G-10 ≤ F0 5CFAST.064G-10 ≤ D0 5CFAST.128G-10 ≤ D0	-	0.8 W read 1 W write 0.4 W idle	-	0.8 W read 1 W write 0.4 W idle
	5CFAST.256G-10	-	1.2 W read 1.9 W write 0.25 W idle	-	1.2 W read 1.9 W write 0.25 W idle

Interface options

Type	Order number	+5 V	+3.3 V	+12 V	Total power consumption
CAN	5ACCIF01.ICAN-000	0.45 W	0.05 W	-	0.50 W
POWERLINK CAN X2X	5ACCIF01.FPCC-000	0.45 W	1.55 W	-	2.00 W
POWERLINK RS485 CAN	5ACCIF01.FPCS-000	0.75 W	1.00 W	-	1.75 W
POWERLINK	5ACCIF01.FPLK-000	-	1.75 W	-	1.75 W
POWERLINK RS232	5ACCIF01.FPLS-000	0.50 W	1.00 W	-	1.50 W
POWERLINK RS232	5ACCIF01.FPLS-001	-	1.50 W	-	1.50 W
POWERLINK RS232 CAN	5ACCIF01.FPSC-000	0.75 W	1.00 W	-	1.75 W
POWERLINK RS232 CAN X2X	5ACCIF01.FPSC-001	0.60 W	1.40 W	-	2.00 W
2x RS422/RS485	5ACCIF01.FSS0-000	0.80 W	0.20 W	-	1.00 W

4.1.3.2.1 Calculation example

15.6" panel 5AP5130.156B-000	1.8 W + 15.6 W	17.40 W
Expansion unit 5ACCKP01.156B-000	0.5 W + 0.2 W	0.7 W
5PPC2100.BY11-002 system unit	23.00 W (with USB consumer)	23.00 W
POWERLINK interface option 5ACCIF01.FPLK-000	1.75 W	1.75 W
CFast card 5CFAST.256G-10	1.9 W (write)	1.90 W
	Total max.:	**44.75 W**

4.1.4 Device interfaces and slots

4.1.4.1 Device interfaces - Overview

Information:

The interfaces available on the device or module are numbered for the purpose of clear differentiation. The numbering used by the operating system may deviate, however.

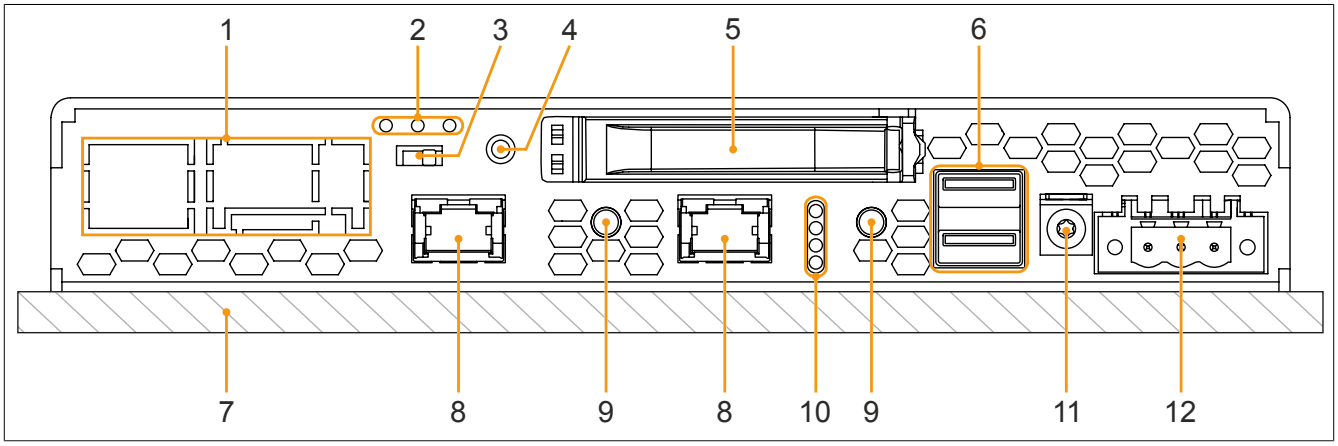

Figure 1: Device interfaces - Overview (sample figure)

Legend			
1	"IF option slot(IF1, IFx)" on page 55	7	Panel (configuration-dependent)
2	IF option - LED status indicators[1)]	8	"Ethernet interfaces" on page 51
3	IF option - Terminating resistor[1)]	9	"Power and reset buttons" on page 53
4	Screw point for cable shield	10	"LED status indicators" on page 54
5	"CFast slot" on page 53	11	"Grounding" on page 50
6	"USB interfaces" on page 52	12	"+24 VDC power supply" on page 50

1) Only available with installed interface option (configuration-dependent, see "Interface options" on page 112).

4.1.4.2 +24 VDC power supply

Danger!

This device is only permitted to by supplied by a SELV/PELV power supply unit or with safety extra-low voltage (SELV) per IEC 61010-2-201.

The necessary 3-pin connector is not included in delivery; for suitable accessories, see "0TB103.9x" on page 274.

The device is protected against overload and reverse polarity by a soldered fuse (10 A, fast-acting). If the fuse is defective (e.g. due to overload), the device must be sent to B&R for repairs. If the polarity is reversed, it is not necessary to replace the fuse.

Pin	Description	Figure
1	+	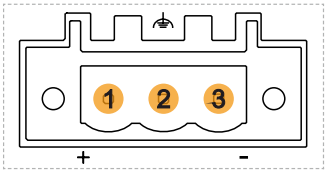
2	Functional ground	
3	-	
• Reverse polarity protection • 3-pin • Male		
Electrical properties		
Nominal voltage		24 VDC ±25%, SELV[1)]
Nominal current		Max. 3.5 A
Overvoltage category per EN 61131-2		II
Inrush current		Typ. 6 A, max. 10 A for < 300 µs
Galvanic isolation		Yes
Uninterruptible power supply		No

1) IEC 61010-2-201 requirements must be observed.

4.1.4.3 Grounding

Caution!

The functional ground (power supply pin 2 and ground connection) must be connected to the central grounding point (e.g. control cabinet or system) via the shortest possible path with the lowest possible resistance and with the largest possible wire cross section. This type of grounding is mandatory for proper functionality.

For example, a copper strip must be attached to the ground connection at a central grounding point of the control cabinet or system in which the device is installed. The wire cross section should be as large as possible (at least 2.5 mm²).

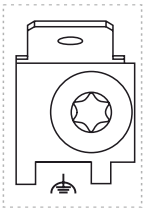

4.1.4.4 Ethernet interfaces

The Ethernet controller is routed externally via the system unit.

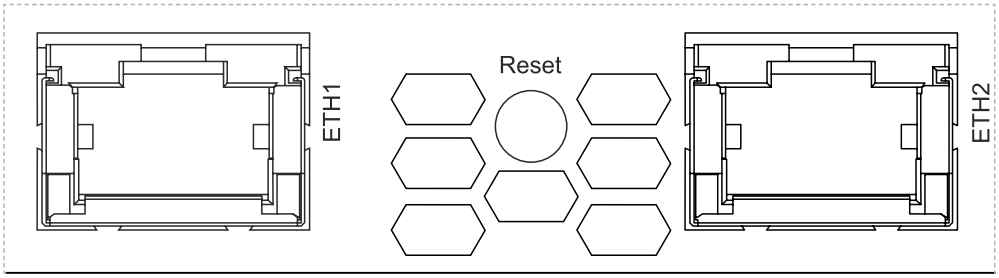

ETH1, ETH2			
Variant	RJ45, female		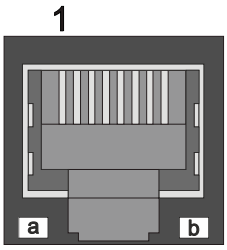
Controller	Intel I210		
Wiring	S/STP (Cat 5e)		
Transfer rate	10/100/1000 Mbit/s[1)]		
Cable length	Max. 100 m (min. Cat 5e)		
LED "Speed" (b)	**On**	**Off**	
Yellow	100 Mbit/s	10 Mbit/s[2)]	
Green	1000 Mbit/s	-	
LED "Link" (a)	**On**	**Active**	
Green	Link (a connection to an Ethernet network exists)	Blinking (data being transferred)	

1) Switching takes place automatically.
2) The 10 Mbit/s transfer rate / connection is only available if LED "Link" is active at the same time.

Driver support

A special driver is required to operate the Ethernet controller. Drivers for approved operating systems are available for download in the Downloads section of the B&R website (www.br-automation.com).

Information:

Necessary drivers must be downloaded from the B&R website, not from manufacturer websites.

4.1.4.5 USB interfaces

The Panel PC is equipped with a Universal Serial Bus 3.0 (USB 3.0) host controller with several USB ports, of which one USB 3.0 interface and one USB 2.0 interface are routed externally and freely available to the user.

Warning!

USB peripheral devices can be connected to the USB interfaces. Due to the variety of USB devices available on the market, B&R cannot guarantee their functionality. The functionality of USB devices available from B&R is ensured.

Caution!

Due to the general PC specification, this interface must be handled with the utmost care with regard to EMC, cable routing, etc.

Driver support

A special driver is necessary to operate the USB 3.0 host controller with multiple USB ports. Drivers for approved operating systems are available for download in the Downloads section of the B&R website (www.br-automation.com).

Information:

Necessary drivers must be downloaded from the B&R website, not from manufacturer websites.

USB1 and USB2			
Standard			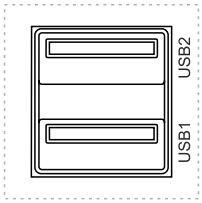
	USB1	USB 3.0	
	USB2	USB 2.0	
Variant		Type A, female	
Transfer rate		Low speed (1.5 Mbit/s)	
		Full speed (12 Mbit/s)	
		High speed (480 Mbit/s)	
		SuperSpeed (5 Gbit/s)[1]	
Current-carrying capacity[2]		Max. 1 A per connection	
Cable length			
	USB 2.0	Max. 5 m (without hub)	
	USB 3.0	Max. 3 m (without hub)	

1) Compatibility with SuperSpeed depends on the operating system used and is only possible with USB 3.0.
2) Each USB interface is protected by a maintenance-free "USB current-limiting switch" (max. 1 A).

USB interface on mounting unit

For details about the USB interfaces of the mounting units, see section "Mounting units" on page 101.

Front USB interface

For details about the USB interfaces of the panels with expansion unit, see section "Expansion units" on page 153.

USB hub interfaces

2-port USB hub 5ACCUSB2.0002-000 provides up to 2 additional USB interfaces for the Panel PC 2100. For additional information, see section "USB hub" on page 279.

4.1.4.6 CFast slot

The Panel PC offers an easy-to-access CFast slot so that a CFast card can also be used as a removable storage medium for transferring data or performing upgrades.

This CFast slot is internally connected to the chipset and implemented in version SATA II (SATA 3.0 Gbit/s).

Information:

5CFAST.0xxx-00 CFast cards are only permitted to be operated in the xPC2100 with revision E0 or later.

CFast slot	
Connection	SATA 0
Order number	**Short description**
	CFast cards
5CFAST.2048-00	CFast 2 GB SLC
5CFAST.4096-00	CFast 4 GB SLC
5CFAST.8192-00	CFast 8 GB SLC
5CFAST.016G-00	CFast 16 GB SLC
5CFAST.032G-00	CFast 32 GB SLC
5CFAST.032G-10	CFast 32 GB MLC
5CFAST.064G-10	CFast 64 GB MLC
5CFAST.128G-10	CFast 128 GB MLC
5CFAST.256G-10	CFast 256 GB MLC

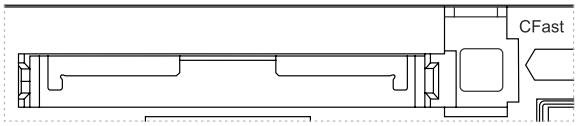

Warning!

CFast cards are only permitted to be inserted and removed in a voltage-free state!

4.1.4.7 Power and reset buttons

Both buttons can be pressed without any tools.

Description
Power button
The power button offers full ATX power supply support and has various configurable functions. • **Short press:** Switches the PC on or off or performs the action configured in the operating system when pressing the power button (shutdown, sleep, etc.). • **Long press (approx. 4 s)**: The ATX power supply switches off the PC without shutting it down. Pressing the power button does not reset the MTCX processor.
Reset button
Pressing the reset button triggers a hardware/PCI reset. The PC is restarted. During a reset, the MTCX processor is not reset.

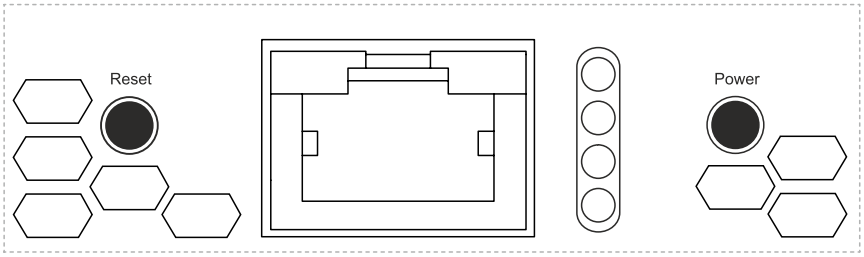

Warning!

Switching off the power without shutting down or resetting the system can result in data loss!

4.1.4.8 LED status indicators

Assignment	LED	Color	Status	Explanation	LED status indicators[1]
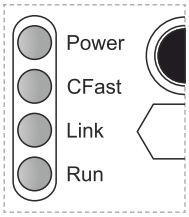	**Power**	Green	On	Power supply OK	
		Red	On	The system is in power saving mode (standby).[1]	
		Red-Green	Blinking	Faulty or incomplete BIOS, MTCX or I/O FPGA update, power supply OK	
				Faulty or incomplete BIOS, MTCX or I/O FPGA update, power saving mode (standby)	
				Information: **An update must be performed again.**	
	CFast	Yellow	On	Indicates CFast access	
	Link	Reserved			
	Run	Green	Blinking	Automation Runtime is starting up. Controlled by Automation Runtime (ARemb and ARwin).	
		Green	On	Application running Controlled by Automation Runtime (ARemb and ARwin).	
		Red	On	Application in SERVICE mode Controlled by Automation Runtime (ARemb and ARwin).	
		Orange	Blinking	A license violation has occurred.	

1) Two columns form 1 interval of 500 ms each.
2) S5: Soft-off
S4: Hibernate (suspend-to-disk)

4.1.4.9 IF option slot(IF1, IFx)

Panel PC system units have 1 slot for an interface option.

The following table lists the interface options that can be operated in the IF option slot.

IF option IF1, IFx slot		
Model number	**Interface option - Short description**	
5ACCIF01.FPCC-000	Interface card - 2x CAN interfaces - 1x X2X Link interface - 1x POWERLINK interface - 512 kB nvSRAM - For APC2100/PPC2100 and APC2200/PPC2200	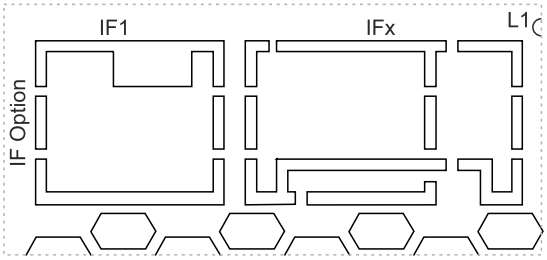
5ACCIF01.FPCS-000	Interface card - 1x RS485 interface - 1x CAN interface - 1x POWERLINK interface - 32 kB FRAM - For APC2100/PPC2100 and APC2200/PPC2200	
5ACCIF01.FPLK-000	Interface card - 2x POWERLINK interfaces - 512 kB nvSRAM - For APC2100/PPC2100 and APC2200/PPC2200	
5ACCIF01.FPLS-000	Interface card - 1x RS232 interface - 1x POWERLINK interface - 32 kB FRAM - For APC2100/PPC2100 and APC2200/PPC2200	
5ACCIF01.FPLS-001	Interface card - 1x RS232 interface - 1x POWERLINK interface - 512 kB nvSRAM - For APC2100/PPC2100 and APC2200/PPC2200	
5ACCIF01.FPSC-000	Interface card - 1x RS232 interface - 1x CAN interface - 1x POWERLINK interface - 32 kB FRAM - For APC2100/PPC2100 and APC2200/PPC2200	
5ACCIF01.FPSC-001	Interface card - 1x RS232 interface - 1x CAN interface - 1x X2X Link interface - 1x POWERLINK interface - 512 kB nvSRAM - For APC2100/PPC2100 and APC2200/PPC2200	
5ACCIF01.FSS0-000	Interface card - 2x RS422/RS485 interface - For APC2100/PPC2100 and APC2200/PPC2200	
5ACCIF01.ICAN-000	Interface card - 1x CAN interface - For APC2100/PPC2100 and APC2200/PPC2200	

Information:

Interface options can only be installed and replaced at the B&R factory.

4.1.5 Equipping panels with expansion units

Expansion options can be installed on AP5230 panels. There are two variants of expansion options:

- Expansion cover
- Expansion unit with operating elements

Expansion covers (5ACCKP00.xxxx-000)

Expansion covers are not equipped by B&R with operating elements. Depending on the variant, 7 to 14 cutouts are available to be equipped with operating elements by the user.

Expansion units with operating elements (5ACCKP0x.xxxx-000)

Expansion units with operating elements are equipped with a USB interface on the front, green and red pushbuttons, selector switch or blue pushbutton, key switch and emergency stop device or an RFID interface (see "Expansion units" on page 153).

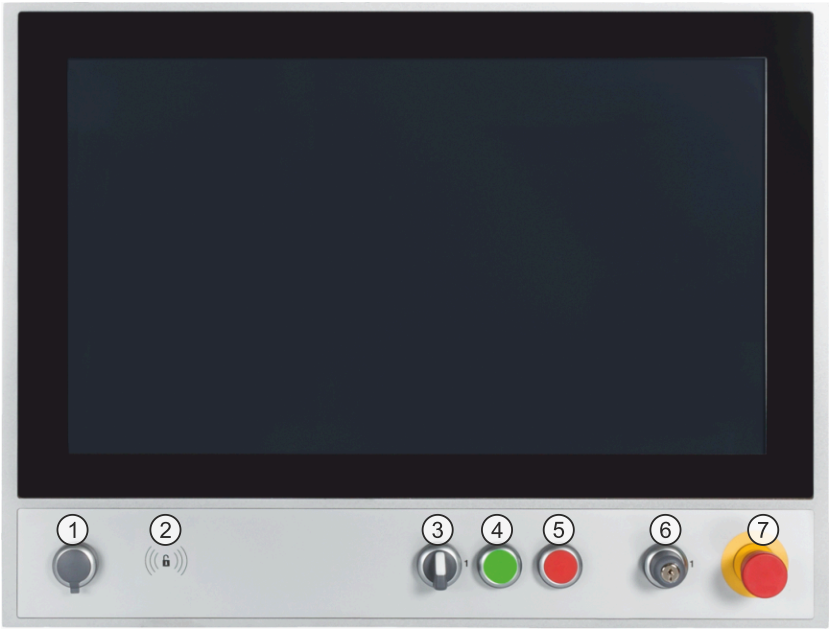

Legend			
1	Front USB	2	RFID interface (5ACCKP03.xxxx-000 and 5ACCKP05.xxxx-000)
3	Selector switches (5ACCKP01.xxxx-000 and 5ACCKP03.xxxx-000) Blue pushbuttons (5ACCKP04.xxxx-000 and 5ACCKP05.xxxx-000)	4	Green pushbutton
5	Red pushbutton	6	Key switch
7	Emergency stop	-	

4.1.5.1 Button/Switching elements

Button/Switch	Actuating element used	Switching element
Selector switch	"Selector switch RAFIX 22 FS+, 1.30.272.102/2200" on page 295	"Switching element RAFIX 22 FS universal, 1.20.126.005/0000" on page 296
Blue pushbutton	"Pushbutton RAFIX 22 FS+, 1.30.270.021/2600" on page 295	"Switching element RAFIX 22 FS universal, 1.20.126.005/0000" on page 296
Green pushbutton	"Pushbutton RAFIX 22 FS+, 1.30.270.021/2500" on page 295	"Switching element RAFIX 22 FS universal, 1.20.126.005/0000" on page 296
Red pushbutton	"Pushbutton RAFIX 22 FS+, 1.30.270.021/2300" on page 295	"Switching element RAFIX 22 FS universal, 1.20.126.005/0000" on page 296
Key switch	"Key switch RAFIX 22 FS+, 1.30.255.222/0000" on page 296	"Switching element RAFIX 22 FS universal, 1.20.126.005/0000" on page 296
Emergency stop	"Emergency stop RAFIX 22 FS+ "Plus 1", 1.30.273.512/0300" on page 296	"Switching element RAFIX 22 FS+ PCB gold, 1.20.126.414/0000" on page 297

4.1.5.2 USB interface

Panels with expansion options are equipped with a USB 2.0 interface on the front. This is equipped with a protective cover.

Caution!

IP65 protection can only be achieved if the USB protective cover is properly installed.

Warning!

USB peripheral devices can be connected to the USB interfaces. Due to the variety of USB devices available on the market, B&R cannot guarantee their functionality. The functionality of USB devices available from B&R is ensured.

Caution!

Due to the general PC specification, this interface must be handled with the utmost care with regard to EMC, cable routing, etc.

Front USB

The front USB interface is available to the user for service purposes.
For a more detailed description, see "USB interface" on page 156.

4.1.5.3 B&R wireless assembly

B&R wireless assembly RFM-2-NF of 5ACCKP03.xxxx-000 or 5ACCK05.xxxx-000 expansion units consists of the following wireless module:

- SRD (RFID/NFC) module TWN4 MultiTech Nano from Elatec with circuit board antenna from B&R.

The B&R wireless assembly must be connected internally to the system using the USB 2.0 cable.

4.1.5.3.1 Drivers, software and documentation

Drivers, software tools and documentation for approved operating systems are available for download in the Downloads section of the B&R website (www.br-automation.com). The software packages for the TWN4 MultiTech Nano with the TWN4 Simple Protocol must be used.

4.1.5.4 Button/Switch interface

The button/switch interface can be used to externally wire button and switching elements. It is located inside the panel on the expansion unit. To access, the cover on the back for the expansion option must be removed first (see "Installing the expansion unit/cover" on page 190). Button and switching elements are wired using the 9-pin terminal strip and a screwdriver.

Description				Figure
Pin	Name	Button/Switch	Contact	
1	T_Select	Selector switch	(normally open contact)	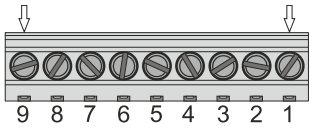
	T_Blue	Blue pushbutton	(normally open contact)	
2	T_Green	Green pushbutton	(normally open contact)	
3	T_Red	Red pushbutton	(normally open contact)	
4	T_Key	Key switch	(normally open contact)	
5	V_Button		Reference potential for pins 1-4	
6	NH22	Emergency stop	Normally closed contact pair 1 emergency stop	
7	NH21	Emergency stop	Normally closed contact pair 1 emergency stop	
8	NH12	Emergency stop	Normally closed contact pair 2 emergency stop	
9	NH11	Emergency stop	Normally closed contact pair 2 emergency stop	

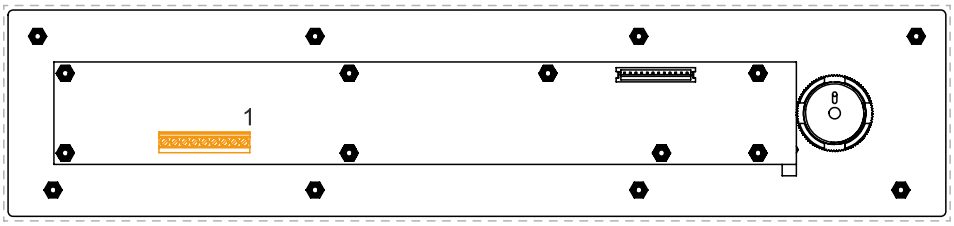

4.1.5.5 Button, switch and LED configuration

Each key and LED can be individually configured and adapted to the application. Various tools from B&R are available for configuration:

- B&R Key Editor for Windows operating systems
- B&R KCF Editor for Windows operating systems
- Visual Components

Keys and LEDs from each device are processed by the matrix controller in a bit string of 128 bits each. The positions of the keys and LEDs in the matrix are displayed as hardware numbers and can be read directly on the target system using B&R tools and the ADI Control Center.

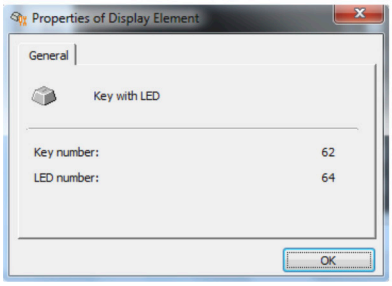

B&R Key Editor

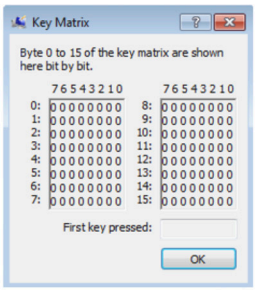

ADI Control Center

Keys and LEDs in the matrix:

- Hardware numbers of keys are specified in the following with black indexes.
- Hardware numbers of LEDs are specified in the following with blue indexes.

Illustration examples:

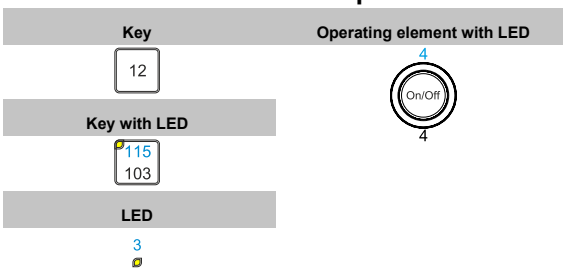

Configuration with mounted expansion unit 5ACCKP0x.xxxx-000 for panels:

- 5AP5230.156x-000
- 5AP5230.185x-000
- 5AP5230.215C-000
- 5AP5230.215I-000
- 5AP5230.240C-000

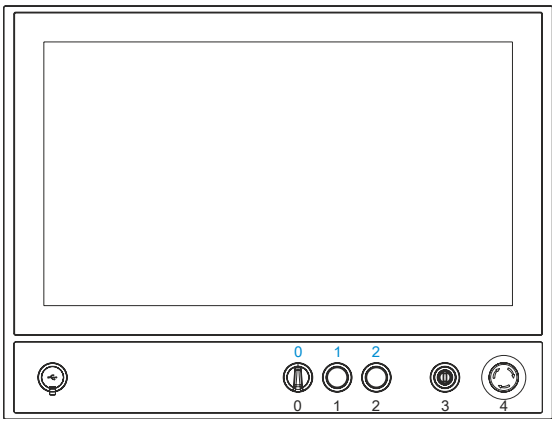

4.2 Individual components

4.2.1 System units

4.2.1.1 5PPC2100.BYxx-002

4.2.1.1.1 General information

PPC2100 swing arm device system units consist of a CPU board, main memory, housing and heat sink. It includes all interfaces; in addition, an interface option can be installed. The main memory is permanently soldered to the CPU board and cannot be replaced or upgraded.

- Intel Atom processors
- Intel Bay Trail platform
- DDR3 memory
- Intel HD Graphics
- 1 CFast slot
- Slot for 1 interface option

4.2.1.1.2 Order data

Order number	Short description	Figure
	System units	
5PPC2100.BY01-002	PPC2100 system unit - Intel Atom E3815 1.46 GHz - Single core - 1 GB SDRAM - For Automation Panel 5000	
5PPC2100.BY11-002	PPC2100 system unit - Intel Atom E3825 1.33 GHz - Dual core - 1 GB SDRAM - For Automation Panel 5000	
5PPC2100.BY22-002	PPC2100 system unit - Intel Atom E3826 1.46 GHz - Dual core - 2 GB SDRAM - For Automation Panel 5000	
5PPC2100.BY34-002	PPC2100 system unit - Intel Atom E3827 1.75 GHz - Dual core - 4 GB SDRAM - For Automation Panel 5000	
5PPC2100.BY44-002	PPC2100 system unit - Intel Atom E3845 1.91 GHz - Quad core - 4 GB SDRAM - For Automation Panel 5000	
5PPC2100.BY48-002	PPC2100 system unit - Intel Atom E3845 1.91 GHz - Quad core - 8 GB SDRAM - For Automation Panel 5000	
	Required accessories	
	CFast cards	
5CFAST.016G-00	CFast 16 GB SLC	
5CFAST.032G-00	CFast 32 GB SLC	
5CFAST.032G-10	CFast 32 GB MLC	
5CFAST.064G-10	CFast 64 GB MLC	
5CFAST.128G-10	CFast 128 GB MLC	
5CFAST.256G-10	CFast 256 GB MLC	
	Heat pipe	
5ACCHP00.0000-000	AP5000 heat pipe - For PPC2100 (5PPC2100.BYxx-002) - For swing arm mounting unit	
5ACCHP00.0004-000	AP5000 heat pipe - For PPC2100 (5PPC2100.BYxx-002) - For VESA mounting unit	
	Optional accessories	
	Interface options	
5ACCIF01.FPCC-000	Interface card - 2x CAN interfaces - 1x X2X Link interface - 1x POWERLINK interface - 512 kB nvSRAM - For APC2100/PPC2100/APC2200/PPC2200 - Only available with a new device	
5ACCIF01.FPCS-000	Interface card - 1x RS485 interface - 1x CAN interface - 1x POWERLINK interface - 32 kB FRAM - For APC2100/PPC2100/APC2200/PPC2200 - Only available with a new device	
5ACCIF01.FPLK-000	Interface card - 1x POWERLINK interface - Integrated 2-port hub - 512 kB nvSRAM - For APC2100/PPC2100/APC2200/PPC2200 - Only available with a new device	
5ACCIF01.FPLS-000	Interface card - 1x RS232 interface - 1x POWERLINK interface - 32 kB FRAM - For APC2100/PPC2100/APC2200/PPC2200 - Only available with a new device	
5ACCIF01.FPLS-001	Interface card - 1x RS232 interface - 1x POWERLINK interface - 512 kB nvSRAM - For APC2100/PPC2100/APC2200/PPC2200 - Only available with a new device	
5ACCIF01.FPSC-000	Interface card - 1x RS232 interface - 1x CAN interface - 1x POWERLINK interface - 32 kB FRAM - For APC2100/PPC2100/APC2200/PPC2200 - Only available with a new device	
5ACCIF01.FPSC-001	Interface card - 1x RS232 interface - 1x CAN interface - 1x X2X Link Interface - 1x POWERLINK interface - 512 kB nvSRAM - For APC2100/PPC2100/APC2200/PPC2200 - Only available with a new device	
5ACCIF01.FSS0-000	Interface card - 2x RS422/RS485 interface - For APC2100/PPC2100/APC2200/PPC2200 - Only available with a new device	
5ACCIF01.ICAN-000	Interface card - 1x CAN interface - For APC2100/PPC2100/APC2200/PPC2200 - Only available with a new device	
5ACCIF01.IS00-000	1x RS232 Schnittstelle Kompatibel mit APC2100/PPC2100 und APC2200/PPC2200	

4.2.1.1.3 Technical data

Information:

The following specified characteristic data, features and limit values are only valid for these individual components and may differ from those of the complete system. The data specified for the complete system applies to the complete system in which this individual component is used, for example.

Order number	5PPC2100. BY01-002	5PPC2100. BY11-002	5PPC2100. BY22-002	5PPC2100. BY34-002	5PPC2100. BY44-002	5PPC2100. BY48-002
General information						
LEDs	Power, CFast, Link, Run					
B&R ID code	EAD3	EAD4	EAD5	EAD6	EAD7	ED0C
Cooling	Passive via housing					
Power button	Yes					
Reset button	Yes					
Buzzer	No					
Certifications						
CE	Yes					
UL	cULus E115267 Industrial control equipment					
EAC	Product family certification					
Controller						
Bootloader	UEFI BIOS					
Processor						
Type	Intel Atom E3815	Intel Atom E3825	Intel Atom E3826	Intel Atom E3827	Intel Atom E3845	Intel Atom E3845
Clock frequency	1460 MHz	1330 MHz	1460 MHz	1750 MHz	1910 MHz	1910 MHz
Number of cores	1	2	2	2	4	4
Architecture	22 nm					
Thermal design power (TDP)	5 W	6 W	7 W	8 W	10 W	10 W
L2 cache	512 kB	1 MB	1 MB	1 MB	2 MB	2 MB
Intel 64 architecture	Yes					
Intel Hyper-Threading Technology	No					
Intel vPro Technology	No					
Intel Virtualization Technology (VT-x)	Yes					
Intel Virtualization Technology for Directed I/O (VT-d)	No					
Enhanced Intel SpeedStep Technology	Yes					
Chipset	Intel Bay Trail					
Real-time clock						
Accuracy	At 25°C: Typ. 12 ppm (1 second) per day [1]					
Self-discharge time [2]	Typ. approx. 400 h Min. approx. 200 h					
Battery-backed	No					
Power failure logic						
Controller	MTCX [3]					
Buffer time	10 ms					
Memory						
Type	DDR3 SDRAM					
Memory size	1 GB	1 GB	2 GB	4 GB	4 GB	8 GB
Velocity	DDR3L-1067	DDR3L-1067	DDR3L-1067	DDR3L-1333	DDR3L-1333	DDR3L-1333
Memory interface width	Single channel	Single channel	Single channel	Single channel	Single channel	Dual channel
Removable	No					
Graphics						
Controller	Intel HD Graphics					
Max. dynamic graphics frequency	400 MHz	533 MHz	667 MHz	792 MHz	792 MHz	792 MHz
Color depth	Max. 32-bit					
DirectX support	11					
OpenGL support	4.0					
Power management	ACPI 4.0					
Interfaces						
CFast slot						
Quantity	1					
Type	SATA II (SATA 3.0 Gbit/s)					
USB						
Quantity	2					
Type	1x USB 3.0 1x USB 2.0					
Variant	Type A					
Transfer rate	Low speed (1.5 Mbit/s), full speed (12 Mbit/s), high speed (480 Mbit/s) to SuperSpeed (5 Gbit/s) [4]					
Current-carrying capacity	Max. 1 A per connection					

Order number	5PPC2100. BY01-002	5PPC2100. BY11-002	5PPC2100. BY22-002	5PPC2100. BY34-002	5PPC2100. BY44-002	5PPC2100. BY48-002
Ethernet						
Quantity	2					
Variant	RJ45, shielded					
Transfer rate	10/100/1000 Mbit/s					
Max. baud rate	1 Gbit/s					
Slots						
Interface option [5]	1					
Electrical properties						
Nominal voltage	24 VDC ±25% [6]					
Nominal current	3.5 A					
Inrush current	Typ. 6 A, max. 10 A for < 300 µs					
Overvoltage category per EN 61131-2	II					
Galvanic isolation	Yes					
Operating conditions						
Pollution degree per EN 61131-2	Pollution degree 2					
Degree of protection per EN 60529	Back: IP20 (front: depends on the panel used) [7]					
Ambient conditions						
Elevation						
Operation	Max. 3000 m (component-dependent) [8]					
Mechanical properties						
Dimensions						
Width	190 mm					
Height	115 mm					
Depth	29.7 mm					
Weight	577 g					

1) At max. specified ambient temperature: Typ. 58 ppm (5 seconds) - worst case 220 ppm (19 seconds).
2) To achieve the specified values for the self-discharge time, the product must be supplied with power for min. 8 hours.
3) Maintenance Controller Extended
4) The SuperSpeed transfer rate (5 Gbit/s) is only possible with USB 3.0.
5) The interface option cannot be replaced.
6) IEC 61010-2-201 requirements must be observed.
7) Only if all interface covers are installed.
The degree of protection of the complete system depends on the mounting unit used as well as the panel.
8) The maximum ambient temperature is typically derated 1°C per 1000 meters starting at 500 m above sea level.

4.2.2 Panels

4.2.2.1 5AP5120.1505-000

4.2.2.1.1 General information

- 15.0" TFT XGA color display
- Single-touch (analog resistive)
- Flexible swing arm mounting or VESA
- IP65 protection with mounting unit 5ACCMA00.000x-000
- IP54 protection with mounting unit 5ACCMA00.010x-000
- IP20 protection with mounting unit 5ACCMA01.0100-000

4.2.2.1.2 Order data

Order number	Short description	Figure
	Panels	
5AP5120.1505-000	Automation Panel 15.0" XGA TFT - 1024 x 768 pixels (4:3) - Single-touch (analog resistive) - Swing arm mounting - Landscape format - For PPC2100 / PPC2200 / link modules	
	Optional accessories	
	Flanges	
5ACCFL00.0000-000	AP5000 flange - Swing arm rotary flange - For swing arm mounting unit	
5ACCFL00.0100-000	AP5000 flange - Swivel-tilt flange for swing arm - For swing arm mounting unit	
5ACCFL00.0200-000	AP5000 flange - Swing arm flange adapter - For Rittal - For swing arm mounting unit	
	Handles	
5ACCHD00.1505-000	AP5000 swing arm handles - For panel 5AP5120.1505-000	
	Mounting units	
5ACCMA00.0000-000	AP5000 swing arm mounting unit	
5ACCMA00.0001-000	AP5000 swing arm mounting unit - 1x rear USB interface	
5ACCMA00.0002-000	AP5000 swing arm mounting unit - 2x rear USB interface	
5ACCMA00.0100-000	HMI mounting unit VESA IP54 - Leak tightness is only provided with suitable cable grommets.	
5ACCMA00.0101-000	HMI mounting unit VESA IP54 w/USB - Leak tightness is only provided with suitable cable grommets.	
5ACCMA01.0100-000	AP5000 VESA mounting unit IP10/IP20 - IP20 with 5AP5120.*-000 - IP10 with 5AP5130.*-000, 5AP5230.*-000	

4.2.2.1.3 Technical data

Information:

The following specified characteristic data, features and limit values are only valid for these individual components and may differ from those of the complete system. The data specified for the complete system applies to the complete system in which this individual component is used, for example.

Order number	5AP5120.1505-000
General information	
B&R ID code	0xE9CB
Certifications	
CE	Yes
UL	cULus E115267 Industrial control equipment
EAC	Yes
Display	
Type	TFT color
Diagonal	15.0"
Colors	16.7 million
Resolution	XGA, 1024 x 768 pixels
Contrast	700:1
Viewing angles	
Horizontal	Direction R = 80° / Direction L = 80°
Vertical	Direction U = 70° / Direction D = 70°
Backlight	
Type	LED
Brightness (dimmable)	Typ. 20 to 400 cd/m²
Half-brightness time [1)]	50,000 h

Order number	5AP5120.1505-000
Touch screen	
Technology	Analog, resistive
Controller	B&R, serial, 12-bit
Transmittance	81% ±3%
Operating conditions	
Pollution degree per EN 61131-2	Pollution degree 2
Degree of protection per EN 60529	IP65 with mounting unit 5ACCMA00.000x-000 IP54 with mounting unit 5ACCMA00.010x-000
Degree of protection per UL 50	Type 4X indoor with mounting unit 5ACCMA00.000x-000 Type 1 with mounting unit 5ACCMA00.010x-000
Mechanical properties	
Housing	
Material	Aluminum, coated
Coating	White aluminum
Front	
Frame	Aluminum, coated
Panel overlay	
Material	Polyester
Dark border color around display	RAL 7024
Dimensions	
Width	389 mm
Height	299 mm
Weight	5200 g

1) At 25°C ambient temperature. Reducing the brightness by 50% can increase the half-brightness time by approximately 50%.

4.2.2.1.4 Dimensions

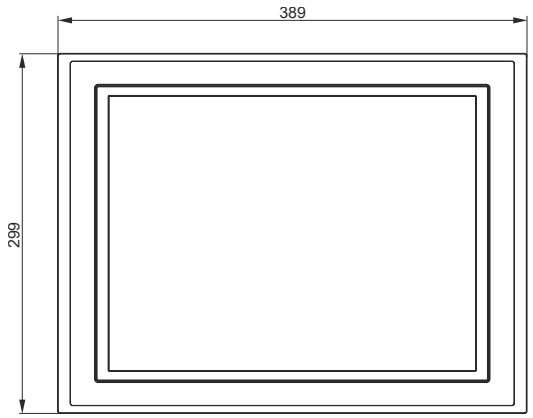

4.2.2.1.5 Temperature/Humidity diagram

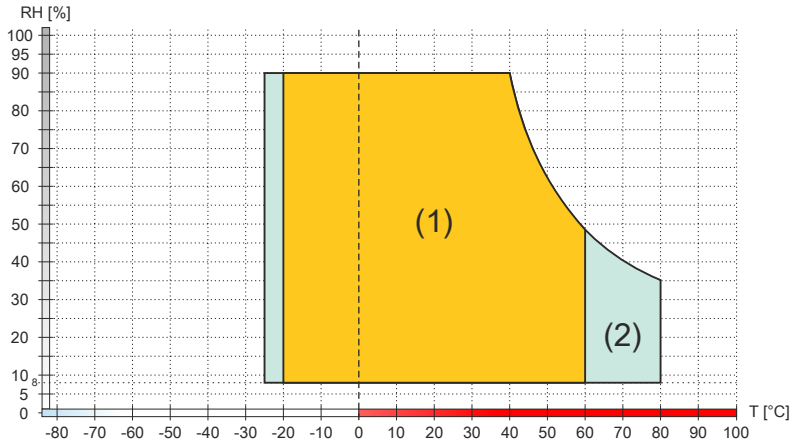

Diagram legend			
(1)	Operation	T [°C]	Temperature in °C
(2)	Storage and transport	RH [%]	Relative humidity (RH) in percent and **non-condensing**

4.2.2.2 5AP5120.1906-000

4.2.2.2.1 General information

- 19.0" TFT SXGA color display
- Single-touch (analog resistive)
- Flexible swing arm mounting or VESA
- IP65 protection with mounting unit 5ACCMA00.000x-000
- IP54 protection with mounting unit 5ACCMA00.010x-000
- IP20 protection with mounting unit 5ACCMA01.0100-000

4.2.2.2.2 Order data

Order number	Short description	Figure
	Panels	
5AP5120.1906-000	Automation Panel 19.0" SXGA TFT - 1280 x 1024 pixels (5:4) - Single-touch (analog resistive) - Swing arm mounting - Landscape format - For PPC2100 / PPC2200 / link modules	
	Optional accessories	
	Flanges	
5ACCFL00.0000-000	AP5000 flange - Swing arm rotary flange - For swing arm mounting unit	
5ACCFL00.0100-000	AP5000 flange - Swivel-tilt flange for swing arm - For swing arm mounting unit	
5ACCFL00.0200-000	AP5000 flange - Swing arm flange adapter - For Rittal - For swing arm mounting unit	
	Handles	
5ACCHD00.1906-000	AP5000 swing arm handles - For panel 5AP5120.1906-000	
	Mounting units	
5ACCMA00.0000-000	AP5000 swing arm mounting unit	
5ACCMA00.0001-000	AP5000 swing arm mounting unit - 1x rear USB interface	
5ACCMA00.0002-000	AP5000 swing arm mounting unit - 2x rear USB interface	
5ACCMA00.0100-000	HMI mounting unit VESA IP54 - Leak tightness is only provided with suitable cable grommets.	
5ACCMA00.0101-000	HMI mounting unit VESA IP54 w/USB - Leak tightness is only provided with suitable cable grommets.	
5ACCMA01.0100-000	AP5000 VESA mounting unit IP10/IP20 - IP20 with 5AP5120.*-000 - IP10 with 5AP5130.*-000, 5AP5230.*-000	

4.2.2.2.3 Technical data

Information:

The following specified characteristic data, features and limit values are only valid for these individual components and may differ from those of the complete system. The data specified for the complete system applies to the complete system in which this individual component is used, for example.

Order number	5AP5120.1906-000
General information	
B&R ID code	0xE9CC
Certifications	
CE	Yes
UL	cULus E115267 Industrial control equipment
EAC	Yes
Display	
Type	TFT color
Diagonal	19.0"
Colors	16.7 million
Resolution	SXGA, 1280 x 1024 pixels
Contrast	1500:1
Viewing angles	
Horizontal	Direction R = 85° / Direction L = 85°
Vertical	Direction U = 85° / Direction D = 85°
Backlight	
Type	LED
Brightness (dimmable)	Typ. 35 to 350 cd/m²
Half-brightness time [1)]	70,000 h
Touch screen	
Technology	Analog, resistive
Controller	B&R, serial, 12-bit
Transmittance	81% ±3%

Order number	5AP5120.1906-000
Operating conditions	
Pollution degree per EN 61131-2	Pollution degree 2
Degree of protection per EN 60529	IP65 with mounting unit 5ACCMA00.000x-000 IP54 with mounting unit 5ACCMA00.010x-000
Degree of protection per UL 50	Type 4X indoor with mounting unit 5ACCMA00.000x-000 Type 1 with mounting unit 5ACCMA00.010x-000
Mechanical properties	
Housing	
Material	Aluminum, coated
Coating	White aluminum
Front	
Frame	Aluminum, coated
Panel overlay	
Material	Polyester
Dark border color around display	RAL 7024
Dimensions	
Width	461.2 mm
Height	372 mm
Weight	7300 g

1) At 25°C ambient temperature. Reducing the brightness by 50% can increase the half-brightness time by approximately 50%.

4.2.2.2.4 Dimensions

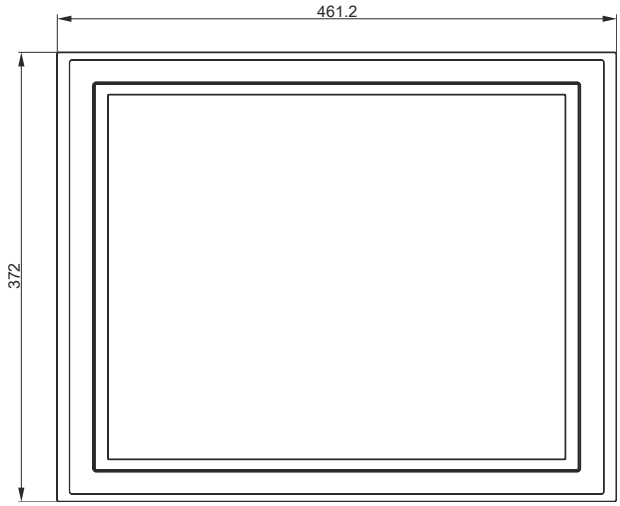

4.2.2.2.5 Temperature/Humidity diagram

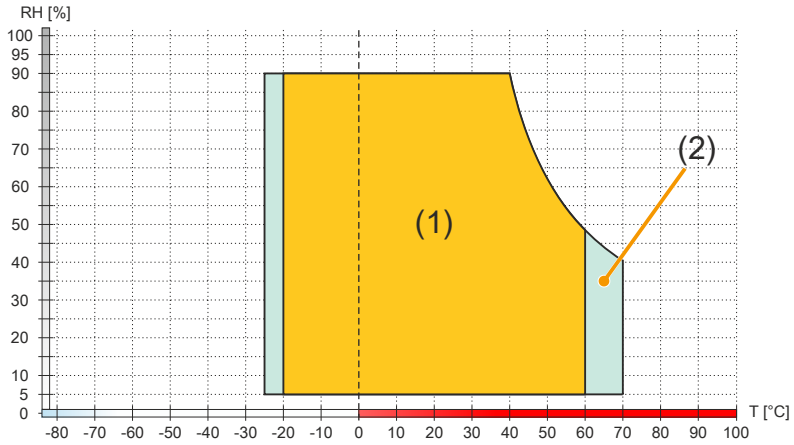

Diagram legend			
(1)	Operation	T [°C]	Temperature in °C
(2)	Storage and transport	RH [%]	Relative humidity (RH) in percent and **non-condensing**

4.2.2.3 5AP5130.156B-000

4.2.2.3.1 General information

- 15.6" TFT HD color display
- Multi-touch (PCT)
- Flexible swing arm mounting or VESA
- IP65 protection with mounting unit 5ACCMA00.000x-000
- IP54 protection with mounting unit 5ACCMA00.010x-000
- IP10 protection with mounting unit 5ACCMA01.0100-000

4.2.2.3.2 Order data

Order number	Short description	Figure
	Panels	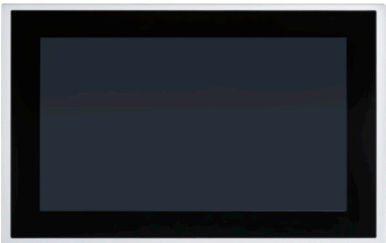
5AP5130.156B-000	Automation Panel 15.6" HD TFT - 1366 x 768 pixels (16:9) - Multi-touch (projected capacitive) - Swing arm mounting - Landscape format - For PPC2100 / PPC2200 / link modules	
	Optional accessories	
	Flanges	
5ACCFL00.0000-000	AP5000 flange - Swing arm rotary flange - For swing arm mounting unit	
5ACCFL00.0100-000	AP5000 flange - Swivel-tilt flange for swing arm - For swing arm mounting unit	
5ACCFL00.0200-000	AP5000 flange - Swing arm flange adapter - For Rittal - For swing arm mounting unit	
	Handles	
5ACCHD00.156B-000	AP5000 swing arm handles - For panel 5AP5130.156B/156C-000	
	Mounting units	
5ACCMA00.0000-000	AP5000 swing arm mounting unit	
5ACCMA00.0001-000	AP5000 swing arm mounting unit - 1x rear USB interface	
5ACCMA00.0002-000	AP5000 swing arm mounting unit - 2x rear USB interface	
5ACCMA00.0100-000	HMI mounting unit VESA IP54 - Leak tightness is only provided with suitable cable grommets.	
5ACCMA00.0101-000	HMI mounting unit VESA IP54 w/USB - Leak tightness is only provided with suitable cable grommets.	
5ACCMA01.0100-000	AP5000 VESA mounting unit IP10/IP20 - IP20 with 5AP5120.*-000 - IP10 with 5AP5130.*-000, 5AP5230.*-000	

4.2.2.3.3 Technical data

Information:

The following specified characteristic data, features and limit values are only valid for these individual components and may differ from those of the complete system. The data specified for the complete system applies to the complete system in which this individual component is used, for example.

Order number	5AP5130.156B-000
General information	
B&R ID code	0xE9C7
Certifications	
CE	Yes
UL	cULus E115267 Industrial control equipment
EAC	Yes
Display	
Type	TFT color
Diagonal	15.6"
Colors	16.7 million
Resolution	HD, 1366 x 768 pixels
Contrast	1000:1
Viewing angles	
Horizontal	Direction R = 85° / Direction L = 85°
Vertical	Direction U = 85° / Direction D = 85°
Backlight	
Type	LED
Brightness (dimmable)	Typ. 40 to 400 cd/m²
Half-brightness time [1)]	70,000 h
Touch screen	
Technology	Projected capacitive touch (PCT)
Transmittance	>90%

Order number	5AP5130.156B-000
Operating conditions	
Pollution degree per EN 61131-2	Pollution degree 2
Degree of protection per EN 60529	IP65 with mounting unit 5ACCMA00.000x-000 IP54 with mounting unit 5ACCMA00.010x-000
Degree of protection per UL 50	Type 4X indoor with mounting unit 5ACCMA00.000x-000 Type 1 with mounting unit 5ACCMA00.010x-000
Mechanical properties	
Housing	
Material	Aluminum, coated
Coating	White aluminum (similar to RAL 9006)
Front	
Frame	Aluminum (similar to RAL 9006), coated
Design	Black
Dimensions	
Width	433 mm
Height	269.5 mm
Weight	4700 g

1) At 25°C ambient temperature. Reducing the brightness by 50% can increase the half-brightness time by approximately 50%.

4.2.2.3.4 Dimensions

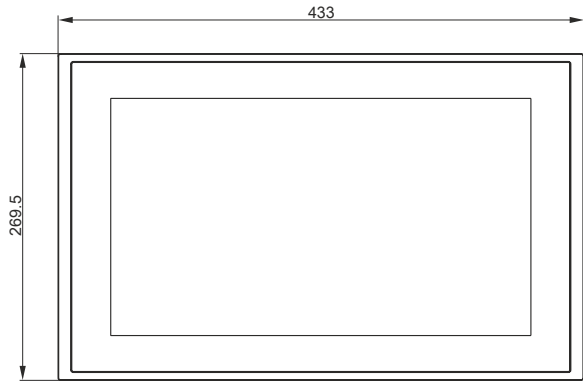

4.2.2.3.5 Temperature/Humidity diagram

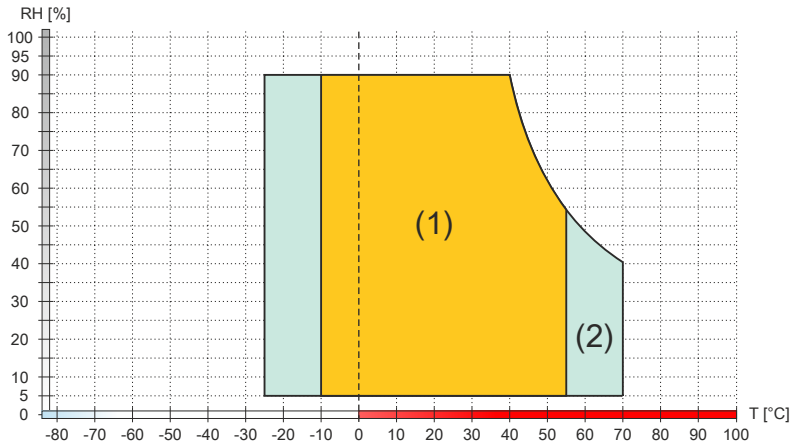

Diagram legend			
(1)	Operation	T [°C]	Temperature in °C
(2)	Storage and transport	RH [%]	Relative humidity (RH) in percent and **non-condensing**

4.2.2.4 5AP5130.156C-000

4.2.2.4.1 General information

- 15.6" TFT FHD color display
- Multi-touch (PCT)
- Flexible swing arm mounting or VESA
- IP65 protection with mounting unit 5ACCMA00.000x-000
- IP54 protection with mounting unit 5ACCMA00.010x-000
- IP10 protection with mounting unit 5ACCMA01.0100-000

4.2.2.4.2 Order data

Order number	Short description	Figure
	Panels	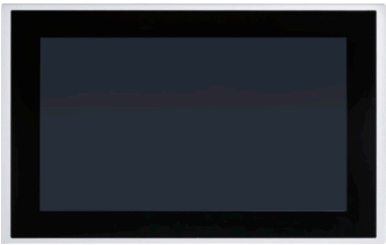
5AP5130.156C-000	Automation Panel 15.6" Full HD TFT - 1920 x 1080 pixels (16:9) - Multi-touch (projected capacitive) - Swing arm mounting - Landscape format - For PPC2100 / PPC2200 / link modules	
	Optional accessories	
	Flanges	
5ACCFL00.0000-000	AP5000 flange - Swing arm rotary flange - For swing arm mounting unit	
5ACCFL00.0100-000	AP5000 flange - Swivel-tilt flange for swing arm - For swing arm mounting unit	
5ACCFL00.0200-000	AP5000 flange - Swing arm flange adapter - For Rittal - For swing arm mounting unit	
	Handles	
5ACCHD00.156B-000	AP5000 swing arm handles - For panel 5AP5130.156B/156C-000	
	Mounting units	
5ACCMA00.0000-000	AP5000 swing arm mounting unit	
5ACCMA00.0001-000	AP5000 swing arm mounting unit - 1x rear USB interface	
5ACCMA00.0002-000	AP5000 swing arm mounting unit - 2x rear USB interface	
5ACCMA00.0100-000	HMI mounting unit VESA IP54 - Leak tightness is only provided with suitable cable grommets.	
5ACCMA00.0101-000	HMI mounting unit VESA IP54 w/USB - Leak tightness is only provided with suitable cable grommets.	
5ACCMA01.0100-000	AP5000 VESA mounting unit IP10/IP20 - IP20 with 5AP5120.*-000 - IP10 with 5AP5130.*-000, 5AP5230.*-000	

4.2.2.4.3 Technical data

Information:

The following specified characteristic data, features and limit values are only valid for these individual components and may differ from those of the complete system. The data specified for the complete system applies to the complete system in which this individual component is used, for example.

Order number	5AP5130.156C-000
General information	
B&R ID code	0XF24A
Certifications	
CE	Yes
UL	cULus E115267 Industrial control equipment
EAC	Yes
Display	
Type	TFT color
Diagonal	15.6"
Colors	16.7 million
Resolution	FHD, 1920 x 1080
Contrast	Starting with hardware revision F0: 800:1 Up to hardware revision E0: 1500:1
Viewing angles	
Horizontal	Direction R = 85° / Direction L = 85°
Vertical	Direction U = 85° / Direction D = 85°
Backlight	
Type	LED
Brightness (dimmable)	Starting with hardware revision F0: Typ. 40 to 450 cd/m² Up to hardware revision E0: Typ. 40 to 400 cd/m²
Half-brightness time	Starting with hardware revision F0: ≥50,000 h Up to hardware revision E0: 70,000 h [1)]

Order number	5AP5130.156C-000
Touch screen	
Technology	Projected capacitive touch (PCT)
Transmittance	>90%
Operating conditions	
Pollution degree per EN 61131-2	Pollution degree 2
Degree of protection per EN 60529	IP65 with mounting unit 5ACCMA00.000x-000 IP54 with mounting unit 5ACCMA00.010x-000
Degree of protection per UL 50	Type 4X indoor with mounting unit 5ACCMA00.000x-000 Type 1 with mounting unit 5ACCMA00.010x-000
Mechanical properties	
Housing	
Material	Aluminum, coated
Coating	White aluminum (similar to RAL 9006)
Front	
Frame	Aluminum (similar to RAL 9006), coated
Design	Black
Dimensions	
Width	433 mm
Height	269.5 mm
Weight	4700 g

1) At 25°C ambient temperature. Reducing the brightness by 50% can increase the half-brightness time by approximately 50%.

4.2.2.4.4 Dimensions

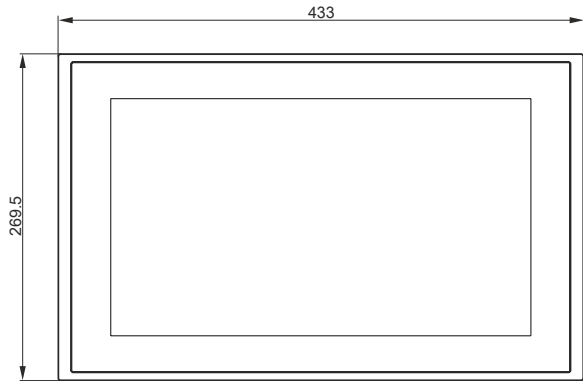

4.2.2.4.5 Temperature/Humidity diagram

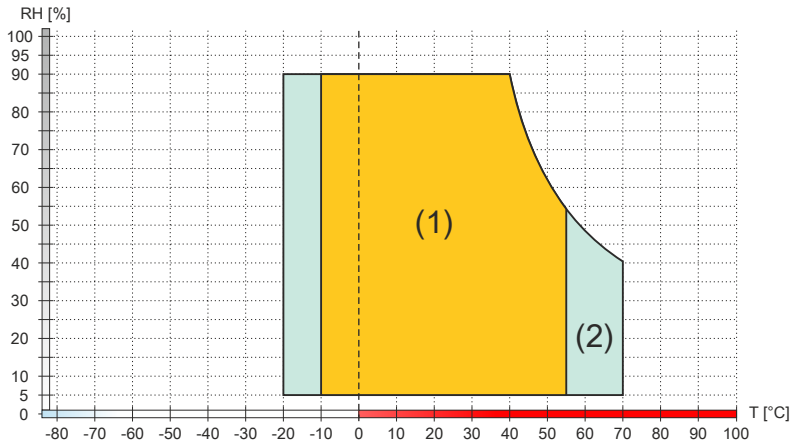

Diagram legend			
(1)	Operation	T [°C]	Temperature in °C
(2)	Storage and transport	RH [%]	Relative humidity (RH) in percent and **non-condensing**

4.2.2.5 5AP5130.185B-000

4.2.2.5.1 General information

- 18.5" TFT HD color display
- Multi-touch (PCT)
- Flexible swing arm mounting or VESA
- IP65 protection with mounting unit 5ACCMA00.000x-000
- IP54 protection with mounting unit 5ACCMA00.010x-000
- IP10 protection with mounting unit 5ACCMA01.0100-000

4.2.2.5.2 Order data

Order number	Short description	Figure
	Panels	
5AP5130.185B-000	Automation Panel 18.5" HD TFT - 1366 x 768 pixels (16:9) - Multi-touch (projected capacitive) - Swing arm mounting - Landscape format - For PPC2100 / PPC2200 / link modules	
	Optional accessories	
	Flanges	
5ACCFL00.0000-000	AP5000 flange - Swing arm rotary flange - For swing arm mounting unit	
5ACCFL00.0100-000	AP5000 flange - Swivel-tilt flange for swing arm - For swing arm mounting unit	
5ACCFL00.0200-000	AP5000 flange - Swing arm flange adapter - For Rittal - For swing arm mounting unit	
	Handles	
5ACCHD00.185B-000	AP5000 swing arm handles - For panel 5AP5130.185B/185C-000	
	Mounting units	
5ACCMA00.0000-000	AP5000 swing arm mounting unit	
5ACCMA00.0001-000	AP5000 swing arm mounting unit - 1x rear USB interface	
5ACCMA00.0002-000	AP5000 swing arm mounting unit - 2x rear USB interface	
5ACCMA00.0100-000	HMI mounting unit VESA IP54 - Leak tightness is only provided with suitable cable grommets.	
5ACCMA00.0101-000	HMI mounting unit VESA IP54 w/USB - Leak tightness is only provided with suitable cable grommets.	
5ACCMA01.0100-000	AP5000 VESA mounting unit IP10/IP20 - IP20 with 5AP5120.*-000 - IP10 with 5AP5130.*-000, 5AP5230.*-000	

4.2.2.5.3 Technical data

Information:

The following specified characteristic data, features and limit values are only valid for these individual components and may differ from those of the complete system. The data specified for the complete system applies to the complete system in which this individual component is used, for example.

Order number	5AP5130.185B-000
General information	
B&R ID code	0xE9C8
Certifications	
CE	Yes
UL	cULus E115267 Industrial control equipment
EAC	Yes
Display	
Type	TFT color
Diagonal	18.5"
Colors	16.7 million
Resolution	HD, 1366 x 768 pixels
Contrast	1000:1
Viewing angles	
Horizontal	Direction R = 85° / Direction L = 85°
Vertical	Direction U = 80° / Direction D = 80°
Backlight	
Type	LED
Brightness (dimmable)	Typ. 15 to 300 cd/m²
Half-brightness time [1)]	50,000 h
Touch screen	
Technology	Projected capacitive touch (PCT)
Transmittance	>90%

Order number	5AP5130.185B-000
Operating conditions	
Pollution degree per EN 61131-2	Pollution degree 2
Degree of protection per EN 60529	IP65 with mounting unit 5ACCMA00.000x-000 IP54 with mounting unit 5ACCMA00.010x-000
Degree of protection per UL 50	Type 4X indoor with mounting unit 5ACCMA00.000x-000 Type 1 with mounting unit 5ACCMA00.010x-000
Mechanical properties	
Housing	
Material	Aluminum, coated
Coating	White aluminum (similar to RAL 9006)
Front	
Frame	Aluminum (similar to RAL 9006), coated
Design	Black
Dimensions	
Width	494 mm
Height	306 mm
Weight	6700 g

1) At 25°C ambient temperature. Reducing the brightness by 50% can increase the half-brightness time by approximately 50%.

4.2.2.5.4 Dimensions

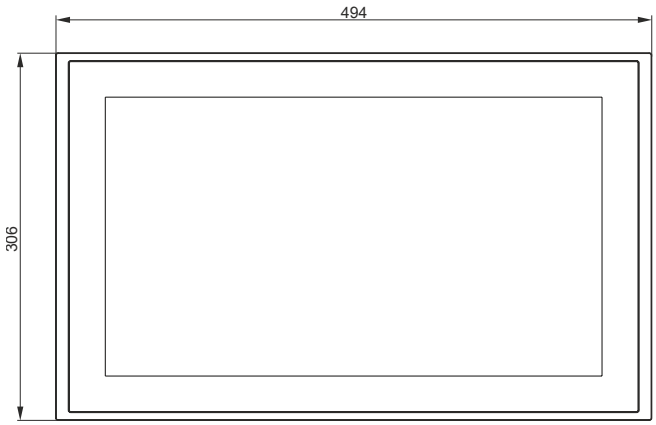

4.2.2.5.5 Temperature/Humidity diagram

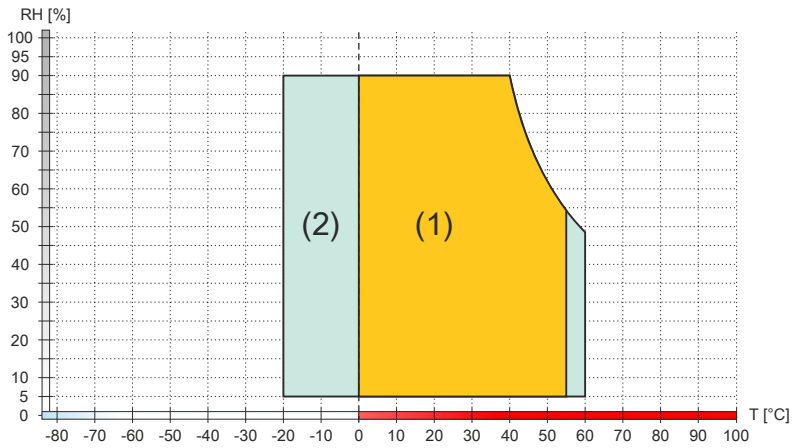

Diagram legend			
(1)	Operation	T [°C]	Temperature in °C
(2)	Storage and transport	RH [%]	Relative humidity (RH) in percent and **non-condensing**

4.2.2.6 5AP5130.185C-000

4.2.2.6.1 General information

- 18.5" TFT FHD color display
- Multi-touch (PCT)
- Flexible swing arm mounting or VESA
- IP65 protection with mounting unit 5ACCMA00.000x-000
- IP54 protection with mounting unit 5ACCMA00.010x-000
- IP10 protection with mounting unit 5ACCMA01.0100-000

4.2.2.6.2 Order data

Order number	Short description	Figure
	Panels	
5AP5130.185C-000	Automation Panel 18.5" Full HD TFT - 1920 x 1080 pixels (16:9) - Multi-touch (projected capacitive) - Swing arm mounting - Landscape format - For PPC2100 / PPC2200 / link modules	
	Optional accessories	
	Flanges	
5ACCFL00.0000-000	AP5000 flange - Swing arm rotary flange - For swing arm mounting unit	
5ACCFL00.0100-000	AP5000 flange - Swivel-tilt flange for swing arm - For swing arm mounting unit	
5ACCFL00.0200-000	AP5000 flange - Swing arm flange adapter - For Rittal - For swing arm mounting unit	
	Handles	
5ACCHD00.185B-000	AP5000 swing arm handles - For panel 5AP5130.185B/185C-000	
	Mounting units	
5ACCMA00.0000-000	AP5000 swing arm mounting unit	
5ACCMA00.0001-000	AP5000 swing arm mounting unit - 1x rear USB interface	
5ACCMA00.0002-000	AP5000 swing arm mounting unit - 2x rear USB interface	
5ACCMA00.0100-000	HMI mounting unit VESA IP54 - Leak tightness is only provided with suitable cable grommets.	
5ACCMA00.0101-000	HMI mounting unit VESA IP54 w/USB - Leak tightness is only provided with suitable cable grommets.	
5ACCMA01.0100-000	AP5000 VESA mounting unit IP10/IP20 - IP20 with 5AP5120.*-000 - IP10 with 5AP5130.*-000, 5AP5230.*-000	

4.2.2.6.3 Technical data

Information:

The following specified characteristic data, features and limit values are only valid for these individual components and may differ from those of the complete system. The data specified for the complete system applies to the complete system in which this individual component is used, for example.

Order number	5AP5130.185C-000
General information	
B&R ID code	0xF24C
Certifications	
CE	Yes
UL	cULus E115267 Industrial control equipment
EAC	Yes
Display	
Type	TFT color
Diagonal	18.5"
Colors	16.7 million
Resolution	FHD, 1920 x 1080 pixels
Contrast	1500:1
Viewing angles	
Horizontal	Direction R = 85° / Direction L = 85°
Vertical	Direction U = 85° / Direction D = 85°
Backlight	
Type	LED
Brightness (dimmable)	Typ. 40 to 400 cd/m²
Half-brightness time	50,000 h [1)]
Touch screen	
Technology	Projected capacitive touch (PCT)
Transmittance	>90%

Order number	5AP5130.185C-000
Operating conditions	
Pollution degree per EN 61131-2	Pollution degree 2
Degree of protection per EN 60529	IP65 with mounting unit 5ACCMAS00.000x-000 IP54 with mounting unit 5ACCMA00.010x-000
Degree of protection per UL 50	Type 4X indoor with mounting unit 5ACCMAS00.000x-000 Type 1 with mounting unit 5ACCMA00.010x-000
Mechanical properties	
Housing	
Material	Aluminum, coated
Coating	White aluminum (similar to RAL 9006)
Front	
Frame	Aluminum (similar to RAL 9006), coated
Design	Black
Dimensions	
Width	494 mm
Height	306 mm
Weight	6700 g

1) At 25°C ambient temperature. Reducing the brightness by 50% can increase the half-brightness time by approximately 50%.

4.2.2.6.4 Dimensions

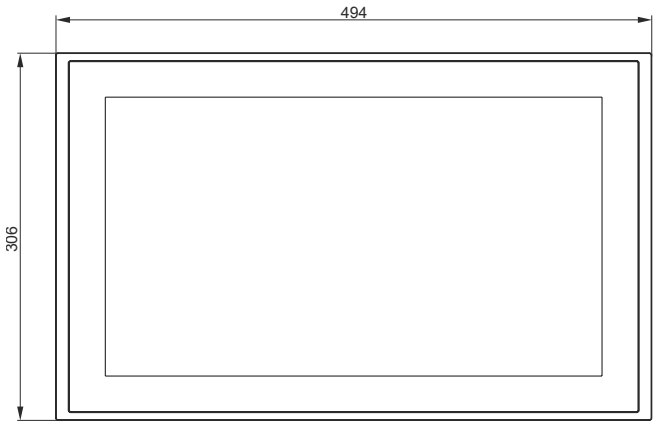

4.2.2.6.5 Temperature/Humidity diagram

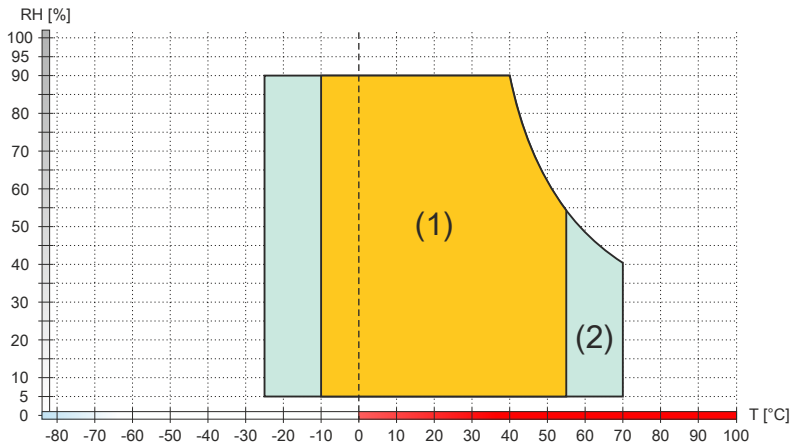

Diagram legend			
(1)	Operation	T [°C]	Temperature in °C
(2)	Storage and transport	RH [%]	Relative humidity (RH) in percent and **non-condensing**

4.2.2.7 5AP5130.215C-000

4.2.2.7.1 General information

- 21.5" TFT FHD color display
- Multi-touch (PCT)
- Flexible swing arm mounting or VESA
- IP65 protection with mounting unit 5ACCMA00.000x-000
- IP54 protection with mounting unit 5ACCMA00.010x-000
- IP10 protection with mounting unit 5ACCMA01.0100-000

4.2.2.7.2 Order data

Order number	Short description	Figure
	Panels	
5AP5130.215C-000	Automation Panel 21.5" Full HD TFT - 1920 x 1080 pixels (16:9) - Multi-touch (projected capacitive) - Swing arm mounting - Landscape format - For PPC2100 / PPC2200 / link modules	
	Optional accessories	
	Flanges	
5ACCFL00.0000-000	AP5000 flange - Swing arm rotary flange - For swing arm mounting unit	
5ACCFL00.0100-000	AP5000 flange - Swivel-tilt flange for swing arm - For swing arm mounting unit	
5ACCFL00.0200-000	AP5000 flange - Swing arm flange adapter - For Rittal - For swing arm mounting unit	
	Handles	
5ACCHD00.215C-000	AP5000 swing arm handles - For panel 5AP5130.215C-000	
	Mounting units	
5ACCMA00.0000-000	AP5000 swing arm mounting unit	
5ACCMA00.0001-000	AP5000 swing arm mounting unit - 1x rear USB interface	
5ACCMA00.0002-000	AP5000 swing arm mounting unit - 2x rear USB interface	
5ACCMA00.0100-000	HMI mounting unit VESA IP54 - Leak tightness is only provided with suitable cable grommets.	
5ACCMA00.0101-000	HMI mounting unit VESA IP54 w/USB - Leak tightness is only provided with suitable cable grommets.	
5ACCMA01.0100-000	AP5000 VESA mounting unit IP10/IP20 - IP20 with 5AP5120.*-000 - IP10 with 5AP5130.*-000, 5AP5230.*-000	

4.2.2.7.3 Technical data

Information:

The following specified characteristic data, features and limit values are only valid for these individual components and may differ from those of the complete system. The data specified for the complete system applies to the complete system in which this individual component is used, for example.

Order number	5AP5130.215C-000
General information	
B&R ID code	0xE9C9
Certifications	
CE	Yes
UL	cULus E115267 Industrial control equipment
EAC	Yes
Display	
Type	TFT color
Diagonal	21.5"
Colors	16.7 million
Resolution	FHD, 1920 x 1080 pixels
Contrast	5000:1
Viewing angles	
Horizontal	Direction R = 89° / Direction L = 89°
Vertical	Direction U = 89° / Direction D = 89°
Backlight	
Type	LED
Brightness (dimmable)	Typ. 12.5 to 250 cd/m²
Half-brightness time [1)]	30,000 h
Touch screen	
Technology	Projected capacitive touch (PCT)
Transmittance	>90%
Operating conditions	
Pollution degree per EN 61131-2	Pollution degree 2

Order number	5AP5130.215C-000
Degree of protection per EN 60529	IP65 with mounting unit 5ACCMA00.000x-000 IP54 with mounting unit 5ACCMA00.010x-000
Degree of protection per UL 50	Type 4X indoor with mounting unit 5ACCMA00.000x-000 Type 1 with mounting unit 5ACCMA00.010x-000
Mechanical properties	
Housing	
Material	Aluminum, coated
Coating	White aluminum (similar to RAL 9006)
Front	
Frame	Aluminum (similar to RAL 9006), coated
Design	Black
Dimensions	
Width	560.5 mm
Height	344 mm
Weight	7300 g

1) At 25°C ambient temperature. Reducing the brightness by 50% can increase the half-brightness time by approximately 50%.

4.2.2.7.4 Dimensions

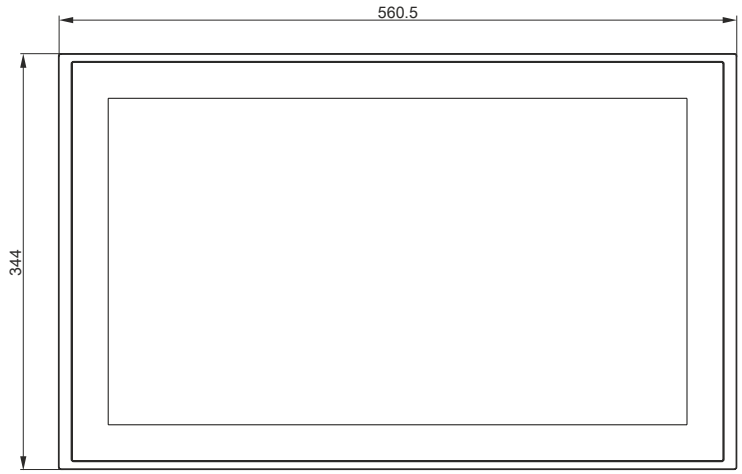

4.2.2.7.5 Temperature/Humidity diagram

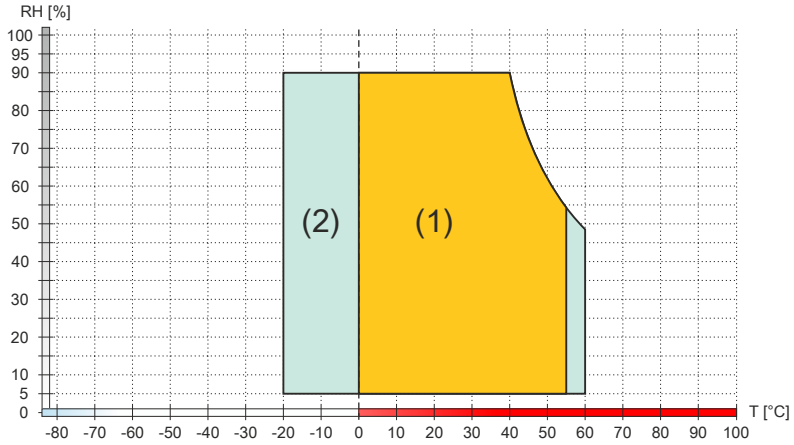

Diagram legend			
(1)	Operation	T [°C]	Temperature in °C
(2)	Storage and transport	RH [%]	Relative humidity (RH) in percent and **non-condensing**

4.2.2.8 5AP5130.240C-000

4.2.2.8.1 General information

- 24.0" TFT FHD color display
- Multi-touch (PCT)
- Flexible swing arm mounting or VESA
- IP65 protection with mounting unit 5ACCMA00.000x-000
- IP54 protection with mounting unit 5ACCMA00.010x-000
- IP10 protection with mounting unit 5ACCMA01.0100-000

4.2.2.8.2 Order data

Order number	Short description	Figure
	Panels	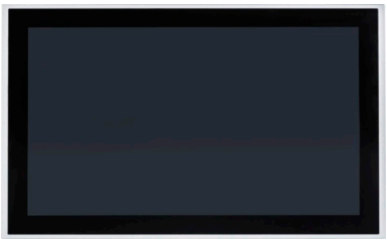
5AP5130.240C-000	Automation Panel 24.0" Full HD TFT - 1920 x 1080 pixels (16:9) - Multi-touch (projected capacitive) - Swing arm mounting - Landscape format - For PPC2100 / PPC2200 / link modules	
	Optional accessories	
	Flanges	
5ACCFL00.0000-000	AP5000 flange - Swing arm rotary flange - For swing arm mounting unit	
5ACCFL00.0100-000	AP5000 flange - Swivel-tilt flange for swing arm - For swing arm mounting unit	
5ACCFL00.0200-000	AP5000 flange - Swing arm flange adapter - For Rittal - For swing arm mounting unit	
	Handles	
5ACCHD00.240C-000	AP5000 swing arm handles - For panel 5AP5130.240C-000	
	Mounting units	
5ACCMA00.0000-000	AP5000 swing arm mounting unit	
5ACCMA00.0001-000	AP5000 swing arm mounting unit - 1x rear USB interface	
5ACCMA00.0002-000	AP5000 swing arm mounting unit - 2x rear USB interface	
5ACCMA00.0100-000	HMI mounting unit VESA IP54 - Leak tightness is only provided with suitable cable grommets.	
5ACCMA00.0101-000	HMI mounting unit VESA IP54 w/USB - Leak tightness is only provided with suitable cable grommets.	
5ACCMA01.0100-000	AP5000 VESA mounting unit IP10/IP20 - IP20 with 5AP5120.*-000 - IP10 with 5AP5130.*-000, 5AP5230.*-000	

4.2.2.8.3 Technical data

Information:

The following specified characteristic data, features and limit values are only valid for these individual components and may differ from those of the complete system. The data specified for the complete system applies to the complete system in which this individual component is used, for example.

Order number	5AP5130.240C-000
General information	
B&R ID code	0xE9CA
Certifications	
CE	Yes
UL	cULus E115267 Industrial control equipment
EAC	Yes
Display	
Type	TFT color
Diagonal	24.0"
Colors	16.7 million
Resolution	FHD, 1920 x 1080 pixels
Contrast	5000:1
Viewing angles	
Horizontal	Direction R = 89° / Direction L = 89°
Vertical	Direction U = 89° / Direction D = 89°
Backlight	
Type	LED
Brightness (dimmable)	Typ. 30 to 300 cd/m²
Half-brightness time [1)]	50,000 h
Touch screen	
Technology	Projected capacitive touch (PCT)
Transmittance	>90%
Operating conditions	
Pollution degree per EN 61131-2	Pollution degree 2

Order number	5AP5130.240C-000
Degree of protection per EN 60529	IP65 with mounting unit 5ACCMA00.000x-000 IP54 with mounting unit 5ACCMA00.010x-000
Degree of protection per UL 50	Type 4X indoor with mounting unit 5ACCMA00.000x-000 Type 1 with mounting unit 5ACCMA00.010x-000
Mechanical properties	
Housing	
Material	Aluminum, coated
Coating	White aluminum (similar to RAL 9006)
Front	
Frame	Aluminum (similar to RAL 9006), coated
Design	Black
Dimensions	
Width	617.5 mm
Height	375 mm
Weight	8500 g

1) At 25°C ambient temperature. Reducing the brightness by 50% can increase the half-brightness time by approximately 50%.

4.2.2.8.4 Dimensions

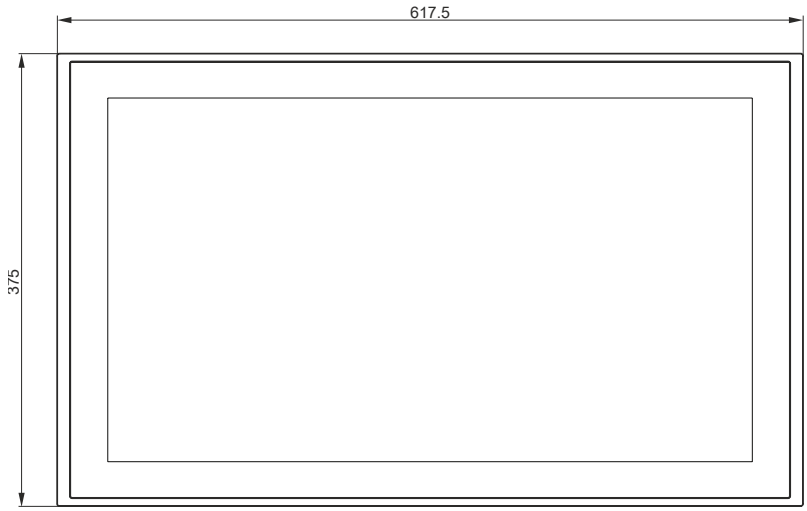

4.2.2.8.5 Temperature/Humidity diagram

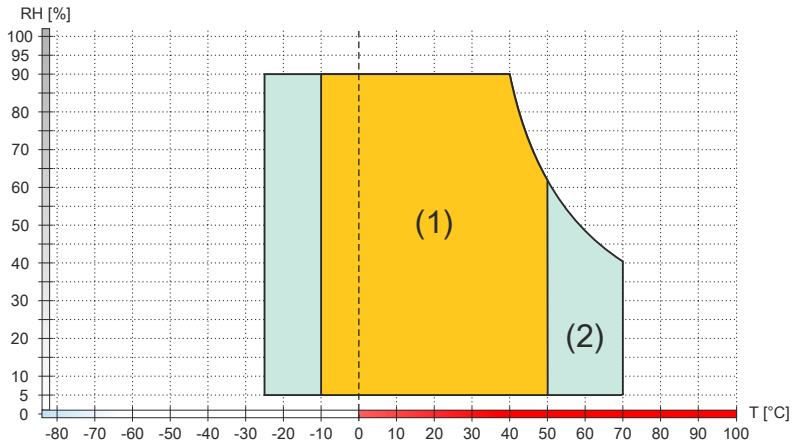

Diagram legend			
(1)	Operation	T [°C]	Temperature in °C
(2)	Storage and transport	RH [%]	Relative humidity (RH) in percent and **non-condensing**

4.2.2.9 5AP5230.156B-000

4.2.2.9.1 General information

- 15.6" TFT HD color display
- Multi-touch (PCT)
- Possible to install expansion unit
- Flexible swing arm mounting or VESA
- IP65 protection with mounting unit 5ACCMA00.000x-000
- IP54 protection with mounting unit 5ACCMA00.010x-000
- IP10 protection with mounting unit 5ACCMA01.0100-000

4.2.2.9.2 Order data

Order number	Short description	Figure
	Panels	
5AP5230.156B-000	Automation Panel 15.6" HD TFT - 1366 x 768 pixels (16:9) - Multi-touch (projected capacitive) - Swing arm mounting - Landscape format - Expansion option - For PPC2100 / PPC2200 / link modules	
	Optional accessories	
	Expansion units	
5ACCKP00.156B-000	AP5000 swing arm expansion option - Expansion cover - For switching elements - 10x cutouts for 22.3 mm switching elements - For panel 5AP5230.156B/156C-000	
5ACCKP01.156B-000	AP5000 swing arm expansion option - Expansion unit - 1x emergency stop - 2x pushbutton (red and green) - 1x selector switch - 1x key switch - 1x front USB interface - For panel 5AP5230.156B/156C-000	
5ACCKP04.156B-000	AP5000 swing arm expansion option - Expansion unit - 1x emergency stop - 3x pushbutton (red, green, blue) - 1x key switch - 1x front USB interface - For panel 5AP5230.156B/156C-000	
	Flanges	
5ACCFL00.0000-000	AP5000 flange - Swing arm rotary flange - For swing arm mounting unit	
5ACCFL00.0100-000	AP5000 flange - Swivel-tilt flange for swing arm - For swing arm mounting unit	
5ACCFL00.0200-000	AP5000 flange - Swing arm flange adapter - For Rittal - For swing arm mounting unit	
	Handles	
5ACCHD01.156B-000	AP5000 swing arm handles - For panel 5AP5230.156B/156C-000	
	Mounting units	
5ACCMA00.0000-000	AP5000 swing arm mounting unit	
5ACCMA00.0001-000	AP5000 swing arm mounting unit - 1x rear USB interface	
5ACCMA00.0002-000	AP5000 swing arm mounting unit - 2x rear USB interface	
5ACCMA00.0100-000	HMI mounting unit VESA IP54 - Leak tightness is only provided with suitable cable grommets.	
5ACCMA00.0101-000	HMI mounting unit VESA IP54 w/USB - Leak tightness is only provided with suitable cable grommets.	
5ACCMA01.0100-000	AP5000 VESA mounting unit IP10/IP20 - IP20 with 5AP5120.*-000 - IP10 with 5AP5130.*-000, 5AP5230.*-000	

4.2.2.9.3 Technical data

Information:

The following specified characteristic data, features and limit values are only valid for these individual components and may differ from those of the complete system. The data specified for the complete system applies to the complete system in which this individual component is used, for example.

Order number	5AP5230.156B-000
General information	
B&R ID code	0xE9F5
Certifications	
CE	Yes
UL	cULus E115267 Industrial control equipment
EAC	Yes
Display	
Type	TFT color
Diagonal	15.6"
Colors	16.7 million
Resolution	HD, 1366 x 768 pixels

Order number	5AP5230.156B-000
Contrast	1000:1
Viewing angles	
Horizontal	Direction R = 85° / Direction L = 85°
Vertical	Direction U = 85° / Direction D = 85°
Backlight	
Type	LED
Brightness (dimmable)	Typ. 40 to 400 cd/m²
Half-brightness time 1)	70,000 h
Touch screen	
Technology	Projected capacitive touch (PCT)
Transmittance	>90%
Operating conditions	
Pollution degree per EN 61131-2	Pollution degree 2
Degree of protection per EN 60529	IP65 with mounting unit 5ACCMA00.000x-000 IP54 with mounting unit 5ACCMA00.010x-000
Degree of protection per UL 50	Type 4X indoor with mounting unit 5ACCMA00.000x-000 Type 1 with mounting unit 5ACCMA00.010x-000
Mechanical properties	
Housing	
Material	Aluminum, coated
Coating	White aluminum (similar to RAL 9006)
Front	
Frame	Aluminum (similar to RAL 9006), coated
Design	Black
Dimensions	
Width	433 mm
Height	349 mm
Weight	6400 g

1) At 25°C ambient temperature. Reducing the brightness by 50% can increase the half-brightness time by approximately 50%.

4.2.2.9.4 Dimensions

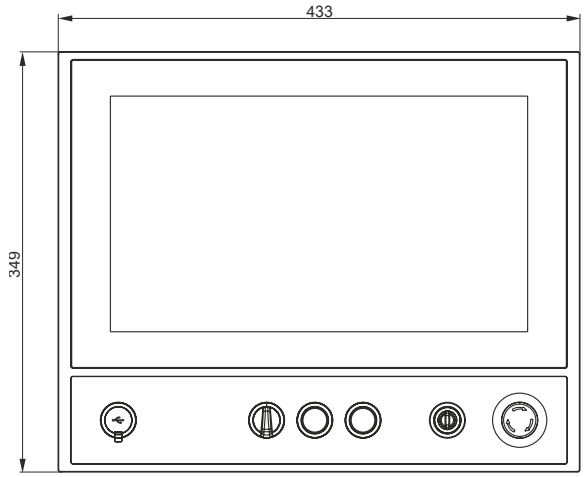

4.2.2.9.5 Temperature/Humidity diagram

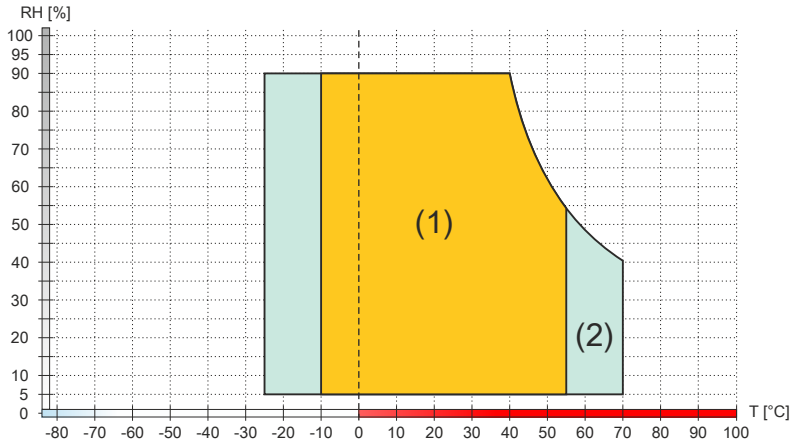

Diagram legend			
(1)	Operation	T [°C]	Temperature in °C
(2)	Storage and transport	RH [%]	Relative humidity (RH) in percent and **non-condensing**

4.2.2.10 5AP5230.156C-000

4.2.2.10.1 General information

- 15.6" TFT FHD color display
- Multi-touch (PCT)
- Possible to install expansion unit
- Flexible swing arm mounting or VESA
- IP65 protection with mounting unit 5ACCMA00.000x-000
- IP54 protection with mounting unit 5ACCMA00.010x-000
- IP10 protection with mounting unit 5ACCMA01.0100-000

4.2.2.10.2 Order data

Order number	Short description	Figure
	Panels	
5AP5230.156C-000	Automation Panel 15.6" Full HD TFT - 1920 x 1080 pixels (16:9) - Multi-touch (projected capacitive) - Swing arm mounting - Landscape format - Expansion option - For PPC2100 / PPC2200 / link modules	
	Optional accessories	
	Expansion units	
5ACCKP00.156B-000	AP5000 swing arm expansion option - Expansion cover - For switching elements - 10x cutouts for 22.3 mm switching elements - For panel 5AP5230.156B/156C-000	
5ACCKP01.156B-000	AP5000 swing arm expansion option - Expansion unit - 1x emergency stop - 2x pushbutton (red and green) - 1x selector switch - 1x key switch - 1x front USB interface - For panel 5AP5230.156B/156C-000	
5ACCKP04.156B-000	AP5000 swing arm expansion option - Expansion unit - 1x emergency stop - 3x pushbutton (red, green, blue) - 1x key switch - 1x front USB interface - For panel 5AP5230.156B/156C-000	
	Flanges	
5ACCFL00.0000-000	AP5000 flange - Swing arm rotary flange - For swing arm mounting unit	
5ACCFL00.0100-000	AP5000 flange - Swivel-tilt flange for swing arm - For swing arm mounting unit	
5ACCFL00.0200-000	AP5000 flange - Swing arm flange adapter - For Rittal - For swing arm mounting unit	
	Handles	
5ACCHD01.156B-000	AP5000 swing arm handles - For panel 5AP5230.156B/156C-000	
	Mounting units	
5ACCMA00.0000-000	AP5000 swing arm mounting unit	
5ACCMA00.0001-000	AP5000 swing arm mounting unit - 1x rear USB interface	
5ACCMA00.0002-000	AP5000 swing arm mounting unit - 2x rear USB interface	
5ACCMA00.0100-000	HMI mounting unit VESA IP54 - Leak tightness is only provided with suitable cable grommets.	
5ACCMA00.0101-000	HMI mounting unit VESA IP54 w/USB - Leak tightness is only provided with suitable cable grommets.	
5ACCMA01.0100-000	AP5000 VESA mounting unit IP10/IP20 - IP20 with 5AP5120.*-000 - IP10 with 5AP5130.*-000, 5AP5230.*-000	

4.2.2.10.3 Technical data

Information:

The following specified characteristic data, features and limit values are only valid for these individual components and may differ from those of the complete system. The data specified for the complete system applies to the complete system in which this individual component is used, for example.

Order number	5AP5230.156C-000
General information	
B&R ID code	0xF24B
Certifications	
CE	Yes
UL	cULus E115267 Industrial control equipment
EAC	Yes
Display	
Type	TFT color
Diagonal	15.6"
Colors	16.7 million
Resolution	FHD, 1920 x 1080 pixels

Order number	5AP5230.156C-000
Contrast	1500:1
Viewing angles	
Horizontal	Direction R = 85° / Direction L = 85°
Vertical	Direction U = 85° / Direction D = 85°
Backlight	
Type	LED
Brightness (dimmable)	Typ. 40 to 400 cd/m²
Half-brightness time	70,000 h [1)]
Touch screen	
Technology	Projected capacitive touch (PCT)
Transmittance	>90%
Operating conditions	
Pollution degree per EN 61131-2	Pollution degree 2
Degree of protection per EN 60529	IP65 with mounting unit 5ACCMA00.000x-000 IP54 with mounting unit 5ACCMA00.010x-000
Degree of protection per UL 50	Type 4X indoor with mounting unit 5ACCMA00.000x-000 Type 1 with mounting unit 5ACCMA00.010x-000
Mechanical properties	
Housing	
Material	Aluminum, coated
Coating	White aluminum (similar to RAL 9006)
Front	
Frame	Aluminum (similar to RAL 9006), coated
Design	Black
Dimensions	
Width	433 mm
Height	349 mm
Weight	6400 g

1) At 25°C ambient temperature. Reducing the brightness by 50% can increase the half-brightness time by approximately 50%.

4.2.2.10.4 Dimensions

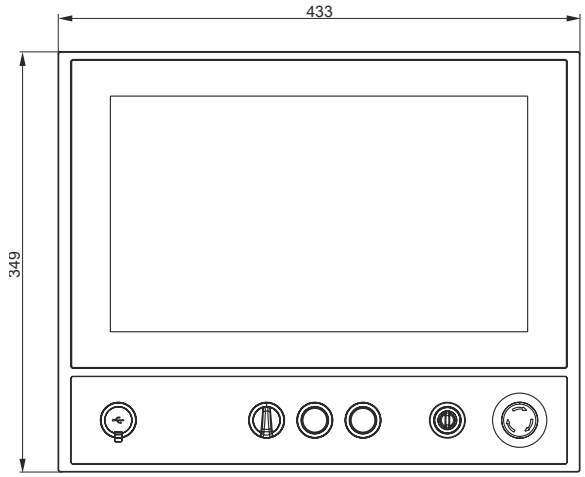

4.2.2.10.5 Temperature/Humidity diagram

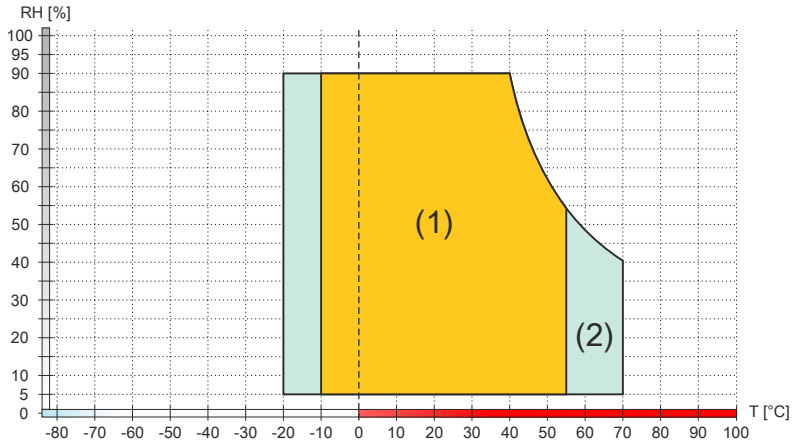

Diagram legend			
(1)	Operation	T [°C]	Temperature in °C
(2)	Storage and transport	RH [%]	Relative humidity (RH) in percent and **non-condensing**

4.2.2.11 5AP5230.185B-000

4.2.2.11.1 General information

- 18.5" TFT HD color display
- Multi-touch (PCT)
- Possible to install expansion unit
- Flexible swing arm mounting or VESA
- IP65 protection with mounting unit 5ACCMA00.000x-000
- IP54 protection with mounting unit 5ACCMA00.010x-000
- IP10 protection with mounting unit 5ACCMA01.0100-000

4.2.2.11.2 Order data

Order number	Short description	Figure
	Panels	
5AP5230.185B-000	Automation Panel 18.5" HD TFT - 1366 x 768 pixels (16:9) - Multi-touch (projected capacitive) - Swing arm mounting - Landscape format - Expansion option - For PPC2100 / PPC2200 / link modules	
	Optional accessories	
	Expansion units	
5ACCKP00.185B-000	AP5000 swing arm expansion option - Expansion cover - For switching elements - 11x cutouts for 22.3 mm switching elements - For panel 5AP5230.185B/185C-000	
5ACCKP01.185B-000	AP5000 swing arm expansion option - Expansion unit - 1x emergency stop - 2x pushbutton (red and green) - 1x selector switch - 1x key switch - 1x front USB interface - For panel 5AP5230.185B/185C-000	
5ACCKP03.185B-000	AP5000 swing arm expansion option - Expansion unit - 1x RFID read/write unit - 1x emergency stop - 2x pushbutton (red and green) - 1x selector switch - 1x key switch - 1x front USB interface - For panel 5AP5230.185B/185C-000	
5ACCKP04.185B-000	AP5000 swing arm expansion option - Expansion unit - 1x emergency stop - 3x pushbutton (red, green, blue) - 1x key switch - 1x front USB interface - For panel 5AP5230.185B/185C-000	
5ACCKP05.185B-000	AP5000 swing arm expansion option - Expansion unit - 1x RFID read/write unit - 1x emergency stop - 3x pushbutton (red, green, blue) - 1x key switch - 1x front USB interface - For panel 5AP5230.185B/185C-000	
	Flanges	
5ACCFL00.0000-000	AP5000 flange - Swing arm rotary flange - For swing arm mounting unit	
5ACCFL00.0100-000	AP5000 flange - Swivel-tilt flange for swing arm - For swing arm mounting unit	
5ACCFL00.0200-000	AP5000 flange - Swing arm flange adapter - For Rittal - For swing arm mounting unit	
	Handles	
5ACCHD01.185B-000	AP5000 swing arm handles - For panel 5AP5230.185B/185C-000	
	Mounting units	
5ACCMA00.0000-000	AP5000 swing arm mounting unit	
5ACCMA00.0001-000	AP5000 swing arm mounting unit - 1x rear USB interface	
5ACCMA00.0002-000	AP5000 swing arm mounting unit - 2x rear USB interface	
5ACCMA00.0100-000	HMI mounting unit VESA IP54 - Leak tightness is only provided with suitable cable grommets.	
5ACCMA00.0101-000	HMI mounting unit VESA IP54 w/USB - Leak tightness is only provided with suitable cable grommets.	
5ACCMA01.0100-000	AP5000 VESA mounting unit IP10/IP20 - IP20 with 5AP5120.*-000 - IP10 with 5AP5130.*-000, 5AP5230.*-000	

4.2.2.11.3 Technical data

Information:

The following specified characteristic data, features and limit values are only valid for these individual components and may differ from those of the complete system. The data specified for the complete system applies to the complete system in which this individual component is used, for example.

Order number	5AP5230.185B-000
General information	
B&R ID code	0xE9F6
Certifications	
CE	Yes
UL	cULus E115267 Industrial control equipment
EAC	Yes
Display	
Type	TFT color
Diagonal	18.5"
Colors	16.7 million
Resolution	HD, 1366 x 768 pixels
Contrast	1000:1
Viewing angles	
Horizontal	Direction R = 85° / Direction L = 85°
Vertical	Direction U = 80° / Direction D = 80°
Backlight	
Type	LED
Brightness (dimmable)	Typ. 15 to 300 cd/m²
Half-brightness time [1]	50,000 h
Touch screen	
Technology	Projected capacitive touch (PCT)
Transmittance	>90%
Slots	
Expansion unit	Yes
Operating conditions	
Pollution degree per EN 61131-2	Pollution degree 2
Degree of protection per EN 60529	IP65 with mounting unit 5ACCMA00.000x-000 IP54 with mounting unit 5ACCMA00.010x-000
Degree of protection per UL 50	Type 4X indoor with mounting unit 5ACCMA00.000x-000 Type 1 with mounting unit 5ACCMA00.010x-000
Mechanical properties	
Housing	
Material	Aluminum, coated
Coating	White aluminum (similar to RAL 9006)
Front	
Frame	Aluminum (similar to RAL 9006), coated
Design	Black
Dimensions	
Width	494 mm
Height	385.5 mm
Weight	8300 g

1) At 25°C ambient temperature. Reducing the brightness by 50% can increase the half-brightness time by approximately 50%.

4.2.2.11.4 Dimensions

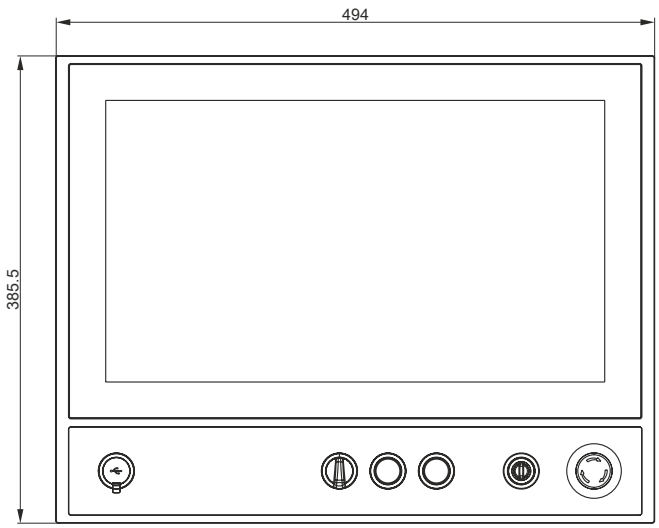

4.2.2.11.5 Temperature/Humidity diagram

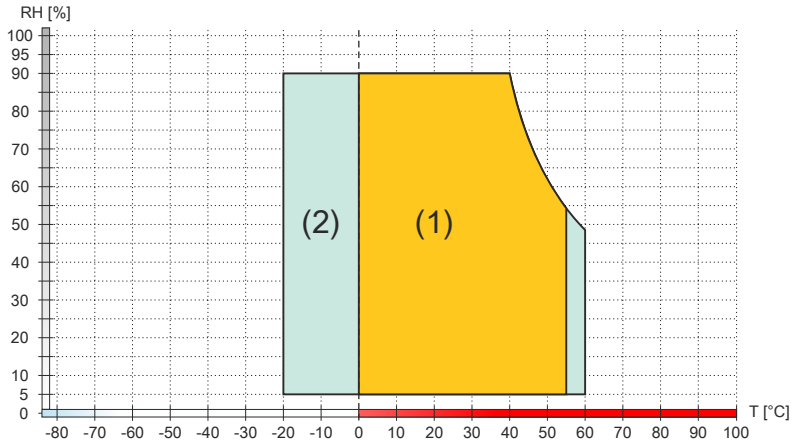

Diagram legend			
(1)	Operation	T [°C]	Temperature in °C
(2)	Storage and transport	RH [%]	Relative humidity (RH) in percent and **non-condensing**

4.2.2.12 5AP5230.185C-000

4.2.2.12.1 General information

- 18.5" TFT FHD color display
- Multi-touch (PCT)
- Possible to install expansion unit
- Flexible swing arm mounting or VESA
- IP65 protection with mounting unit 5ACCMA00.000x-000
- IP54 protection with mounting unit 5ACCMA00.010x-000
- IP10 protection with mounting unit 5ACCMA01.0100-000

4.2.2.12.2 Order data

Order number	Short description	Figure
	Panels	
5AP5230.185C-000	Automation Panel 18.5" Full HD TFT - 1920 x 1080 pixels (16:9) - Multi-touch (projected capacitive) - Swing arm mounting - Landscape format - Expansion option - For PPC2100 / PPC2200 / link modules	
	Optional accessories	
	Expansion units	
5ACCKP00.185B-000	AP5000 swing arm expansion option - Expansion cover - For switching elements - 11x cutouts for 22.3 mm switching elements - For panel 5AP5230.185B/185C-000	
5ACCKP01.185B-000	AP5000 swing arm expansion option - Expansion unit - 1x emergency stop - 2x pushbutton (red and green) - 1x selector switch - 1x key switch - 1x front USB interface - For panel 5AP5230.185B/185C-000	
5ACCKP03.185B-000	AP5000 swing arm expansion option - Expansion unit - 1x RFID read/write unit - 1x emergency stop - 2x pushbutton (red and green) - 1x selector switch - 1x key switch - 1x front USB interface - For panel 5AP5230.185B/185C-000	
5ACCKP04.185B-000	AP5000 swing arm expansion option - Expansion unit - 1x emergency stop - 3x pushbutton (red, green, blue) - 1x key switch - 1x front USB interface - For panel 5AP5230.185B/185C-000	
5ACCKP05.185B-000	AP5000 swing arm expansion option - Expansion unit - 1x RFID read/write unit - 1x emergency stop - 3x pushbutton (red, green, blue) - 1x key switch - 1x front USB interface - For panel 5AP5230.185B/185C-000	
	Flanges	
5ACCFL00.0000-000	AP5000 flange - Swing arm rotary flange - For swing arm mounting unit	
5ACCFL00.0100-000	AP5000 flange - Swivel-tilt flange for swing arm - For swing arm mounting unit	
5ACCFL00.0200-000	AP5000 flange - Swing arm flange adapter - For Rittal - For swing arm mounting unit	
	Handles	
5ACCHD01.185B-000	AP5000 swing arm handles - For panel 5AP5230.185B/185C-000	
	Mounting units	
5ACCMA00.0000-000	AP5000 swing arm mounting unit	
5ACCMA00.0001-000	AP5000 swing arm mounting unit - 1x rear USB interface	
5ACCMA00.0002-000	AP5000 swing arm mounting unit - 2x rear USB interface	
5ACCMA00.0100-000	HMI mounting unit VESA IP54 - Leak tightness is only provided with suitable cable grommets.	
5ACCMA00.0101-000	HMI mounting unit VESA IP54 w/USB - Leak tightness is only provided with suitable cable grommets.	
5ACCMA01.0100-000	AP5000 VESA mounting unit IP10/IP20 - IP20 with 5AP5120.*-000 - IP10 with 5AP5130.*-000, 5AP5230.*-000	

4.2.2.12.3 Technical data

Information:

The following specified characteristic data, features and limit values are only valid for these individual components and may differ from those of the complete system. The data specified for the complete system applies to the complete system in which this individual component is used, for example.

Order number	5AP5230.185C-000
General information	
B&R ID code	0xF24D
Certifications	
CE	Yes
UL	cULus E115267 Industrial control equipment
EAC	Yes
Display	
Type	TFT color
Diagonal	18.5"
Colors	16.7 million
Resolution	FHD, 1920 x 1080
Contrast	1500:1
Viewing angles	
Horizontal	Direction R = 85° / Direction L = 85°
Vertical	Direction U = 85° / Direction D = 85°
Backlight	
Type	LED
Brightness (dimmable)	Typ. 40 to 400 cd/m²
Half-brightness time	50,000 h [1)]
Touch screen	
Technology	Projected capacitive touch (PCT)
Transmittance	>90%
Slots	
Expansion unit	Yes
Operating conditions	
Pollution degree per EN 61131-2	Pollution degree 2
Degree of protection per EN 60529	IP65 with mounting unit 5ACCMA00.000x-000 IP54 with mounting unit 5ACCMA00.010x-000
Degree of protection per UL 50	Type 4X indoor with mounting unit 5ACCMA00.000x-000 Type 1 with mounting unit 5ACCMA00.010x-000
Mechanical properties	
Housing	
Material	Aluminum, coated
Coating	White aluminum (similar to RAL 9006)
Front	
Frame	Aluminum (similar to RAL 9006)
Design	Black
Dimensions	
Width	494 mm
Height	385.5 mm
Weight	8300 g

1) At 25°C ambient temperature. Reducing the brightness by 50% can increase the half-brightness time by approximately 50%.

4.2.2.12.4 Dimensions

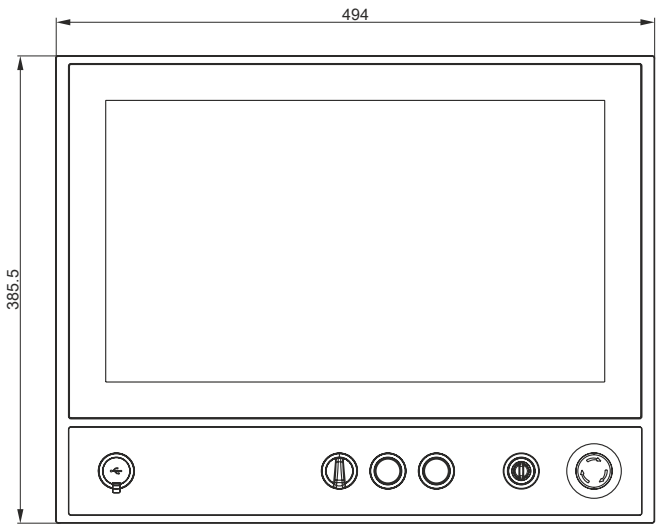

4.2.2.12.5 Temperature/Humidity diagram

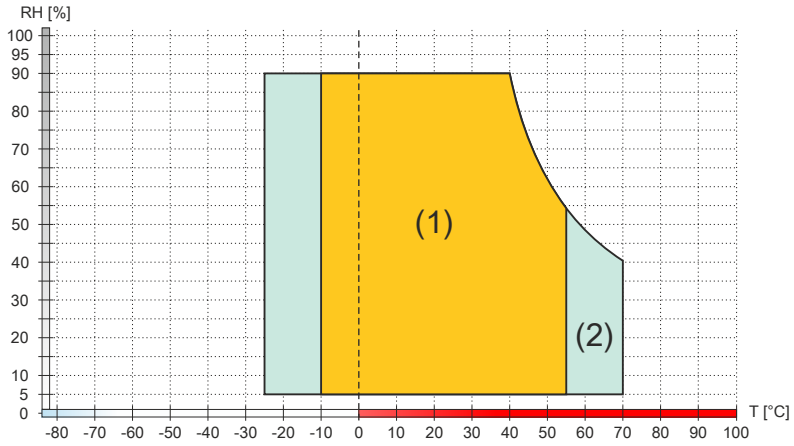

Diagram legend			
(1)	Operation	T [°C]	Temperature in °C
(2)	Storage and transport	RH [%]	Relative humidity (RH) in percent and **non-condensing**

4.2.2.13 5AP5230.215C-000

4.2.2.13.1 General information

- 21.5" TFT FHD color display
- Multi-touch (PCT)
- Possible to install expansion unit
- Flexible swing arm mounting or VESA
- IP65 protection with mounting unit 5ACCMA00.000x-000
- IP54 protection with mounting unit 5ACCMA00.010x-000
- IP10 protection with mounting unit 5ACCMA01.0100-000

4.2.2.13.2 Order data

Order number	Short description	Figure
	Panels	
5AP5230.215C-000	Automation Panel 21.5" Full HD TFT - 1920 x 1080 pixels (16:9) - Multi-touch (projected capacitive) - Swing arm mounting - Landscape format - Expansion option - For PPC2100 / PPC2200 / link modules	
	Optional accessories	
	Expansion units	
5ACCKP00.215C-000	AP5000 swing arm expansion option - Expansion cover - For switching elements - 13x cutouts for 22.3 mm switching elements - For panel 5AP5230.215C-000	
5ACCKP01.215C-000	AP5000 swing arm expansion option - Expansion unit - 1x emergency stop - 2x pushbutton (red and green) - 1x selector switch - 1x key switch - 1x front USB interface - For panel 5AP5230.215C-000	
5ACCKP03.215C-000	AP5000 swing arm expansion option - Expansion unit - 1x RFID read/write unit - 1x emergency stop - 2x pushbutton (red and green) - 1x selector switch - 1x key switch - 1x front USB interface - For panel 5AP5230.215C-000	
5ACCKP04.215C-000	AP5000 swing arm expansion option - Expansion unit - 1x emergency stop - 3x pushbutton (red, green, blue) - 1x key switch - 1x front USB interface - For panel 5AP5230.215C-000	
5ACCKP05.215C-000	AP5000 swing arm expansion option - Expansion unit - 1x RFID read/write unit - 1x emergency stop - 3x pushbutton (red, green, blue) - 1x key switch - 1x front USB interface - For panel 5AP5230.215C-000	
	Flanges	
5ACCFL00.0000-000	AP5000 flange - Swing arm rotary flange - For swing arm mounting unit	
5ACCFL00.0100-000	AP5000 flange - Swivel-tilt flange for swing arm - For swing arm mounting unit	
5ACCFL00.0200-000	AP5000 flange - Swing arm flange adapter - For Rittal - For swing arm mounting unit	
	Handles	
5ACCHD01.215C-000	AP5000 swing arm handles - For panel 5AP5230.215C-000	
	Mounting units	
5ACCMA00.0000-000	AP5000 swing arm mounting unit	
5ACCMA00.0001-000	AP5000 swing arm mounting unit - 1x rear USB interface	
5ACCMA00.0002-000	AP5000 swing arm mounting unit - 2x rear USB interface	
5ACCMA00.0100-000	HMI mounting unit VESA IP54 - Leak tightness is only provided with suitable cable grommets.	
5ACCMA00.0101-000	HMI mounting unit VESA IP54 w/USB - Leak tightness is only provided with suitable cable grommets.	
5ACCMA01.0100-000	AP5000 VESA mounting unit IP10/IP20 - IP20 with 5AP5120.*-000 - IP10 with 5AP5130.*-000, 5AP5230.*-000	

4.2.2.13.3 Technical data

Information:

The following specified characteristic data, features and limit values are only valid for these individual components and may differ from those of the complete system. The data specified for the complete system applies to the complete system in which this individual component is used, for example.

Order number	5AP5230.215C-000
General information	
B&R ID code	0xE9F7
Certifications	
CE	Yes
UL	cULus E115267 Industrial control equipment
EAC	Yes
Display	
Type	TFT color
Diagonal	21.5"
Colors	16.7 million
Resolution	FHD, 1920 x 1080 pixels
Contrast	5000:1
Viewing angles	
Horizontal	Direction R = 89° / Direction L = 89°
Vertical	Direction U = 89° / Direction D = 89°
Backlight	
Type	LED
Brightness (dimmable)	Typ. 12.5 to 250 cd/m²
Half-brightness time [1]	30,000 h
Touch screen	
Technology	Projected capacitive touch (PCT)
Transmittance	>90%
Slots	
Expansion unit	Yes
Operating conditions	
Pollution degree per EN 61131-2	Pollution degree 2
Degree of protection per EN 60529	IP65 with mounting unit 5ACCMA00.000x-000 IP54 with mounting unit 5ACCMA00.010x-000
Degree of protection per UL 50	Type 4X indoor with mounting unit 5ACCMA00.000x-000 Type 1 with mounting unit 5ACCMA00.010x-000
Mechanical properties	
Housing	
Material	Aluminum, coated
Coating	White aluminum (similar to RAL 9006)
Front	
Frame	Aluminum (similar to RAL 9006), coated
Design	Black
Dimensions	
Width	560.5 mm
Height	423.5 mm
Weight	8900 g

1) At 25°C ambient temperature. Reducing the brightness by 50% can increase the half-brightness time by approximately 50%.

4.2.2.13.4 Dimensions

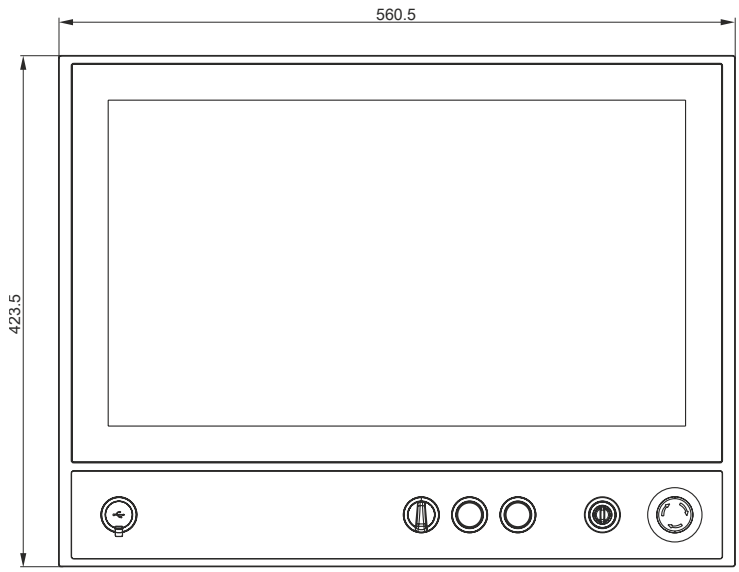

4.2.2.13.5 Temperature/Humidity diagram

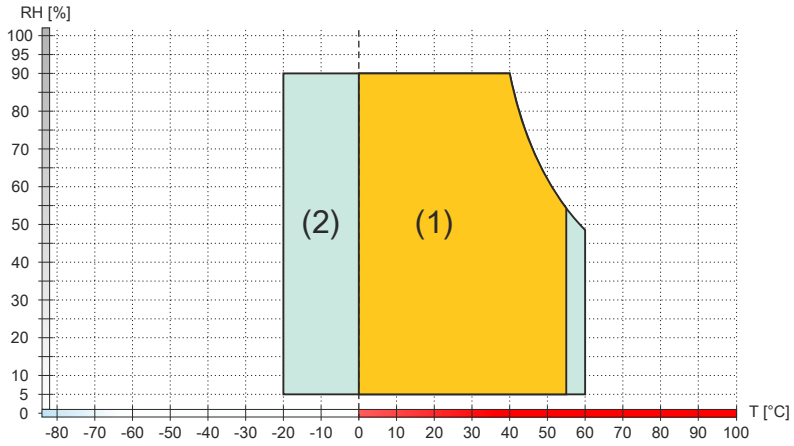

Diagram legend			
(1)	Operation	T [°C]	Temperature in °C
(2)	Storage and transport	RH [%]	Relative humidity (RH) in percent and **non-condensing**

4.2.2.14 5AP5230.215I-000

4.2.2.14.1 General information

- 21.5" TFT FHD color display
- Multi-touch (PCT)
- Possible to install expansion unit
- Flexible swing arm mounting or VESA
- IP65 protection with mounting unit 5ACCMA00.000x-000
- IP54 protection with mounting unit 5ACCMA00.010x-000
- IP10 protection with mounting unit 5ACCMA01.0100-000

4.2.2.14.2 Order data

Order number	Short description	Figure
	Panels	
5AP5230.215I-000	Automation Panel 21.5" Full HD TFT - 1920 x 1080 pixels (16:9) - Multi-touch (projected capacitive) - Swing arm mounting - Portrait format - Expansion option - For PPC2100 / PPC2200 / link modules	
	Optional accessories	
	Expansion units	
5ACCKP00.215I-000	AP5000 swing arm expansion option - Expansion cover - For switching elements - 7x cutouts for 22.3 mm switching elements - For panel 5AP5230.215I-000	
5ACCKP01.215I-000	AP5000 swing arm expansion option - Expansion unit - 1x emergency stop - 2x pushbutton (red and green) - 1x selector switch - 1x key switch - 1x front USB interface - For panel 5AP5230.215I-000	
5ACCKP04.215I-000	AP5000 swing arm expansion option - Expansion unit - 1x emergency stop - 3x pushbutton (red, green, blue) - 1x key switch - 1x front USB interface - For panel 5AP5230.215I-000	
	Flanges	
5ACCFL00.0000-000	AP5000 flange - Swing arm rotary flange - For swing arm mounting unit	
5ACCFL00.0100-000	AP5000 flange - Swivel-tilt flange for swing arm - For swing arm mounting unit	
5ACCFL00.0200-000	AP5000 flange - Swing arm flange adapter - For Rittal - For swing arm mounting unit	
	Handles	
5ACCHD01.215I-000	AP5000 swing arm handles - For panel 5AP5230.215I-000	
	Mounting units	
5ACCMA00.0000-000	AP5000 swing arm mounting unit	
5ACCMA00.0001-000	AP5000 swing arm mounting unit - 1x rear USB interface	
5ACCMA00.0002-000	AP5000 swing arm mounting unit - 2x rear USB interface	
5ACCMA00.0100-000	HMI mounting unit VESA IP54 - Leak tightness is only provided with suitable cable grommets.	
5ACCMA00.0101-000	HMI mounting unit VESA IP54 w/USB - Leak tightness is only provided with suitable cable grommets.	
5ACCMA01.0100-000	AP5000 VESA mounting unit IP10/IP20 - IP20 with 5AP5120.*-000 - IP10 with 5AP5130.*-000, 5AP5230.*-000	

4.2.2.14.3 Technical data

Information:

The following specified characteristic data, features and limit values are only valid for these individual components and may differ from those of the complete system. The data specified for the complete system applies to the complete system in which this individual component is used, for example.

Order number	5AP5230.215I-000
General information	
B&R ID code	0xE9F8
Certifications	
CE	Yes
UL	cULus E115267 Industrial control equipment
EAC	Yes
Display	
Type	TFT color
Diagonal	21.5"
Colors	16.7 million
Resolution	FHD, 1920 × 1080 pixels

Order number	5AP5230.215l-000
Contrast	5000:1
Viewing angles	
Horizontal	Direction R = 89° / Direction L = 89°
Vertical	Direction U = 89° / Direction D = 89°
Backlight	
Type	LED
Brightness (dimmable)	Typ. 12.5 to 250 cd/m²
Half-brightness time [1]	30,000 h
Touch screen	
Technology	Projected capacitive touch (PCT)
Transmittance	>90%
Operating conditions	
Pollution degree per EN 61131-2	Pollution degree 2
Degree of protection per EN 60529	IP65 with mounting unit 5ACCMA00.000x-000 IP54 with mounting unit 5ACCMA00.010x-000
Degree of protection per UL 50	Type 4X indoor with mounting unit 5ACCMA00.000x-000 Type 1 with mounting unit 5ACCMA00.010x-000
Mechanical properties	
Housing	
Material	Aluminum, coated
Coating	White aluminum (similar to RAL 9006)
Front	
Frame	Aluminum (similar to RAL 9006), coated
Design	Black
Dimensions	
Width	352 mm
Height	632 mm
Weight	5400 g

1) At 25°C ambient temperature. Reducing the brightness by 50% can increase the half-brightness time by approximately 50%.

4.2.2.14.4 Dimensions

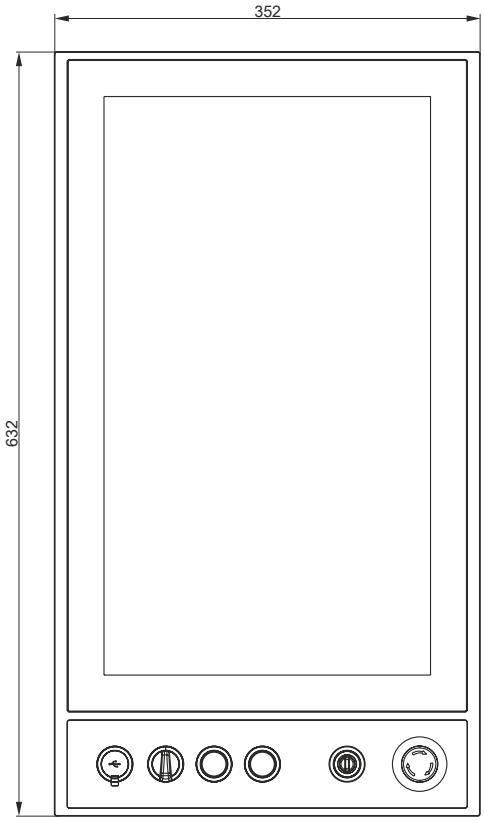

4.2.2.14.5 Temperature/Humidity diagram

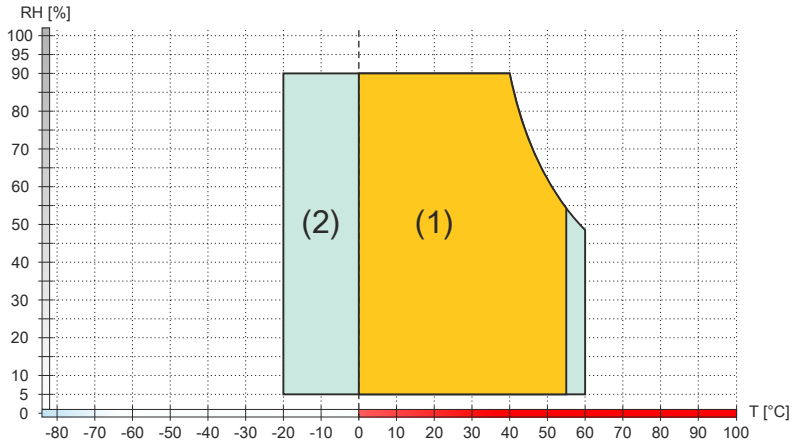

Diagram legend			
(1)	Operation	T [°C]	Temperature in °C
(2)	Storage and transport	RH [%]	Relative humidity (RH) in percent and **non-condensing**

4.2.2.15 5AP5230.240C-000

4.2.2.15.1 General information

- 24.0" TFT FHD color display
- Multi-touch (PCT)
- Possible to install expansion unit
- Flexible swing arm mounting or VESA
- IP65 protection with mounting unit 5ACCMA00.000x-000
- IP54 protection with mounting unit 5ACCMA00.010x-000
- IP10 protection with mounting unit 5ACCMA01.0100-000

4.2.2.15.2 Order data

Order number	Short description	Figure
	Panels	
5AP5230.240C-000	Automation Panel 24.0" Full HD TFT - 1920 x 1080 pixels (16:9) - Multi-touch (projected capacitive) - Swing arm mounting - Landscape format - Expansion option - For PPC2100 / PPC2200 / link modules	
	Optional accessories	
	Expansion units	
5ACCKP00.240C-000	AP5000 swing arm expansion option - Expansion cover - For switching elements - 14x cutouts for 22.3 mm switching elements - For panel 5AP5230.240C-000	
5ACCKP01.240C-000	AP5000 swing arm expansion option - Expansion unit - 1x emergency stop - 2x pushbutton (red and green) - 1x selector switch - 1x key switch - 1x front USB interface - For panel 5AP5230.240C-000	
5ACCKP03.240C-000	AP5000 swing arm expansion option - Expansion unit - 1x RFID read/write unit - 1x emergency stop - 2x pushbutton (red and green) - 1x selector switch - 1x key switch - 1x front USB interface - For panel 5AP5230.240C-000	
5ACCKP04.240C-000	AP5000 swing arm expansion option - Expansion unit - 1x emergency stop - 3x pushbutton (red, green, blue) - 1x key switch - 1x front USB interface - For panel 5AP5230.240C-000	
5ACCKP05.240C-000	AP5000 swing arm expansion option - Expansion unit - 1x RFID read/write unit - 1x emergency stop - 3x pushbutton (red, green, blue) - 1x key switch - 1x front USB interface - For panel 5AP5230.240C-000	
	Flanges	
5ACCFL00.0000-000	AP5000 flange - Swing arm rotary flange - For swing arm mounting unit	
5ACCFL00.0100-000	AP5000 flange - Swivel-tilt flange for swing arm - For swing arm mounting unit	
5ACCFL00.0200-000	AP5000 flange - Swing arm flange adapter - For Rittal - For swing arm mounting unit	
	Handles	
5ACCHD01.240C-000	AP5000 swing arm handles - For panel 5AP5230.240C-000	
	Mounting units	
5ACCMA00.0000-000	AP5000 swing arm mounting unit	
5ACCMA00.0001-000	AP5000 swing arm mounting unit - 1x rear USB interface	
5ACCMA00.0002-000	AP5000 swing arm mounting unit - 2x rear USB interface	
5ACCMA00.0100-000	HMI mounting unit VESA IP54 - Leak tightness is only provided with suitable cable grommets.	
5ACCMA00.0101-000	HMI mounting unit VESA IP54 w/USB - Leak tightness is only provided with suitable cable grommets.	
5ACCMA01.0100-000	AP5000 VESA mounting unit IP10/IP20 - IP20 with 5AP5120.*-000 - IP10 with 5AP5130.*-000, 5AP5230.*-000	

4.2.2.15.3 Technical data

Information:

The following specified characteristic data, features and limit values are only valid for these individual components and may differ from those of the complete system. The data specified for the complete system applies to the complete system in which this individual component is used, for example.

Order number	5AP5230.240C-000
General information	
B&R ID code	0xE9F9
Certifications	
CE	Yes
UL	cULus E115267 Industrial control equipment
EAC	Yes
Display	
Type	TFT color
Diagonal	24.0"
Colors	16.7 million
Resolution	FHD, 1920 x 1080 pixels
Contrast	5000:1
Viewing angles	
Horizontal	Direction R = 89° / Direction L = 89°
Vertical	Direction U = 89° / Direction D = 89°
Backlight	
Type	LED
Brightness (dimmable)	Typ. 30 to 300 cd/m²
Half-brightness time [1]	50,000 h
Touch screen	
Technology	Projected capacitive touch (PCT)
Transmittance	>90%
Slots	
Expansion unit	Yes
Operating conditions	
Pollution degree per EN 61131-2	Pollution degree 2
Degree of protection per EN 60529	IP65 with mounting unit 5ACCMA00.000x-000 IP54 with mounting unit 5ACCMA00.010x-000
Degree of protection per UL 50	Type 4X indoor with mounting unit 5ACCMA00.000x-000 Type 1 with mounting unit 5ACCMA00.010x-000
Mechanical properties	
Housing	
Material	Aluminum, coated
Coating	White aluminum (similar to RAL 9006)
Front	
Frame	Aluminum (similar to RAL 9006), coated
Design	Black
Dimensions	
Width	617.5 mm
Height	454.5 mm
Weight	10300 g

1) At 25°C ambient temperature. Reducing the brightness by 50% can increase the half-brightness time by approximately 50%.

4.2.2.15.4 Dimensions

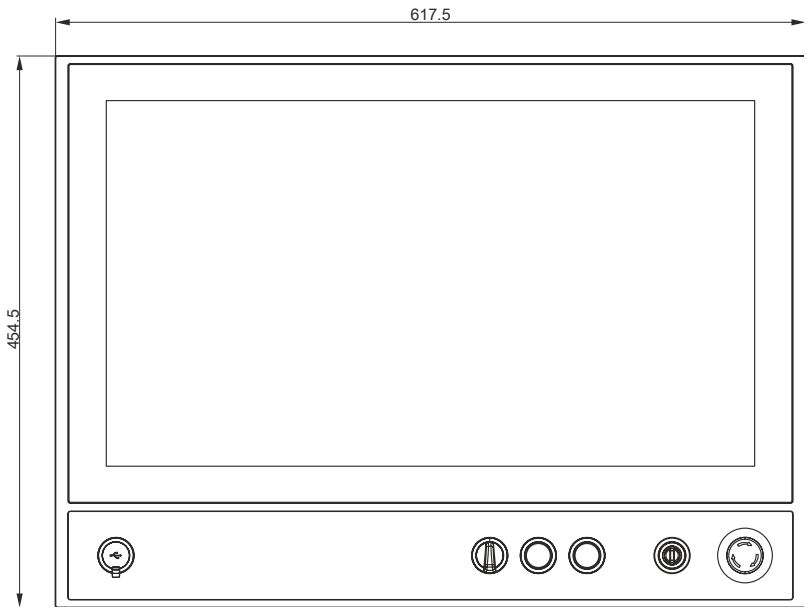

4.2.2.15.5 Temperature/Humidity diagram

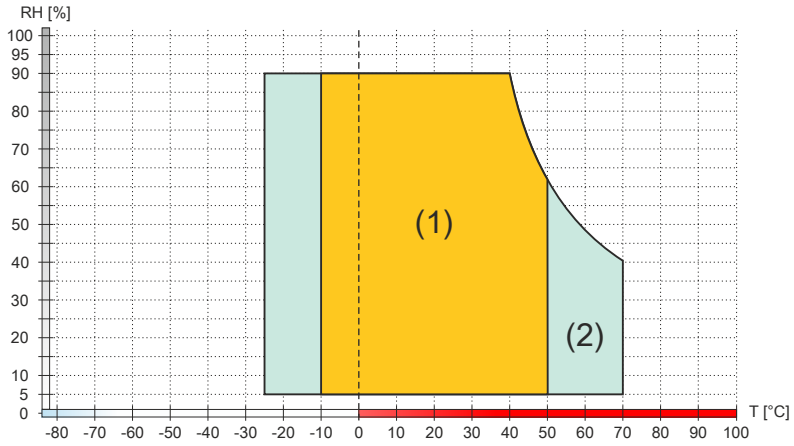

Diagram legend			
(1)	Operation	T [°C]	Temperature in °C
(2)	Storage and transport	RH [%]	Relative humidity (RH) in percent and **non-condensing**

4.2.3 Mounting units

4.2.3.1 5ACCMA00.0000-000

4.2.3.1.1 General information

The mounting unit is installed on the back of the panel. It protects the installed link module / system unit, enabling IP65 protection for the complete system. The flange is installed on the mounting unit. Due to the symmetrical design of the back of the panel, it is possible to install the mounting unit in 2 directions. If a flange is selected for mounting, flange output is possible towards the top or bottom.

- Protects the installed link module / system unit
- For swing arm mounting with flange
- IP65 protection

4.2.3.1.2 Order data

Order number	Short description	Figure
	Mounting units	
5ACCMA00.0000-000	AP5000 swing arm mounting unit	
	Optional accessories	
	Flanges	
5ACCFL00.0000-000	AP5000 flange - Swing arm rotary flange - For swing arm mounting unit	
5ACCFL00.0100-000	AP5000 flange - Swivel-tilt flange for swing arm - For swing arm mounting unit	
5ACCFL00.0200-000	AP5000 flange - Swing arm flange adapter - For Rittal - For swing arm mounting unit	

4.2.3.1.3 Technical data

Information:

The following specified characteristic data, features and limit values are only valid for these individual components and may differ from those of the complete system. The data specified for the complete system applies to the complete system in which this individual component is used, for example.

Order number	5ACCMA00.0000-000
General information	
Certifications	
CE	Yes
UL	cULus E115267 Industrial control equipment
EAC	Product family certification
Operating conditions	
Pollution degree per EN 61131-2	Pollution degree 2
Degree of protection per EN 60529	IP65 [1]
Degree of protection per UL 50	Type 4X indoor [1]
Mechanical properties	
Housing	
Material	Aluminum, coated
Coating	White aluminum (similar to RAL 9006)
Installation	Swing arm (with flange)
Dimensions	
Width	280 mm
Height	259 mm
Depth	96 mm
Weight	2500 g

1) Only with proper installation on the panel and proper installation on the swing arm.

4.2.3.2 5ACCMA00.0001-000

4.2.3.2.1 General information

The mounting unit is installed on the back of the panel. It protects the installed link module / system unit, enabling IP65 protection for the complete system. The flange is installed on the mounting unit. Due to the symmetrical design of the back of the panel, it is possible to install the mounting unit in 2 directions. If a flange is selected for mounting, flange output is possible towards the top or bottom.

A USB interface is available on the side of the mounting unit for service purposes.

- Protects the installed link module / system unit
- For swing arm mounting with flange
- USB 2.0 interface
- IP65 protection

4.2.3.2.2 Order data

Order number	Short description	Figure
	Mounting units	
5ACCMA00.0001-000	AP5000 swing arm mounting unit - 1x rear USB interface	
	Optional accessories	
	Flanges	
5ACCFL00.0000-000	AP5000 flange - Swing arm rotary flange - For swing arm mounting unit	
5ACCFL00.0100-000	AP5000 flange - Swivel-tilt flange for swing arm - For swing arm mounting unit	
5ACCFL00.0200-000	AP5000 flange - Swing arm flange adapter - For Rittal - For swing arm mounting unit	

4.2.3.2.3 Technical data

Information:

The following specified characteristic data, features and limit values are only valid for these individual components and may differ from those of the complete system. The data specified for the complete system applies to the complete system in which this individual component is used, for example.

Order number	5ACCMA00.0001-000
General information	
Certifications	
CE	Yes
UL	cULus E115267 Industrial control equipment
EAC	Product family certification
Interfaces	
USB	
Quantity	1
Type	USB 2.0
Variant	Type A
Transfer rate	Low speed (1.5 Mbit/s), full speed (12 Mbit/s) to high speed (30 Mbit/s)
Current-carrying capacity	Max. 500 mA
Operating conditions	
Pollution degree per EN 61131-2	Pollution degree 2
Degree of protection per EN 60529	IP65 [1)]
Degree of protection per UL 50	Type 4X indoor [1)]
Mechanical properties	
Housing	
Material	Aluminum, coated
Coating	White aluminum (similar to RAL 9006)
Installation	Swing arm (with flange)
Dimensions	
Width	280 mm
Height	259 mm
Depth	96 mm
Weight	2500 g

1) Only with proper installation on the panel and proper installation on the swing arm.

4.2.3.2.4 USB interface

The mounting unit is equipped with a USB 2.0 interface. This is equipped with a protective cover.

Caution!

IP65 protection can only be achieved if the USB protective cover is properly installed.

Warning!

USB peripheral devices can be connected to the USB interfaces. Due to the variety of USB devices available on the market, B&R cannot guarantee their functionality. The functionality of USB devices available from B&R is ensured.

Caution!

Due to the general PC specification, this interface must be handled with the utmost care with regard to EMC, cable routing, etc.

USB on mounting unit

The USB interface is available to the user for service purposes.

Information:

In the default configuration, the USB interface is the USB1 interface on the system unit; this can vary depending on the defined configuration.

USB on mounting unit		
Standard	USB 2.0	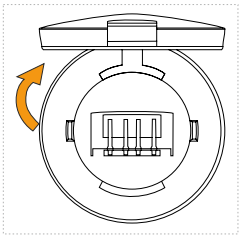
Variant	Type A, female	
Transfer rate	Low speed (1.5 Mbit/s)	
	Full speed (12 Mbit/s)	
	High speed (480 Mbit/s)[1]	
Current-carrying capacity[2]	Max. 0.5 A	
Cable length		
USB 2.0	<3 m (without hub)	
-		

1) In SDL operation without USB cable (mode 1), the USB transfer rate is limited to USB 1.1.
In SDL3 operation: Low speed (1.5 Mbit/s), full speed (12 Mbit/s) to high speed (30 Mbit/s)
In SDL4 operation: Low speed (1.5 Mbit/s), full speed (12 Mbit/s) to high speed (150 Mbit/s)

2) The USB interface is protected by a maintenance-free "USB current-limiting switch" (max. 0.5 A).

4.2.3.3 5ACCMA00.0002-000

4.2.3.3.1 General information

The mounting unit is installed on the back of the panel. It protects the installed link module / system unit, enabling IP65 protection for the complete system. The flange is installed on the mounting unit. Due to the symmetrical design of the back of the panel, it is possible to install the mounting unit in 2 directions. If a flange is selected for mounting, flange output is possible towards the top or bottom.

2 USB interfaces are available on the side of the mounting unit for service purposes.

- Protects the installed link module / system unit
- For swing arm mounting with flange
- 2x USB 2.0 interface
- IP65 protection

4.2.3.3.2 Order data

Order number	Short description	Figure
	Mounting units	
5ACCMA00.0002-000	AP5000 swing arm mounting unit - 2x rear USB interface	
	Optional accessories	
	Flanges	
5ACCFL00.0000-000	AP5000 flange - Swing arm rotary flange - For swing arm mounting unit	
5ACCFL00.0100-000	AP5000 flange - Swivel-tilt flange for swing arm - For swing arm mounting unit	
5ACCFL00.0200-000	AP5000 flange - Swing arm flange adapter - For Rittal - For swing arm mounting unit	

4.2.3.3.3 Technical data

Information:

The following specified characteristic data, features and limit values are only valid for these individual components and may differ from those of the complete system. The data specified for the complete system applies to the complete system in which this individual component is used, for example.

Order number	5ACCMA00.0002-000
General information	
Certifications	
CE	Yes
UL	cULus E115267 Industrial control equipment
EAC	Product family certification
Interfaces	
USB	
Quantity	2
Type	USB 2.0
Variant	Type A
Transfer rate	Low speed (1.5 Mbit/s), full speed (12 Mbit/s) to high speed (30 Mbit/s)
Current-carrying capacity	Max. 500 mA
Operating conditions	
Pollution degree per EN 61131-2	Pollution degree 2
Degree of protection per EN 60529	IP65 [1)]
Degree of protection per UL 50	Type 4X indoor [1)]
Mechanical properties	
Housing	
Material	Aluminum, coated
Coating	White aluminum (similar to RAL 9006)
Installation	Swing arm (with flange)
Dimensions	
Width	280 mm
Height	259 mm
Depth	96 mm
Weight	2500 g

1) Only with proper installation on the panel and proper installation on the swing arm.

4.2.3.3.4 USB interface

The mounting unit is equipped with 2 USB 2.0 interfaces. They are equipped with a protective cover.

Caution!

IP65 protection can only be achieved if the USB protective cover is properly installed.

Warning!

USB peripheral devices can be connected to the USB interfaces. Due to the variety of USB devices available on the market, B&R cannot guarantee their functionality. The functionality of USB devices available from B&R is ensured.

Caution!

Due to the general PC specification, this interface must be handled with the utmost care with regard to EMC, cable routing, etc.

USB on mounting unit

The USB interfaces are available to the user for service purposes.

Information:

In the default configuration, the USB interfaces are the USB1 and USB 2 interfaces on the system unit, though this can vary depending on the defined configuration.

USB on mounting unit		
Standard	USB 2.0	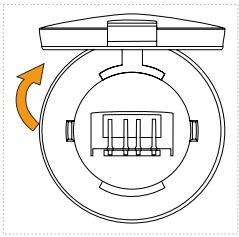
Variant	Type A, female	
Quantity	2	
Transfer rate	Low speed (1.5 Mbit/s)	
	Full speed (12 Mbit/s)	
	High speed (480 Mbit/s)[1]	
Current-carrying capacity[2]	Max. 0.5 A	
Cable length		
USB 2.0	<3 m (without hub)	
-		

1) In SDL operation without USB cable (mode 1), the USB transfer rate is limited to USB 1.1.
In SDL3 operation: Low speed (1.5 Mbit/s), full speed (12 Mbit/s) to high speed (30 Mbit/s)
In SDL4 operation: Low speed (1.5 Mbit/s), full speed (12 Mbit/s) to high speed (150 Mbit/s)

2) The USB interface is protected by a maintenance-free "USB current-limiting switch" (max. 0.5 A).

4.2.3.4 5ACCMA00.0100-000

4.2.3.4.1 General information

The mounting unit is installed on the back of the panel. It protects the installed link module / system unit.

- For installation with a 75 x 75 and 100 x 100 VESA mount
- Can also be installed when rotated 180°.
- IP54 protection

VESA IP54 5ACCMA00.010x-000 mounting units are approved for the following configurations:

AP5000 with system unit	5ACCMA00.010x-000
5PPC2100.BYxx-002 with heat pipe 5ACCHP00.0004-000	✓

Notice!

It is important to note that no cable grommets are included in delivery.

IP54 protection and UL Type 1 enclosure rating can only be ensured if appropriate cable grommets are ordered and installed. The cable grommet must be selected to match the cable diameter.

4.2.3.4.2 Order data

Order number	Short description	Figure
	Mounting units	 
5ACCMA00.0100-000	HMI mounting unit VESA IP54 - Leak tightness is only provided with suitable cable grommets.	
	Required accessories	
	Cable grommets	
5ACCCG00.0000-000	Cable grommet lens	
5ACCCG00.0304-000	Cable grommet 3-4 mm	
5ACCCG00.0405-000	Cable grommet 4-5 mm	
5ACCCG00.0506-000	Cable grommet 5-6 mm	
5ACCCG00.0607-000	Cable grommet 6-7 mm	
5ACCCG00.0708-000	Cable grommet 7-8 mm	
5ACCCG00.0809-000	Cable grommet 8-9 mm	
5ACCCG00.0910-000	Cable grommet 9-10 mm	
5ACCCG00.1011-000	Cable grommet 10-11 mm	
5ACCCG00.1112-000	Cable grommet 11-12 mm	
5ACCCG00.1213-000	Cable grommet 12-13 mm	
5ACCCG00.1314-000	Cable grommet 13-14 mm	
5ACCCG00.1415-000	Cable grommet 14-15 mm	
	Optional accessories	
	Heat pipe	
5ACCHP00.0004-000	AP5000 heat pipe - For PPC2100 (5PPC2100.BYxx-002) - For VESA mounting unit	

4.2.3.4.3 Technical data

Information:

The following specified characteristic data, features and limit values are only valid for these individual components and may differ from those of the complete system. The data specified for the complete system applies to the complete system in which this individual component is used, for example.

Order number	5ACCMA00.0100-000
General information	
Certifications	
CE	Yes
UL	cULus E115267 Industrial control equipment
Operating conditions	
Pollution degree per EN 61131-2	Pollution degree 2
Degree of protection per EN 60529	IP54 [1)]
Degree of protection per UL 50	Type 1 [1)]
Mechanical properties	
Housing	
Material	Aluminum, coated
Coating	White aluminum (similar to RAL 9006)
Installation	VESA

Order number	5ACCMA00.0100-000
Dimensions	
Width	280 mm
Length	259 mm
Height	60.25 mm
Weight	2.6 kg

1) Only with proper installation on the panel.

4.2.3.5 5ACCMA00.0101-000

4.2.3.5.1 General information

The mounting unit is installed on the back of the panel. It protects the installed link module / system unit.

- For installation with a 75 x 75 and 100 x 100 VESA mount
- Can also be installed when rotated 180°.
- USB connection routed externally.
- IP54 protection

VESA IP54 5ACCMA00.010x-000 mounting units are approved for the following configurations:

AP5000 with system unit	5ACCMA00.010x-000
5PPC2100.BYxx-002 with heat pipe 5ACCHP00.0004-000	✓

Notice!

It is important to note that no cable grommets are included in delivery.

IP54 protection and UL Type 1 enclosure rating can only be ensured if appropriate cable grommets are ordered and installed. The cable grommet must be selected to match the cable diameter.

4.2.3.5.2 Order data

Order number	Short description	Figure
	Mounting units	
5ACCMA00.0101-000	HMI mounting unit VESA IP54 w/USB - Leak tightness is only provided with suitable cable grommets.	
	Required accessories	
	Cable grommets	
5ACCCG00.0000-000	Cable grommet lens	
5ACCCG00.0304-000	Cable grommet 3-4 mm	
5ACCCG00.0405-000	Cable grommet 4-5 mm	
5ACCCG00.0506-000	Cable grommet 5-6 mm	
5ACCCG00.0607-000	Cable grommet 6-7 mm	
5ACCCG00.0708-000	Cable grommet 7-8 mm	
5ACCCG00.0809-000	Cable grommet 8-9 mm	
5ACCCG00.0910-000	Cable grommet 9-10 mm	
5ACCCG00.1011-000	Cable grommet 10-11 mm	
5ACCCG00.1112-000	Cable grommet 11-12 mm	
5ACCCG00.1213-000	Cable grommet 12-13 mm	
5ACCCG00.1314-000	Cable grommet 13-14 mm	
5ACCCG00.1415-000	Cable grommet 14-15 mm	
	Optional accessories	
	Heat pipe	
5ACCHP00.0004-000	AP5000 heat pipe - For PPC2100 (5PPC2100.BYxx-002) - For VESA mounting unit	

4.2.3.5.3 Technical data

Information:

The following specified characteristic data, features and limit values are only valid for these individual components and may differ from those of the complete system. The data specified for the complete system applies to the complete system in which this individual component is used, for example.

Order number	5ACCMA00.0101-000
General information	
Certifications	
CE	Yes
UL	cULus E115267 Industrial control equipment
Interfaces	
USB	
Quantity	1
Type	USB 2.0
Variant	Type A
Transfer rate	Low speed (1.5 Mbit/s), full speed (12 Mbit/s) to high speed (30 Mbit/s)
Current-carrying capacity	Max. 500 mA
Operating conditions	
Pollution degree per EN 61131-2	Pollution degree 2
Degree of protection per EN 60529	IP54 [1)]

Order number	5ACCMA00.0101-000
Degree of protection per UL 50	Type 1 [1]
Mechanical properties	
Housing	
Material	Aluminum, coated
Coating	White aluminum (similar to RAL 9006)
Installation	VESA
Dimensions	
Width	280 mm
Length	259 mm
Height	60.25 mm
Weight	2.6 kg

1) Only with proper installation on the panel.

4.2.3.5.4 USB interface

The mounting unit is equipped with a USB 2.0 interface. This is equipped with a protective cover.

Caution!

IP54 protection can only be achieved if the USB protective cover is properly installed.

Warning!

USB peripheral devices can be connected to the USB interfaces. Due to the variety of USB devices available on the market, B&R cannot guarantee their functionality. The functionality of USB devices available from B&R is ensured.

Caution!

Due to the general PC specification, this interface must be handled with the utmost care with regard to EMC, cable routing, etc.

USB on mounting unit

The USB interface is available to the user for service purposes.

Information:

In the default configuration, the USB interface is the USB1 interface on the system unit; this can vary depending on the defined configuration.

USB on mounting unit		
Standard	USB 2.0	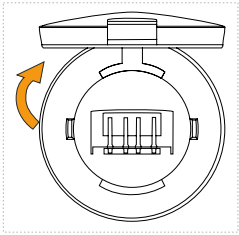
Variant	Type A, female	
Transfer rate	Low speed (1.5 Mbit/s)	
	Full speed (12 Mbit/s)	
	High speed (480 Mbit/s)[1]	
Current-carrying capacity[2]	Max. 0.5 A	
Cable length		
USB 2.0	<3 m (without hub)	
-		

1) In SDL operation without USB cable (mode 1), the USB transfer rate is limited to USB 1.1.
In SDL3 operation: Low speed (1.5 Mbit/s), full speed (12 Mbit/s) to high speed (30 Mbit/s)
In SDL4 operation: Low speed (1.5 Mbit/s), full speed (12 Mbit/s) to high speed (150 Mbit/s)

2) The USB interface is protected by a maintenance-free "USB current-limiting switch" (max. 0.5 A).

4.2.3.6 5ACCMA01.0100-000

4.2.3.6.1 General information

The mounting unit is installed on the back of the panel. It protects the installed link module / system unit. The VESA bracket is installed on the mounting unit. If a VESA bracket is selected for mounting, VESA 100 or VESA 75 installation is possible.

- Protects the installed link module / system unit
- For installation with VESA bracket
- IP20 protection with 5AP5120.xxxx-000
- IP10 protection with 5AP5130.xxxx-000 and 5AP5230.xxxx-000

4.2.3.6.2 Order data

Order number	Short description	Figure
	Mounting units	
5ACCMA01.0100-000	AP5000 VESA mounting unit IP10/IP20 - IP20 with 5AP5120.*-000 - IP10 with 5AP5130.*-000, 5AP5230.*-000	

4.2.3.6.3 Technical data

Information:

The following specified characteristic data, features and limit values are only valid for these individual components and may differ from those of the complete system. The data specified for the complete system applies to the complete system in which this individual component is used, for example.

Order number	5ACCMA01.0100-000
General information	
Certifications	
CE	Yes
UL	cULus E115267 Industrial control equipment
EAC	Product family certification
Operating conditions	
Pollution degree per EN 61131-2	Pollution degree 2
Degree of protection per EN 60529	IP10 [1]
Degree of protection per UL 50	Type 1 [1]
Mechanical properties	
Housing	
Material	Aluminum, coated
Coating	White aluminum (similar to RAL 9006)
Installation	VESA
Dimensions	
Width	270 mm
Height	189 mm
Depth	51 mm
Weight	900 g

1) Only with proper installation on the panel.

4.2.4 CFast cards

For detailed information about compatible CFast cards, see the aggregate data sheet for CFast cards on the B&R website.

4.2.5 Interface options

Information:

It is important to note that not every interface option can be connected to interface slot IF1 and IFx. For additional information, see section "IF option slot(IF1, IFx)" on page 55.

Information:

Interface options can only be installed and replaced at the B&R factory.

4.2.5.1 5ACCIF01.FPCC-000

4.2.5.1.1 General information

Interface option 5ACCIF01.FPCC-000 is equipped with a POWERLINK interface, 2 CAN bus master interfaces and an X2X Link master interface. In addition, 512 kB nvSRAM is installed.

- 1x POWERLINK interface managing or controlled node
- 2x CAN bus master interfaces
- 1x X2X Link master interface
- 512 kB nvSRAM
- Compatible with APC2100/PPC2100 and APC2200/PPC2200

This interface option can only be operated with Automation Runtime.

4.2.5.1.2 Order data

Order number	Short description	Figure
	Interface options	
5ACCIF01.FPCC-000	Interface card - 2x CAN interfaces - 1x X2X Link interface - 1x POWERLINK interface - 512 kB nvSRAM - For APC2100/PPC2100/APC2200/PPC2200 - Only available with a new device	
	Optional accessories	
	Terminal blocks	
0TB1210.3100	Connector 300 VDC - 10-pin female - Cage clamp terminal block - Protected against vibration by the screw flange	

4.2.5.1.3 Technical data

Information:

The following specified characteristic data, features and limit values are only valid for this accessory and may differ from those of the complete system. The data specified for the complete system applies to the complete system in which this accessory is installed, for example.

Order number	5ACCIF01.FPCC-000
General information	
LEDs	L1, L2, L3
B&R ID code	0xE9BD
Certifications	
CE	Yes
UL	cULus E115267 Industrial control equipment
HazLoc	cULus HazLoc E180196 Industrial control equipment for hazardous locations Class I, Division 2, Groups ABCD, T4 [1]
DNV	Temperature: **B** (0 - 55°C) Humidity: **B** (up to 100%) Vibration: **A** (0.7 g) EMC: **B** (bridge and open deck) [2]
EAC	Product family certification
Controller	
nvSRAM	
Size	512 kB
Data retention	20 years
Read/Write endurance	Min. 1,000,000
Remanent variables in power failure mode	256 kB (for e.g. Automation Runtime, see Automation Help)

Order number	5ACCIF01.FPCC-000
Interfaces	
POWERLINK	
Quantity	1
Type	Type 4 [3]
Variant	RJ45, shielded
Transfer rate	100 Mbit/s
Transfer	100BASE-TX
Line length	Max. 100 m between two stations (segment length)
CAN	
Quantity	2
Variant	10-pin, male [4]
Transfer rate	Max. 1 Mbit/s
Terminating resistor	
Type	Can be switched on and off with slide switch [5]
Default setting	Each off
X2X	
Type	X2X Link master
Quantity	1
Variant	10-pin, male, galvanically isolated
Electrical properties	
Power consumption	2 W
Operating conditions	
Pollution degree per EN 61131-2	Pollution degree 2
Ambient conditions	
Temperature	
Operation	-20 to 55°C
Storage	-20 to 60°C
Transport	-20 to 60°C
Relative humidity	
Operation	5 to 90%, non-condensing
Storage	5 to 95%, non-condensing
Transport	5 to 95%, non-condensing
Mechanical properties	
Weight	25 g

1) Yes, but applies only if all components installed in the complete system have this certification and the complete system bears the corresponding mark.
2) Yes, but applies only if all components installed in the complete system have this certification and are listed on the associated DNV certificate for the product family.
3) For additional information, see Automation Help (**Communication / POWERLINK / General information / Hardware - IF / LS**).
4) CAN1: Galvanically isolated.
CAN2: Not galvanically isolated.
5) The terminating resistor can only be switched on/off for the CAN1 interface.

4.2.5.1.3.1 POWERLINK interface - Pinout

The POWERLINK interface on the system unit is referred to as "IF1".

POWERLINK - IF1[1][2]		
Variant	RJ45, female	
Wiring	S/STP (Cat 5e)	
Cable length	Max. 100 m (min. Cat 5e)	
LED status indicator (b)	**On**	**Off**
Green	see "LED "S/E" (LED "Status/Error")" on page 290	
LED "Link" (a)	**On**	**Active**
Yellow	Link (a connection to a POWERLINK network exists)	Blinking (data being transferred)

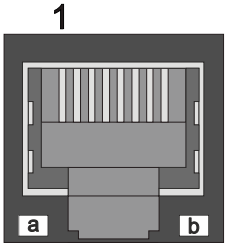

1) The interfaces, etc. available on the device or module have been numbered for the purpose of clear differentiation. This numbering may deviate from the numbering used by the respective operating system, however.
2) In Automation Studio / Automation Runtime, this interface is referred to as IF1.

4.2.5.1.3.2 CAN bus 1 interface - Pinout

The CAN bus 1 interface on the system unit is referred to as "IFx".

A terminating resistor can be switched on or off for the CAN bus 1 interface. LED status indicator "L1" indicates whether the terminating resistor is switched on or off.

CAN bus 1 - IFx[1)2)]		
Variant	10-pin, male	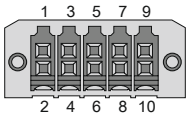
Galvanic isolation	Yes	
Transfer rate	Max. 1 Mbit/s	
Bus length	Max. 1000 m	
Pin	**Pinout**	
1	-	
2	Shield	
3	-	
4	-	
5	CAN H	
6	CAN L	
7	CAN GND	
8	-	
9	-	
10	-	

1) The interfaces, etc. available on the device or module have been numbered for the purpose of clear differentiation. This numbering may deviate from the numbering used by the respective operating system, however.
2) This interface can only be used in Automation Runtime and is displayed as IF3 in Automation Studio / Automation Runtime. It is not a "PC interface" and therefore not displayed in BIOS.

CAN driver settings

The baud rate can be set either with predefined values or via the bit timing register.
For additional information about CAN interfaces with AS/AR support, see Automation Help. For additional information about CAN interfaces without AS/AR support, see the user's manual for the B&R CAN driver at www.br-automation.com.

Bit timing register 0	Bit timing register 1	Baud rate
00h	14h	1000 kbit/s
80h or 00h	1Ch	500 kbit/s
81h or 01h	1Ch	250 kbit/s
83h or 03h	1Ch	125 kbit/s
84h or 04h	1Ch	100 kbit/s
89h or 09h	1Ch	50 kbit/s

CAN1 - Bus length and cable type

The type of cable to be used depends largely on the required bus length and number of nodes. The bus length is determined by the transfer rate. Per CiA (CAN in Automation), the maximum bus length is 1000 meters.

The following bus lengths are permitted at a maximum permissible oscillator tolerance of 0.121%:

Bus length[1)]	Transfer rate
≤1000 m	Typ. 50 kbit/s
≤200 m	Typ. 250 kbit/s
≤100 m	Typ. 500 kbit/s
≤20 m[2)]	Typ. 1 Mbit/s
≤15 m[3)]	

1) The specified cable length is only valid with the values specified in "CAN driver settings". Cable lengths otherwise depend on the values in the bit timing register, cable quality and number of nodes.
2) For CAN interfaces without galvanic isolation and 5ACCIF01.ICAN-000.
3) For CAN interfaces with galvanic isolation.

Preferably, the cable material used should have the following properties or deviate only slightly from them in order to achieve an optimal transfer rate.

CAN cable		Property
Signal line		
	Cable cross section	2x 0.25 mm² (24AWG/19), tinned copper stranded wire
	Wire insulation	PE
	Conductor resistance	≤82 Ω/km
	Stranding	Wires stranded in pairs
	Shield	Pair shielding with aluminum foil
GND		
	Cable cross section	1x 0.34 mm² (22AWG/19), tinned copper stranded wire
	Wire insulation	PE
	Conductor resistance	≤59 Ω/km
Outer jacket		
	Material	PUR compound
	Properties	Halogen-free
	Cable shield	Tinned copper wire

Terminating resistor

A terminating resistor is integrated on the interface option. A switch is used to switch the terminating resistor for the CAN bus 1 interface on and off. The terminating resistor cannot be switched on and off for the CAN bus 2 interface. LED status indicator "L1" indicates whether the terminating resistor of the CAN bus 1 interface is switched on or off.

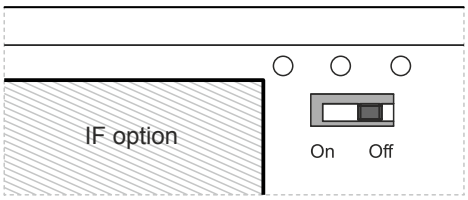

- ON: Switched on
- OFF (default): Switched off

4.2.5.1.3.3 CAN bus 2 interface - Pinout

The CAN bus 2 interface on the system unit is referred to as "IFx".

The terminating resistor cannot be switched on and off for the CAN bus 2 interface. A terminating resistor must therefore be taken into account during wiring.

CAN bus 2 - IFx[1)2)]		
Variant	10-pin, male	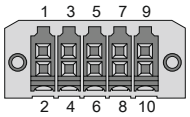
Galvanic isolation	No	
Transfer rate	Max. 1 Mbit/s	
Bus length	Max. 1000 m	
Pin	**Pinout**	
1	-	
2	Shield	
3	-	
4	-	
5	-	
6	-	
7	-	
8	CAN GND	
9	CAN L	
10	CAN H	

1) The interfaces, etc. available on the device or module have been numbered for the purpose of clear differentiation. This numbering may deviate from the numbering used by the respective operating system, however.

2) This interface can only be used in Automation Runtime and is displayed as IF4 in Automation Studio / Automation Runtime. It is not a "PC interface" and therefore not displayed in BIOS.

CAN driver settings

The baud rate can be set either with predefined values or via the bit timing register.
For additional information about CAN interfaces with AS/AR support, see Automation Help. For additional information about CAN interfaces without AS/AR support, see the user's manual for the B&R CAN driver at www.br-automation.com.

Bit timing register 0	Bit timing register 1	Baud rate
00h	14h	1000 kbit/s
80h or 00h	1Ch	500 kbit/s
81h or 01h	1Ch	250 kbit/s
83h or 03h	1Ch	125 kbit/s
84h or 04h	1Ch	100 kbit/s
89h or 09h	1Ch	50 kbit/s

CAN2 - Bus length and cable type

The type of cable to be used depends largely on the required bus length and number of nodes. The bus length is determined by the transfer rate. Per CiA (CAN in Automation), the maximum bus length is 1000 meters.

The following bus lengths are permitted at a maximum permissible oscillator tolerance of 0.121%:

Bus length[1)]	Transfer rate
≤1000 m	Typ. 50 kbit/s
≤200 m	Typ. 250 kbit/s
≤100 m	Typ. 500 kbit/s
≤20 m[2)]	Typ. 1 Mbit/s
≤15 m[3)]	

1) The specified cable length is only valid with the values specified in "CAN driver settings". Cable lengths otherwise depend on the values in the bit timing register, cable quality and number of nodes.
2) For CAN interfaces without galvanic isolation and 5ACCIF01.ICAN-000.
3) For CAN interfaces with galvanic isolation.

Preferably, the cable material used should have the following properties or deviate only slightly from them in order to achieve an optimal transfer rate.

CAN cable		Property
Signal line		
	Cable cross section	2x 0.25 mm² (24AWG/19), tinned copper stranded wire
	Wire insulation	PE
	Conductor resistance	≤82 Ω/km
	Stranding	Wires stranded in pairs
	Shield	Pair shielding with aluminum foil
GND		
	Cable cross section	1x 0.34 mm² (22AWG/19), tinned copper stranded wire
	Wire insulation	PE
	Conductor resistance	≤59 Ω/km
Outer jacket		
	Material	PUR compound
	Properties	Halogen-free
	Cable shield	Tinned copper wire

4.2.5.1.3.4 X2X Link master interface - Pinout

The X2X Link master interface on the system unit is referred to as "IFx".

X2X Link master - IFx[1)2)]		
Variant	10-pin, male	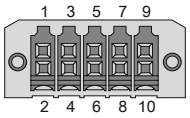
Galvanic isolation	Yes	
Pin	**Pinout**	
1	X2X	
2	Shield	
3	X2X\	
4	X2X⊥	
5	-	
6	-	
7	-	
8	-	
9	-	
10	-	

1) The interfaces, etc. available on the device or module have been numbered for the purpose of clear differentiation. This numbering may deviate from the numbering used by the respective operating system, however.
2) This interface can only be used in Automation Runtime and is displayed as IF2 in Automation Studio / Automation Runtime. It is not a "PC interface" and therefore not displayed in BIOS.

4.2.5.1.3.5 LED status indicators L1, L2, L3

The LEDs of the interface option are located near the ETH1 interface.

LED status indicators			
LED	**Color**	**Status**	**Explanation**
L1	Yellow	On	The CAN bus 1 terminating resistor is switched on.
		Off	The CAN bus 1 terminating resistor is switched off.
L2	Green	On	POWERLINK link LED A connection to a POWERLINK network exists.
		Blinking	POWERLINK link LED Data is being transferred.
L3	Green-Red	On	POWERLINK status/error LED See "LED "S/E" (LED "Status/Error")" on page 290.
		Off	POWERLINK status/error LED See "LED "S/E" (LED "Status/Error")" on page 290.

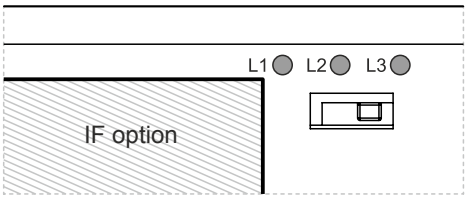

POWERLINK commissioning and operation

For a description of the operating modes, status and node numbers of the POWERLINK interface(s), see "LED "S/E" (LED "Status/Error")" on page 290.

4.2.5.1.4 Shielding

For the interfaces on the 10-pin female connector, the shield of the interfaces can be connected to pin *Shield* (pin 2) of the female connector.

In addition, there is a functional ground connection on the interface cover of the system unit and a screw point for cable shields that can also be used for the shielded cables.

4.2.5.1.5 Driver support and firmware update

The driver is part of the Automation Runtime and the firmware is part of Automation Studio. The module is automatically brought up to this level.

To update the firmware contained in Automation Studio, a hardware upgrade must be performed (see **Project management / Workspace / Upgrades** in Automation Help).

4.2.5.2 5ACCIF01.FPCS-000

4.2.5.2.1 General information

Interface option 5ACCIF01.FPCS-000 is equipped with a POWERLINK, RS485 and CAN bus master interface. In addition, 32 kB FRAM is installed.

- 1x POWERLINK interface managing or controlled node
- 1x CAN bus master interface
- 1x RS485 interface
- 32 kB FRAM
- Compatible with APC2100/PPC2100 and APC2200/PPC2200

This interface option can only be operated with Automation Runtime.

4.2.5.2.2 Order data

Order number	Short description	Figure
	Interface options	
5ACCIF01.FPCS-000	Interface card - 1x RS485 interface - 1x CAN interface - 1x POWERLINK interface - 32 kB FRAM - For APC2100/PPC2100/APC2200/PPC2200 - Only available with a new device	
	Optional accessories	
	Terminal blocks	
0TB1210.3100	Connector 300 VDC - 10-pin female - Cage clamp terminal block - Protected against vibration by the screw flange	

4.2.5.2.3 Technical data

Information:

The following specified characteristic data, features and limit values are only valid for this accessory and may differ from those of the complete system. The data specified for the complete system applies to the complete system in which this accessory is installed, for example.

Order number	5ACCIF01.FPCS-000
General information	
LEDs	L1, L2, L3
B&R ID code	0xED7C
Certifications	
CE	Yes
UL	cULus E115267 Industrial control equipment
HazLoc	cULus HazLoc E180196 Industrial control equipment for hazardous locations Class I, Division 2, Groups ABCD, T4 [1)]
DNV	Temperature: **B** (0 - 55°C) Humidity: **B** (up to 100%) Vibration: **A** (0.7 g) EMC: **B** (bridge and open deck) [2)]
EAC	Product family certification
Controller	
FRAM	
Size	32 kB
Data retention	10 years
Read/Write endurance	Min. 10^{12} times/byte
Remanent variables in power failure mode	32 kB (for e.g. Automation Runtime, see Automation Help)
Interfaces	
COM	
Quantity	1
Type	RS485, not galvanically isolated
Variant	10-pin, male
UART	16550-compatible, 16-byte FIFO buffer
Max. baud rate	115 kbit/s
POWERLINK	
Quantity	1
Type	Type 4 [3)]
Variant	RJ45, shielded
Transfer rate	100 Mbit/s
Transfer	100BASE-TX
Line length	Max. 100 m between two stations (segment length)

Order number	5ACCIF01.FPCS-000
CAN	
Quantity	1
Variant	10-pin, male, not galvanically isolated
Transfer rate	Max. 1 Mbit/s
Terminating resistor	
Type	Can be switched on and off with slide switch
Default setting	Off
Electrical properties	
Power consumption	1.75 W
Operating conditions	
Pollution degree per EN 61131-2	Pollution degree 2
Ambient conditions	
Temperature	
Operation	-20 to 55°C
Storage	-20 to 60°C
Transport	-20 to 60°C
Relative humidity	
Operation	5 to 90%, non-condensing
Storage	5 to 95%, non-condensing
Transport	5 to 95%, non-condensing
Mechanical properties	
Weight	25 g

1) Yes, but applies only if all components installed in the complete system have this certification and the complete system bears the corresponding mark.
2) Yes, but applies only if all components installed in the complete system have this certification and are listed on the associated DNV certificate for the product family.
3) For additional information, see Automation Help (**Communication / POWERLINK / General information / Hardware - IF / LS**).

4.2.5.2.3.1 POWERLINK interface - Pinout

The POWERLINK interface on the system unit is referred to as "IF1".

POWERLINK - IF1[1)2)]		
Variant	RJ45, female	
Wiring	S/STP (Cat 5e)	
Cable length	Max. 100 m (min. Cat 5e)	
LED status indicator (b)	**On**	**Off**
Green	See status/error LED.	
LED "Link" (a)	**On**	**Active**
Yellow	Link (a connection to a POWERLINK network exists)	Blinking (data being transferred)

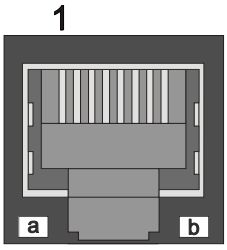

1) The interfaces, etc. available on the device or module have been numbered for the purpose of clear differentiation. This numbering may deviate from the numbering used by the respective operating system, however.
2) In Automation Studio / Automation Runtime, this interface is referred to as IF1.

4.2.5.2.3.2 Serial interface COM - Pinout

Serial interface COM on the system unit is referred to as "IFx".

Serial interface COM - IFx[1)2)]	
	RS485
Variant	10-pin, male
Type	RS485
Galvanic isolation	No
UART	16550-compatible, 16-byte FIFO buffer
Transfer rate	Max. 115 kbit/s
Bus length	Max. 1200 m
Pin	**Pinout**
1	-
2	Shield
3	-
4	-
5	-
6	-
7	-
8	COM GND
9	DATA\
10	DATA

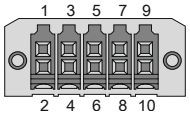

1) The interfaces, etc. available on the device or module have been numbered for the purpose of clear differentiation. This numbering may deviate from the numbering used by the respective operating system, however.
2) This interface can only be used in Automation Runtime and is displayed as IF7 in Automation Studio / Automation Runtime. It is not a "PC interface" and therefore not displayed in BIOS.

The RTS line must be switched by the driver for each transmission or reception; switching back does not take place automatically.

With long cable lengths, the voltage drop can result in greater potential differences between the bus devices, which can hinder communication. This can be improved by running the ground wire with the others.

Cable data

For more detailed information about the transfer rate, bus length or cable requirements for the respective interfaces/buses, see "Cable data" on page 288.

4.2.5.2.3.3 CAN bus interface - Pinout

The CAN bus interface on the system unit is referred to as "IFx".

CAN bus - IFx[1)2)]	
Variant	10-pin, male
Galvanic isolation	No
Transfer rate	Max. 1 Mbit/s
Bus length	Max. 1000 m
Pin	**Pinout**
1	-
2	Shield
3	-
4	-
5	CAN H
6	CAN L
7	CAN GND
8	-
9	-
10	-

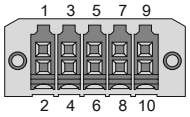

1) The interfaces, etc. available on the device or module have been numbered for the purpose of clear differentiation. This numbering may deviate from the numbering used by the respective operating system, however.
2) This interface can only be used in Automation Runtime and is displayed as IF3 in Automation Studio / Automation Runtime. It is not a "PC interface" and therefore not displayed in BIOS.

CAN driver settings

The baud rate can be set either with predefined values or via the bit timing register.
For additional information about CAN interfaces with AS/AR support, see Automation Help. For additional information about CAN interfaces without AS/AR support, see the user's manual for the B&R CAN driver at www.br-automation.com.

Bit timing register 0	Bit timing register 1	Baud rate
00h	14h	1000 kbit/s
80h or 00h	1Ch	500 kbit/s
81h or 01h	1Ch	250 kbit/s
83h or 03h	1Ch	125 kbit/s
84h or 04h	1Ch	100 kbit/s
89h or 09h	1Ch	50 kbit/s

Cable data

For more detailed information about the transfer rate, bus length or cable requirements for the respective interfaces/buses, see "Cable data" on page 288.

Terminating resistor

A terminating resistor is integrated on the interface option. It is switched on or off for the CAN bus interface with a switch. LED status indicator L1 indicates the current state:

- ON: Activated
- OFF (default): Switched off

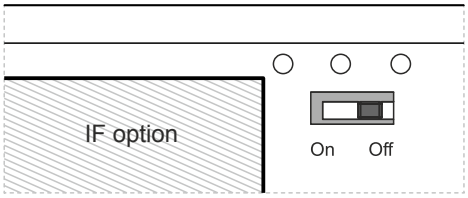

4.2.5.2.3.4 LED status indicators

The LEDs of the interface option are located near the ETH1 interface.

LED status indicators			
LED	**Color**	**Status**	**Explanation**
L1	Yellow	On	The CAN bus terminating resistor is switched on.
		Off	The CAN bus terminating resistor is switched off.
L2	Green	On	POWERLINK link LED A connection to a POWERLINK network exists.
		Blinking	POWERLINK link LED Data is being transferred.
L3	Green-Red	On	POWERLINK status/error LED See "LED "S/E" (LED "Status/Error")" on page 290.
		Off	POWERLINK status/error LED See "LED "S/E" (LED "Status/Error")" on page 290.

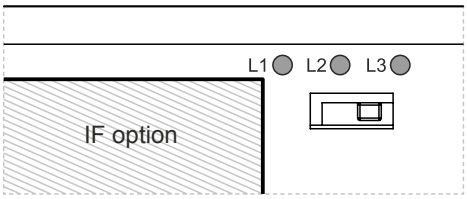

POWERLINK commissioning and operation

For a description of the operating modes, status and node numbers of the POWERLINK interface(s), see "LED "S/E" (LED "Status/Error")" on page 290.

4.2.5.2.4 Shielding

For the interfaces on the 10-pin female connector, the shield of the interfaces can be connected to pin *Shield* (pin 2) of the female connector.

In addition, there is a functional ground connection on the interface cover of the system unit and a screw point for cable shields that can also be used for the shielded cables.

4.2.5.2.5 Driver support and firmware update

The driver is part of the Automation Runtime and the firmware is part of Automation Studio. The module is automatically brought up to this level.

To update the firmware contained in Automation Studio, a hardware upgrade must be performed (see **Project management / Workspace / Upgrades** in Automation Help).

4.2.5.3 5ACCIF01.FPLK-000

4.2.5.3.1 General information

Interface option 5ACCIF01.FPLK-000 is equipped with 2 female RJ45 connectors; both connectors are connected to an integrated POWERLINK hub. In addition, 512 kB nvSRAM is installed.

With the integrated 2-port hub, a simple tree structure, daisy chain wiring or optional ring redundancy can be easily implemented without additional effort.

With poll-response chaining (PRC), the IF option offers a solution for the highest demands on response time and the shortest cycle times. Especially for central control tasks, poll-response chaining in combination with the B&R control system provides ideal performance.

- 1x POWERLINK interface for real-time communication
- 512 kB nvSRAM
- Integrated hub for economical wiring
- Configurable ring redundancy
- Poll-response chaining
- Compatible with APC2100/PPC2100 and APC2200/PPC2200

This interface option can only be operated with Automation Runtime.

Information:

Ring redundancy in combination with poll-response chaining is not possible at the same time with this IF option.

4.2.5.3.2 Order data

Order number	Short description	Figure
	Interface options	
5ACCIF01.FPLK-000	Interface card - 1x POWERLINK interface - Integrated 2-port hub - 512 kB nvSRAM - For APC2100/PPC2100/APC2200/PPC2200 - Only available with a new device	

4.2.5.3.3 Technical data

Information:

The following specified characteristic data, features and limit values are only valid for this accessory and may differ from those of the complete system. The data specified for the complete system applies to the complete system in which this accessory is installed, for example.

Order number	5ACCIF01.FPLK-000
General information	
LEDs	L1, L2, L3
B&R ID code	0xE9BA
Certifications	
CE	Yes
UL	cULus E115267 Industrial control equipment
HazLoc	cULus HazLoc E180196 Industrial control equipment for hazardous locations Class I, Division 2, Groups ABCD, T4 [1)]
EAC	Product family certification
Controller	
nvSRAM	
Size	512 kB
Data retention	20 years
Read/Write endurance	Min. 1,000,000
Remanent variables in power failure mode	256 kB (for e.g. Automation Runtime, see Automation Help)

Order number	5ACCIF01.FPLK-000
Interfaces	
POWERLINK	
Quantity	1 (integrated 2-port hub)
Type	Type 4, redundant [2]
Variant	RJ45, shielded
Transfer rate	100 Mbit/s
Transfer	100BASE-TX
Line length	Max. 100 m between two stations (segment length)
Electrical properties	
Power consumption	1.75 W
Operating conditions	
Pollution degree per EN 61131-2	Pollution degree 2
Ambient conditions	
Temperature	
Operation	-20 to 55°C
Storage	-20 to 60°C
Transport	-20 to 60°C
Relative humidity	
Operation	5 to 90%, non-condensing
Storage	5 to 95%, non-condensing
Transport	5 to 95%, non-condensing
Mechanical properties	
Weight	25 g

1) Yes, but applies only if all components installed in the complete system have this certification and the complete system bears the corresponding mark.
2) For additional information, see Automation Help (**Communication / POWERLINK / General information / Hardware - IF / LS**).

4.2.5.3.3.1 POWERLINK 1 interface - Pinout

The POWERLINK 1 interface on the system unit is referred to as "IF1".

POWERLINK 1 - IF1[1]		
Variant	RJ45, female	
Wiring	S/STP (Cat 5e)	
Cable length	Max. 100 m (min. Cat 5e)	
LED status indicator (b)	**On**	**Off**
Green	See status/error LED.	
LED "Link" (a)	**On**	**Active**
Yellow	Link (a connection to a POWERLINK network exists)	Blinking (data being transferred)

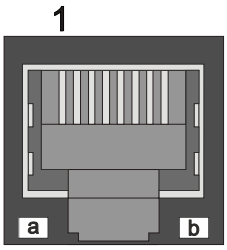

1) The interfaces, etc. available on the device or module have been numbered for the purpose of clear differentiation. This numbering may deviate from the numbering used by the respective operating system, however.

4.2.5.3.3.2 POWERLINK 2 interface - Pinout

The POWERLINK 2 interface on the system unit is referred to as "IFx".

POWERLINK 2 - IFx[1]		
Variant	RJ45, female	
Wiring	S/STP (Cat 5e)	
Cable length	Max. 100 m (min. Cat 5e)	
LED status indicator (b)	**On**	**Off**
Green	See status/error LED.	
LED "Link" (a)	**On**	**Active**
Yellow	Link (a connection to a POWERLINK network exists)	Blinking (data being transferred)

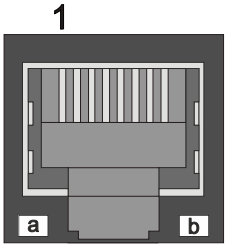

1) The interfaces, etc. available on the device or module have been numbered for the purpose of clear differentiation. This numbering may deviate from the numbering used by the respective operating system, however.

4.2.5.3.3.3 LED status indicators L1, L2, L3

The LEDs of the interface option are located near the ETH1 interface.

LED status indicators			
LED	**Color**	**Status**	**Explanation**
L1	Green	On	POWERLINK 2 link LED A connection to a POWERLINK network exists.
		Blinking	POWERLINK 2 link LED Data is being transferred.
L2	Green	On	POWERLINK 1 link LED A connection to a POWERLINK network exists.
		Blinking	POWERLINK 1 link LED Data is being transferred.
L3	Green-Red	On	POWERLINK status/error LED See "LED "S/E" (LED "Status/Error")" on page 290.
		Off	POWERLINK status/error LED See "LED "S/E" (LED "Status/Error")" on page 290.

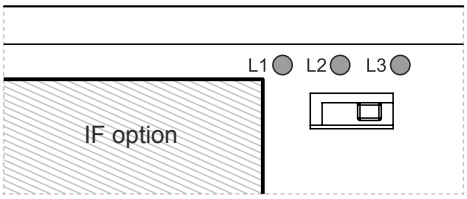

POWERLINK commissioning and operation

For a description of the operating modes, status and node numbers of the POWERLINK interface(s), see "LED "S/E" (LED "Status/Error")" on page 290.

4.2.5.3.4 Driver support and firmware update

The driver is part of the Automation Runtime and the firmware is part of Automation Studio. The module is automatically brought up to this level.

To update the firmware contained in Automation Studio, a hardware upgrade must be performed (see **Project management / Workspace / Upgrades** in Automation Help).

4.2.5.4 5ACCIF01.FPLS-000

4.2.5.4.1 General information

Interface option 5ACCIF01.FPLS-000 is equipped with a POWERLINK and RS232 interface. In addition, 32 kB FRAM is installed.

- 1x POWERLINK interface managing or controlled node
- 1x RS232 interface
- 32 kB FRAM
- Compatible with APC2100/PPC2100 and APC2200/PPC2200

4.2.5.4.2 Order data

Order number	Short description	Figure
	Interface options	
5ACCIF01.FPLS-000	Interface card - 1x RS232 interface - 1x POWERLINK interface - 32 kB FRAM - For APC2100/PPC2100/APC2200/PPC2200 - Only available with a new device	
	Optional accessories	
	Terminal blocks	
0TB1210.3100	Connector 300 VDC - 10-pin female - Cage clamp terminal block - Protected against vibration by the screw flange	

4.2.5.4.3 Technical data

Information:

The following specified characteristic data, features and limit values are only valid for this accessory and may differ from those of the complete system. The data specified for the complete system applies to the complete system in which this accessory is installed, for example.

Order number	5ACCIF01.FPLS-000
General information	
LEDs	L2, L3
B&R ID code	0xE540
Certifications	
CE	Yes
UL	cULus E115267 Industrial control equipment
HazLoc	cULus HazLoc E180196 Industrial control equipment for hazardous locations Class I, Division 2, Groups ABCD, T4 [1)]
DNV	Temperature: **B** (0 - 55°C) Humidity: **B** (up to 100%) Vibration: **A** (0.7 g) EMC: **B** (bridge and open deck) [2)]
EAC	Product family certification
Controller	
FRAM	
Size	32 kB
Data retention	10 years
Read/Write endurance	Min. 10^{12} times/byte
Remanent variables in power failure mode	32 kB (for e.g. Automation Runtime, see Automation Help)
Interfaces	
COM	
Quantity	1
Type	RS232, modem supported, not galvanically isolated
Variant	10-pin, male
UART	16550-compatible, 16-byte FIFO buffer
Max. baud rate	115 kbit/s
POWERLINK	
Quantity	1
Type	Type 4 [3)]
Variant	RJ45, shielded
Transfer rate	100 Mbit/s
Transfer	100BASE-TX
Line length	Max. 100 m between two stations (segment length)
Electrical properties	
Power consumption	1.5 W
Operating conditions	
Pollution degree per EN 61131-2	Pollution degree 2

Order number	5ACCIF01.FPLS-000
Ambient conditions	
Temperature	
Operation	-20 to 55°C
Storage	-20 to 60°C
Transport	-20 to 60°C
Relative humidity	
Operation	5 to 90%, non-condensing
Storage	5 to 95%, non-condensing
Transport	5 to 95%, non-condensing
Mechanical properties	
Weight	25 g

1) Yes, but applies only if all components installed in the complete system have this certification and the complete system bears the corresponding mark.
2) Yes, but applies only if all components installed in the complete system have this certification and are listed on the associated DNV certificate for the product family.
3) For additional information, see Automation Help (**Communication / POWERLINK / General information / Hardware - IF / LS**).

4.2.5.4.3.1 POWERLINK interface - Pinout

The POWERLINK interface on the system unit is referred to as "IF1".

POWERLINK - IF1[1)2)]		
Variant	RJ45, female	
Wiring	S/STP (Cat 5e)	
Cable length	Max. 100 m (min. Cat 5e)	
LED status indicator (b)	**On**	**Off**
Green	See status/error LED.	
LED "Link" (a)	**On**	**Active**
Yellow	Link (a connection to a POWERLINK network exists)	Blinking (data being transferred)

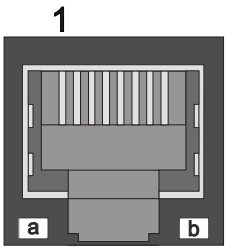

1) The interfaces, etc. available on the device or module have been numbered for the purpose of clear differentiation. This numbering may deviate from the numbering used by the respective operating system, however.
2) In Automation Studio / Automation Runtime, this interface is referred to as IF1.

4.2.5.4.3.2 Serial interface COMA - Pinout

Serial interface COMA on the system unit is referred to as "IFx".

Serial interface COMA - IFx[1)2)3)]	
	RS232
Variant	10-pin, male
Type	RS232, modem supported
Galvanic isolation	No
UART	16550-compatible, 16-byte FIFO buffer
Transfer rate	Max. 115 kbit/s
Bus length	Max. 15 m
Pin	**Pinout**
1	DCD
2	DSR
3	RXD
4	RTS
5	TXD
6	CTS
7	DTR
8	RI
9	GND
10	Shield

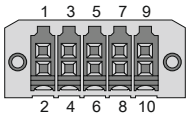

1) The interfaces, etc. available on the device or module have been numbered for the purpose of clear differentiation. This numbering may deviate from the numbering used by the respective operating system, however.
2) This interface (if available) is automatically enabled in BIOS as COMA with default addresses I/O:3F8h and IRQ:4.
3) In Automation Studio / Automation Runtime, this interface is referred to as IF5.

Cable data

For more detailed information about the transfer rate, bus length or cable requirements for the respective interfaces/buses, see "Cable data" on page 288.

4.2.5.4.3.3 LED status indicators L2, L3

The LEDs of the interface option are located near the ETH1 interface.

LED status indicators			
LED	**Color**	**Status**	**Explanation**
L1	Not connected		
L2	Green	On	POWERLINK link LED A connection to a POWERLINK network exists.
		Blinking	POWERLINK link LED Data is being transferred.
L3	Green-Red	On	POWERLINK status/error LED See "LED "S/E" (LED "Status/Error")" on page 290.
		Off	POWERLINK status/error LED See "LED "S/E" (LED "Status/Error")" on page 290.

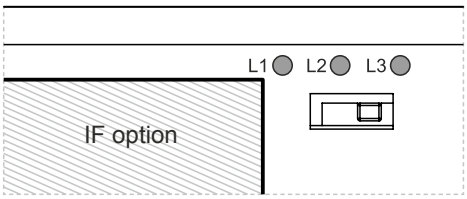

POWERLINK commissioning and operation

For a description of the operating modes, status and node numbers of the POWERLINK interface(s), see "LED "S/E" (LED "Status/Error")" on page 290.

4.2.5.4.4 Shielding

For the interfaces on the 10-pin female connector, the shield of the interfaces can be connected to pin *Shield* (pin 2) of the female connector.

In addition, there is a functional ground connection on the interface cover of the system unit and a screw point for cable shields that can also be used for the shielded cables.

4.2.5.4.5 Driver support and firmware update

Drivers for approved operating systems are available for download in the Downloads section of the B&R website (www.br-automation.com) (if required and not already included in the operating system).

Approved operating systems:

- Automation Runtime
- B&R Linux
- Windows 10
- Windows Embedded 8.1 Industry
- Windows 7
- Windows Embedded Standard 7

Automation Runtime / B&R Hypervisor (RTOS)

The driver is part of the Automation Runtime and the firmware is part of Automation Studio. The module is automatically brought up to this level.

To update the firmware contained in Automation Studio, a hardware upgrade must be performed (see **Project management / Workspace / Upgrades** in Automation Help).

All interfaces of the interface option are supported in Automation Runtime / B&R Hypervisor.

General purpose operating system (GPOS)

If this interface option is used with a GPOS, only operation of the serial port(s) is supported and the firmware update function cannot be used.

4.2.5.5 5ACCIF01.FPLS-001

4.2.5.5.1 General information

Interface option 5ACCIF01.FPLS-001 is equipped with a POWERLINK and RS232 interface. In addition, 512 kB nvSRAM is installed.

- 1x POWERLINK interface managing or controlled node
- 1x RS232 interface
- 512 kB nvSRAM
- Compatible with APC2100/PPC2100 and APC2200/PPC2200

4.2.5.5.2 Order data

Order number	Short description	Figure
	Interface options	
5ACCIF01.FPLS-001	Interface card - 1x RS232 interface - 1x POWERLINK interface - 512 kB nvSRAM - For APC2100/PPC2100/APC2200/PPC2200 - Only available with a new device	
	Optional accessories	
	Terminal blocks	
0TB1210.3100	Connector 300 VDC - 10-pin female - Cage clamp terminal block - Protected against vibration by the screw flange	

4.2.5.5.3 Technical data

Information:

The following specified characteristic data, features and limit values are only valid for this accessory and may differ from those of the complete system. The data specified for the complete system applies to the complete system in which this accessory is installed, for example.

Order number	5ACCIF01.FPLS-001
General information	
LEDs	L2, L3
B&R ID code	0xE9B9
Certifications	
CE	Yes
UL	cULus E115267 Industrial control equipment
HazLoc	cULus HazLoc E180196 Industrial control equipment for hazardous locations Class I, Division 2, Groups ABCD, T4 [1)]
DNV	Temperature: **B** (0 - 55°C) Humidity: **B** (up to 100%) Vibration: **A** (0.7 g) EMC: **B** (bridge and open deck) [2)]
EAC	Product family certification
Controller	
nvSRAM	
Size	512 kB
Data retention	20 years
Read/Write endurance	Min. 1,000,000
Remanent variables in power failure mode	256 kB (for e.g. Automation Runtime, see Automation Help)
Interfaces	
COM	
Quantity	1
Type	RS232, modem supported, not galvanically isolated
Variant	10-pin, male
UART	16550-compatible, 16-byte FIFO buffer
Max. baud rate	115 kbit/s
POWERLINK	
Quantity	1
Type	Type 4 [3)]
Variant	RJ45, shielded
Transfer rate	100 Mbit/s
Transfer	100BASE-TX
Line length	Max. 100 m between two stations (segment length)
Electrical properties	
Power consumption	1.5 W
Operating conditions	
Pollution degree per EN 61131-2	Pollution degree 2

Order number	5ACCIF01.FPLS-001
Ambient conditions	
Temperature	
Operation	-20 to 55°C
Storage	-20 to 60°C
Transport	-20 to 60°C
Relative humidity	
Operation	5 to 90%, non-condensing
Storage	5 to 95%, non-condensing
Transport	5 to 95%, non-condensing
Mechanical properties	
Weight	25 g

1) Yes, but applies only if all components installed in the complete system have this certification and the complete system bears the corresponding mark.
2) Yes, but applies only if all components installed in the complete system have this certification and are listed on the associated DNV certificate for the product family.
3) For additional information, see Automation Help (**Communication / POWERLINK / General information / Hardware - IF / LS**).

4.2.5.5.3.1 POWERLINK interface - Pinout

The POWERLINK interface on the system unit is referred to as "IF1".

POWERLINK - IF1[1)2)]		
Variant	RJ45, female	
Wiring	S/STP (Cat 5e)	
Cable length	Max. 100 m (min. Cat 5e)	
LED status indicator (b)	**On**	**Off**
Green	See status/error LED.	
LED "Link" (a)	**On**	**Off**
Yellow	Link (a connection to a POWERLINK network exists)	Blinking (data being transferred)

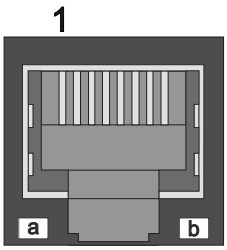

1) The interfaces, etc. available on the device or module have been numbered for the purpose of clear differentiation. This numbering may deviate from the numbering used by the respective operating system, however.
2) In Automation Studio / Automation Runtime, this interface is referred to as IF1.

4.2.5.5.3.2 Serial interface COMA - Pinout

Serial interface COMA on the system unit is referred to as "IFx".

Serial interface COMA - IFx[1)2)3)]	
	RS232
Variant	10-pin, male
Type	RS232, modem supported
Galvanic isolation	No
UART	16550-compatible, 16-byte FIFO buffer
Transfer rate	Max. 115 kbit/s
Bus length	Max. 15 m
Pin	**Pinout**
1	DCD
2	DSR
3	RXD
4	RTS
5	TXD
6	CTS
7	DTR
8	RI
9	GND
10	Shield

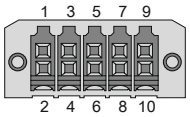

1) The interfaces, etc. available on the device or module have been numbered for the purpose of clear differentiation. This numbering may deviate from the numbering used by the respective operating system, however.
2) This interface (if available) is automatically enabled in BIOS as COMA with default addresses I/O:3F8h and IRQ:4.
3) In Automation Studio / Automation Runtime, this interface is referred to as IF5.

Cable data

For more detailed information about the transfer rate, bus length or cable requirements for the respective interfaces/buses, see "Cable data" on page 288.

4.2.5.5.3.3 LED status indicators L2, L3

The LEDs of the interface option are located near the ETH1 interface.

LED status indicators			
LED	**Color**	**Status**	**Explanation**
L1	Not connected		
L2	Green	On	POWERLINK link LED A connection to a POWERLINK network exists.
		Blinking	POWERLINK link LED Data is being transferred.
L3	Green-Red	On	POWERLINK status/error LED See "LED "S/E" (LED "Status/Error")" on page 290.
		Off	POWERLINK status/error LED See "LED "S/E" (LED "Status/Error")" on page 290.

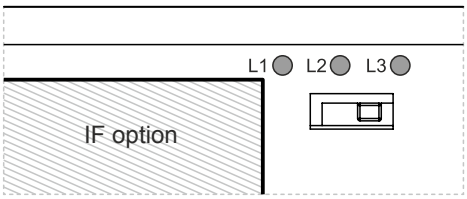

POWERLINK commissioning and operation

For a description of the operating modes, status and node numbers of the POWERLINK interface(s), see "LED "S/E" (LED "Status/Error")" on page 290.

4.2.5.5.4 Shielding

For the interfaces on the 10-pin female connector, the shield of the interfaces can be connected to pin *Shield* (pin 2) of the female connector.

In addition, there is a functional ground connection on the interface cover of the system unit and a screw point for cable shields that can also be used for the shielded cables.

4.2.5.5.5 Driver support and firmware update

Drivers for approved operating systems are available for download in the Downloads section of the B&R website (www.br-automation.com) (if required and not already included in the operating system).

Approved operating systems:

- Automation Runtime
- B&R Linux
- Windows 10
- Windows Embedded 8.1 Industry
- Windows 7
- Windows Embedded Standard 7

Automation Runtime / B&R Hypervisor (RTOS)

The driver is part of the Automation Runtime and the firmware is part of Automation Studio. The module is automatically brought up to this level.

To update the firmware contained in Automation Studio, a hardware upgrade must be performed (see **Project management / Workspace / Upgrades** in Automation Help).

All interfaces of the interface option are supported in Automation Runtime / B&R Hypervisor.

General purpose operating system (GPOS)

If this interface option is used with a GPOS, only operation of the serial port(s) is supported and the firmware update function cannot be used.

4.2.5.6 5ACCIF01.FPSC-000

4.2.5.6.1 General information

Interface option 5ACCIF01.FPSC-000 is equipped with a POWERLINK, RS232 and CAN bus master interface. In addition, 32 kB FRAM is installed.

- 1x POWERLINK interface managing or controlled node
- 1x CAN bus master interface
- 1x RS232 interface
- 32 kB FRAM
- Compatible with APC2100/PPC2100 and APC2200/PPC2200

This interface option can only be operated with Automation Runtime.

4.2.5.6.2 Order data

Order number	Short description	Figure
	Interface options	
5ACCIF01.FPSC-000	Interface card - 1x RS232 interface - 1x CAN interface - 1x POWERLINK interface - 32 kB FRAM - For APC2100/PPC2100/APC2200/PPC2200 - Only available with a new device	
	Optional accessories	
	Terminal blocks	
0TB1210.3100	Connector 300 VDC - 10-pin female - Cage clamp terminal block - Protected against vibration by the screw flange	

4.2.5.6.3 Technical data

Information:

The following specified characteristic data, features and limit values are only valid for this accessory and may differ from those of the complete system. The data specified for the complete system applies to the complete system in which this accessory is installed, for example.

Order number	5ACCIF01.FPSC-000
General information	
LEDs	L1, L2, L3
B&R ID code	0xE53F
Certifications	
CE	Yes
UL	cULus E115267 Industrial control equipment
HazLoc	cULus HazLoc E180196 Industrial control equipment for hazardous locations Class I, Division 2, Groups ABCD, T4 [1)]
DNV	Temperature: **B** (0 - 55°C) Humidity: **B** (up to 100%) Vibration: **A** (0.7 g) EMC: **B** (bridge and open deck) [2)]
EAC	Product family certification
Controller	
FRAM	
Size	32 kB
Data retention	10 years
Read/Write endurance	Min. 10^{12} times/byte
Remanent variables in power failure mode	32 kB (for e.g. Automation Runtime, see Automation Help)
Interfaces	
COM	
Quantity	1
Type	RS232, modem not supported, not galvanically isolated
Variant	10-pin, male
UART	16550-compatible, 16-byte FIFO buffer
Max. baud rate	115 kbit/s
POWERLINK	
Quantity	1
Type	Type 4 [3)]
Variant	RJ45, shielded
Transfer rate	100 Mbit/s
Transfer	100BASE-TX
Line length	Max. 100 m between two stations (segment length)

Order number	5ACCIF01.FPSC-000
CAN	
Quantity	1
Variant	10-pin, male, not galvanically isolated
Transfer rate	Max. 1 Mbit/s
Terminating resistor	
Type	Can be switched on and off with slide switch
Default setting	Off
Electrical properties	
Power consumption	1.75 W
Operating conditions	
Pollution degree per EN 61131-2	Pollution degree 2
Ambient conditions	
Temperature	
Operation	-20 to 55°C
Storage	-20 to 60°C
Transport	-20 to 60°C
Relative humidity	
Operation	5 to 90%, non-condensing
Storage	5 to 95%, non-condensing
Transport	5 to 95%, non-condensing
Mechanical properties	
Weight	25 g

1) Yes, but applies only if all components installed in the complete system have this certification and the complete system bears the corresponding mark.
2) Yes, but applies only if all components installed in the complete system have this certification and are listed on the associated DNV certificate for the product family.
3) For additional information, see Automation Help (**Communication / POWERLINK / General information / Hardware - IF / LS**).

4.2.5.6.3.1 POWERLINK interface - Pinout

The POWERLINK interface on the system unit is referred to as "IF1".

POWERLINK - IF1[1)2)]		
Variant	RJ45, female	
Wiring	S/STP (Cat 5e)	
Cable length	Max. 100 m (min. Cat 5e)	
LED status indicator (b)	**On**	**Off**
Green	See status/error LED.	
LED "Link" (a)	**On**	**Active**
Yellow	Link (a connection to a POWERLINK network exists)	Blinking (data being transferred)

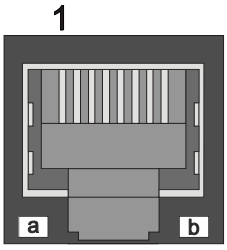

1) The interfaces, etc. available on the device or module have been numbered for the purpose of clear differentiation. This numbering may deviate from the numbering used by the respective operating system, however.
2) In Automation Studio / Automation Runtime, this interface is referred to as IF1.

4.2.5.6.3.2 Serial interface COM - Pinout

Serial interface COM on the system unit is referred to as "IFx".

Serial interface COM - IFx[1)2)]	
	RS232
Variant	10-pin, male
Type	RS232, not modem supported
Galvanic isolation	No
UART	16550-compatible, 16-byte FIFO buffer
Transfer rate	Max. 115 kbit/s
Bus length	Max. 15 m
Pin	**Pinout**
1	-
2	Shield
3	-
4	-
5	-
6	-
7	-
8	COM GND
9	RXD
10	TXD

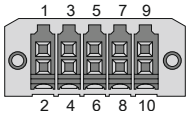

1) The interfaces, etc. available on the device or module have been numbered for the purpose of clear differentiation. This numbering may deviate from the numbering used by the respective operating system, however.
2) This interface can only be used in Automation Runtime and is displayed as IF5 in Automation Studio / Automation Runtime. It is not a "PC interface" and therefore not displayed in BIOS.

Cable data

For more detailed information about the transfer rate, bus length or cable requirements for the respective interfaces/buses, see "Cable data" on page 288.

4.2.5.6.3.3 CAN bus interface - Pinout

The CAN bus interface on the system unit is referred to as "IFx".

CAN bus - IFx[1)2)]		
Variant	10-pin, male	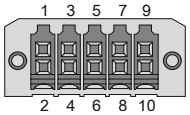
Galvanic isolation	No	
Transfer rate	Max. 1 Mbit/s	
Bus length	Max. 1000 m	
Pin	**Pinout**	
1	-	
2	Shield	
3	-	
4	-	
5	CAN H	
6	CAN L	
7	CAN GND	
8	-	
9	-	
10	-	

1) The interfaces, etc. available on the device or module have been numbered for the purpose of clear differentiation. This numbering may deviate from the numbering used by the respective operating system, however.
2) This interface can only be used in Automation Runtime and is displayed as IF3 in Automation Studio / Automation Runtime. It is not a "PC interface" and therefore not displayed in BIOS.

CAN driver settings

The baud rate can be set either with predefined values or via the bit timing register.
For additional information about CAN interfaces with AS/AR support, see Automation Help. For additional information about CAN interfaces without AS/AR support, see the user's manual for the B&R CAN driver at www.br-automation.com.

Bit timing register 0	Bit timing register 1	Baud rate
00h	14h	1000 kbit/s
80h or 00h	1Ch	500 kbit/s
81h or 01h	1Ch	250 kbit/s
83h or 03h	1Ch	125 kbit/s
84h or 04h	1Ch	100 kbit/s
89h or 09h	1Ch	50 kbit/s

Cable data

For more detailed information about the transfer rate, bus length or cable requirements for the respective interfaces/buses, see "Cable data" on page 288.

Terminating resistor

A terminating resistor is integrated on the interface option. It is switched on or off for the CAN bus interface with a switch. LED status indicator L1 indicates the current state:

- ON: Activated
- OFF (default): Switched off

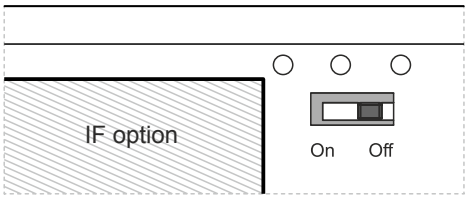

4.2.5.6.3.4 LED status indicators L1, L2, L3

The LEDs of the interface option are located near the ETH1 interface.

LED status indicators			
LED	**Color**	**Status**	**Explanation**
L1	Yellow	On	The CAN bus terminating resistor is switched on.
		Off	The CAN bus terminating resistor is switched off.
L2	Green	On	POWERLINK link LED A connection to a POWERLINK network exists.
		Blinking	POWERLINK link LED Data is being transferred.
L3	Green-Red	On	POWERLINK status/error LED See "LED "S/E" (LED "Status/Error")" on page 290.
		Off	POWERLINK status/error LED See "LED "S/E" (LED "Status/Error")" on page 290.

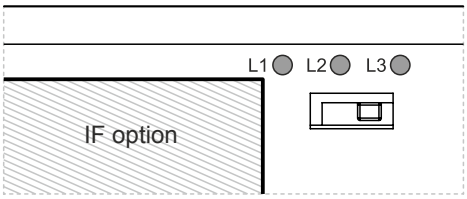

POWERLINK commissioning and operation

For a description of the operating modes, status and node numbers of the POWERLINK interface(s), see "LED "S/E" (LED "Status/Error")" on page 290.

4.2.5.6.4 Shielding

For the interfaces on the 10-pin female connector, the shield of the interfaces can be connected to pin *Shield* (pin 2) of the female connector.

In addition, there is a functional ground connection on the interface cover of the system unit and a screw point for cable shields that can also be used for the shielded cables.

4.2.5.6.5 Driver support and firmware update

The driver is part of the Automation Runtime and the firmware is part of Automation Studio. The module is automatically brought up to this level.

To update the firmware contained in Automation Studio, a hardware upgrade must be performed (see **Project management / Workspace / Upgrades** in Automation Help).

4.2.5.7 5ACCIF01.FPSC-001

4.2.5.7.1 General information

Interface option 5ACCIF01.FPSC-001 is equipped with a POWERLINK, RS232, CAN bus master and X2X Link master interface. In addition, 512 kB nvSRAM is installed.

- 1x POWERLINK interface managing or controlled node
- 1x CAN bus master interface
- 1x X2X Link master interface
- 1x RS232 interface
- 512 kB nvSRAM
- Compatible with APC2100/PC2100 and APC2200/PPC2200

This interface option can only be operated with Automation Runtime.

4.2.5.7.2 Order data

Order number	Short description	Figure
	Interface options	
5ACCIF01.FPSC-001	Interface card - 1x RS232 interface - 1x CAN interface - 1x X2X Link Interface - 1x POWERLINK interface - 512 kB nvSRAM - For APC2100/PPC2100/APC2200/PPC2200 - Only available with a new device	
	Optional accessories	
	Terminal blocks	
0TB1210.3100	Connector 300 VDC - 10-pin female - Cage clamp terminal block - Protected against vibration by the screw flange	

4.2.5.7.3 Technical data

Information:

The following specified characteristic data, features and limit values are only valid for this accessory and may differ from those of the complete system. The data specified for the complete system applies to the complete system in which this accessory is installed, for example.

Order number	5ACCIF01.FPSC-001
General information	
LEDs	L1, L2, L3
B&R ID code	0xE9BC
Certifications	
CE	Yes
UL	cULus E115267 Industrial control equipment
HazLoc	cULus HazLoc E180196 Industrial control equipment for hazardous locations Class I, Division 2, Groups ABCD, T4 [1)]
DNV	Temperature: **B** (0 - 55°C) Humidity: **B** (up to 100%) Vibration: **A** (0.7 g) EMC: **B** (bridge and open deck) [2)]
EAC	Product family certification
Controller	
nvSRAM	
Size	512 kB
Data retention	20 years
Read/Write endurance	Min. 1,000,000
Remanent variables in power failure mode	256 kB (for e.g. Automation Runtime, see Automation Help)
Interfaces	
COM	
Quantity	1
Type	RS232, modem not supported, not galvanically isolated
Variant	10-pin, male
UART	16550-compatible, 16-byte FIFO buffer
Max. baud rate	115 kbit/s

Order number	5ACCIF01.FPSC-001
POWERLINK	
Quantity	1
Type	Type 4 [3]
Variant	RJ45, shielded
Transfer rate	100 Mbit/s
Transfer	100BASE-TX
Line length	Max. 100 m between two stations (segment length)
CAN	
Quantity	1
Variant	10-pin, male, galvanically isolated
Transfer rate	Max. 1 Mbit/s
Terminating resistor	
Type	Can be switched on and off with slide switch
Default setting	Off
X2X	
Type	X2X Link master
Quantity	1
Variant	10-pin, male, galvanically isolated
Electrical properties	
Power consumption	2 W
Operating conditions	
Pollution degree per EN 61131-2	Pollution degree 2
Ambient conditions	
Temperature	
Operation	-20 to 55°C
Storage	-20 to 60°C
Transport	-20 to 60°C
Relative humidity	
Operation	5 to 90%, non-condensing
Storage	5 to 95%, non-condensing
Transport	5 to 95%, non-condensing
Mechanical properties	
Weight	25 g

1) Yes, but applies only if all components installed in the complete system have this certification and the complete system bears the corresponding mark.
2) Yes, but applies only if all components installed in the complete system have this certification and are listed on the associated DNV certificate for the product family.
3) For additional information, see Automation Help (**Communication / POWERLINK / General information / Hardware - IF / LS**).

4.2.5.7.3.1 POWERLINK interface - Pinout

The POWERLINK interface on the system unit is referred to as "IF1".

POWERLINK - IF1[1)2)]		
Variant	RJ45, female	
Wiring	S/STP (Cat 5e)	
Cable length	Max. 100 m (min. Cat 5e)	
LED status indicator (b)	**On**	**Off**
Green	See status/error LED.	
LED "Link" (a)	**On**	**Active**
Yellow	Link (a connection to a POWERLINK network exists)	Blinking (data being transferred)

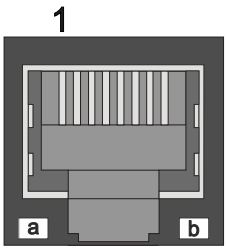

1) The interfaces, etc. available on the device or module have been numbered for the purpose of clear differentiation. This numbering may deviate from the numbering used by the respective operating system, however.
2) In Automation Studio / Automation Runtime, this interface is referred to as IF1.

4.2.5.7.3.2 Serial interface COM - Pinout

Serial interface COM on the system unit is referred to as "IFx".

Serial interface COM - IFx[1)2)]		
	RS232	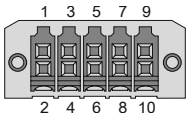
Variant	10-pin, male	
Type	RS232, not modem supported	
Galvanic isolation	No	
UART	16550-compatible, 16-byte FIFO buffer	
Transfer rate	Max. 115 kbit/s	
Bus length	Max. 15 m	
Pin	**Pinout**	
1	-	
2	Shield	
3	-	
4	-	
5	-	
6	-	
7	-	
8	COM GND	
9	RXD	
10	TXD	

1) The interfaces, etc. available on the device or module have been numbered for the purpose of clear differentiation. This numbering may deviate from the numbering used by the respective operating system, however.
2) This interface can only be used in Automation Runtime and is displayed as IF5 in Automation Studio / Automation Runtime. It is not a "PC interface" and therefore not displayed in BIOS.

Cable data

For more detailed information about the transfer rate, bus length or cable requirements for the respective interfaces/buses, see "Cable data" on page 288.

4.2.5.7.3.3 CAN bus interface - Pinout

The CAN bus interface on the system unit is referred to as "IFx".

CAN bus - IFx[1)2)]		
Variant	10-pin, male	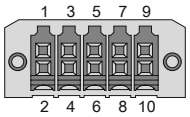
Galvanic isolation	Yes	
Transfer rate	Max. 1 Mbit/s	
Bus length	Max. 1000 m	
Pin	**Pinout**	
1	-	
2	Shield	
3	-	
4	-	
5	CAN H	
6	CAN L	
7	CAN GND	
8	-	
9	-	
10	-	

1) The interfaces, etc. available on the device or module have been numbered for the purpose of clear differentiation. This numbering may deviate from the numbering used by the respective operating system, however.
2) This interface can only be used in Automation Runtime and is displayed as IF3 in Automation Studio / Automation Runtime. It is not a "PC interface" and therefore not displayed in BIOS.

CAN driver settings

The baud rate can be set either with predefined values or via the bit timing register.
For additional information about CAN interfaces with AS/AR support, see Automation Help. For additional information about CAN interfaces without AS/AR support, see the user's manual for the B&R CAN driver at www.br-automation.com.

Bit timing register 0	Bit timing register 1	Baud rate
00h	14h	1000 kbit/s
80h or 00h	1Ch	500 kbit/s
81h or 01h	1Ch	250 kbit/s
83h or 03h	1Ch	125 kbit/s
84h or 04h	1Ch	100 kbit/s
89h or 09h	1Ch	50 kbit/s

Cable data

For more detailed information about the transfer rate, bus length or cable requirements for the respective interfaces/buses, see "Cable data" on page 288.

Terminating resistor

A terminating resistor is integrated on the interface option. It is switched on or off for the CAN bus interface with a switch. LED status indicator L1 indicates the current state:

- ON: Activated
- OFF (default): Switched off

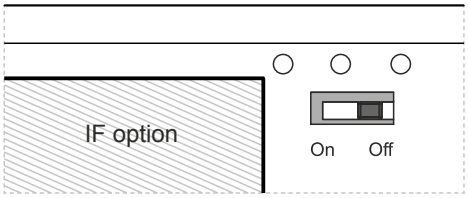

4.2.5.7.3.4 X2X Link master interface - Pinout

The X2X Link master interface on the system unit is referred to as "IFx".

X2X Link master - IFx[1)2)]	
Variant	10-pin, male
Galvanic isolation	Yes
Pin	**Pinout**
1	X2X
2	Shield
3	X2X\
4	X2X⊥
5	-
6	-
7	-
8	-
9	-
10	-

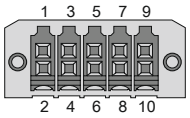

1) The interfaces, etc. available on the device or module have been numbered for the purpose of clear differentiation. This numbering may deviate from the numbering used by the respective operating system, however.
2) This interface can only be used in Automation Runtime and is displayed as IF2 in Automation Studio / Automation Runtime. It is not a "PC interface" and therefore not displayed in BIOS.

4.2.5.7.3.5 LED status indicators L1, L2, L3

The LEDs of the interface option are located near the ETH1 interface.

LED status indicators			
LED	**Color**	**Status**	**Explanation**
L1	Yellow	On	The CAN bus terminating resistor is switched on.
		Off	The CAN bus terminating resistor is switched off.
L2	Green	On	POWERLINK link LED A connection to a POWERLINK network exists.
		Blinking	POWERLINK link LED Data is being transferred.
L3	Green-Red	On	POWERLINK status/error LED See "LED "S/E" (LED "Status/Error")" on page 290.
		Off	POWERLINK status/error LED See "LED "S/E" (LED "Status/Error")" on page 290.

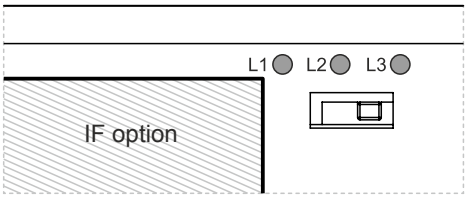

POWERLINK commissioning and operation

For a description of the operating modes, status and node numbers of the POWERLINK interface(s), see "LED "S/E" (LED "Status/Error")" on page 290.

4.2.5.7.4 Shielding

For the interfaces on the 10-pin female connector, the shield of the interfaces can be connected to pin *Shield* (pin 2) of the female connector.

In addition, there is a functional ground connection on the interface cover of the system unit and a screw point for cable shields that can also be used for the shielded cables.

4.2.5.7.5 Driver support and firmware update

The driver is part of the Automation Runtime and the firmware is part of Automation Studio. The module is automatically brought up to this level.

To update the firmware contained in Automation Studio, a hardware upgrade must be performed (see **Project management / Workspace / Upgrades** in Automation Help).

4.2.5.8 5ACCIF01.FSS0-000

4.2.5.8.1 General information

Interface option 5ACCIF01.FSS0-000 is equipped with 2 RS422/RS485 interfaces.

- 2x RS422/RS485 interfaces
- Compatible with APC2100/PPC2100 and APC2200/PPC2200

4.2.5.8.2 Order data

Order number	Short description	Figure
	Interface options	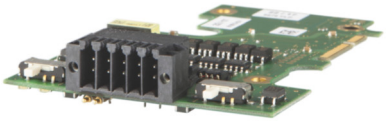
5ACCIF01.FSS0-000	Interface card - 2x RS422/RS485 interface - For APC2100/PPC2100/APC2200/PPC2200 - Only available with a new device	
	Optional accessories	
	Terminal blocks	
0TB1210.3100	Connector 300 VDC - 10-pin female - Cage clamp terminal block - Protected against vibration by the screw flange	

4.2.5.8.3 Technical data

Information:

The following specified characteristic data, features and limit values are only valid for this accessory and may differ from those of the complete system. The data specified for the complete system applies to the complete system in which this accessory is installed, for example.

Order number	5ACCIF01.FSS0-000
General information	
LEDs	L2, L3
B&R ID code	0xED7B
Certifications	
CE	Yes
UL	cULus E115267 Industrial control equipment
HazLoc	cULus HazLoc E180196 Industrial control equipment for hazardous locations Class I, Division 2, Groups ABCD, T4 [1]
DNV	Temperature: **B** (0 - 55°C) Humidity: **B** (up to 100%) Vibration: **A** (0.7 g) EMC: **B** (bridge and open deck) [2]
EAC	Product family certification
Interfaces	
COM	
Quantity	2
Type	RS422/RS485, galvanically isolated
Variant	10-pin, male
UART	16550-compatible, 16-byte FIFO buffer
Max. baud rate	115 kbit/s
Terminating resistor	
Type	Can be switched on and off with slide switch
Default setting	Off
Electrical properties	
Power consumption	1 W
Operating conditions	
Pollution degree per EN 61131-2	Pollution degree 2
Ambient conditions	
Temperature	
Operation	-20 to 60°C [3]
Storage	-20 to 60°C
Transport	-20 to 60°C
Relative humidity	
Operation	5 to 90%, non-condensing
Storage	5 to 95%, non-condensing
Transport	5 to 95%, non-condensing
Mechanical properties	
Weight	25 g

1) Yes, but applies only if all components installed in the complete system have this certification and the complete system bears the corresponding mark.
2) Yes, but applies only if all components installed in the complete system have this certification and are listed on the associated DNV certificate for the product family.
3) For detailed information, see the temperature tables in the user's manual.

4.2.5.8.3.1 Serial interface COM A - Pinout

Serial interface COM A on the system unit is referred to as "IFx".

Serial interface COM A - IFx[1)2)3)]		
	RS422/RS485	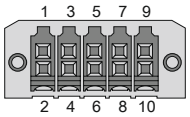
Variant	10-pin, male	
Type	RS422/RS485	
Galvanic isolation	Yes	
UART	16550-compatible, 16-byte FIFO buffer	
Transfer rate	Max. 115 kbit/s	
Bus length	Max. 1200 m	
Pin	**Pinout**	
1	-	
2	-	
3	-	
4	-	
5	-	
6	COM GND	
7	TXD	
8	TXD\	
9	RXD	
10	RXD\	

1) The interfaces, etc. available on the device or module have been numbered for the purpose of clear differentiation. This numbering may deviate from the numbering used by the respective operating system, however.
2) This interface (if available) is automatically enabled in BIOS as COM A with default addresses I/O:3F8h and IRQ:4.
3) This interface is displayed as IF7 in Automation Studio / Automation Runtime.

Cable data

For more detailed information about the transfer rate, bus length or cable requirements for the respective interfaces/buses, see "Cable data" on page 288.

Operation as RS485 interface

The pins of the RS422 default interface (1, 4, 6 and 9) must be used for operation. To do this, connect the pins as shown.

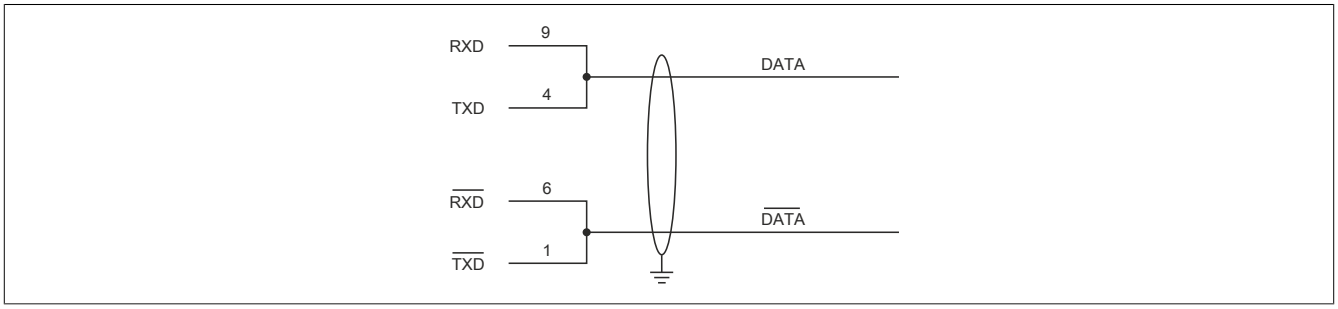

The RTS line must be switched by the driver for each transmission or reception; switching back does not take place automatically. This cannot be configured in Windows.

With long cable lengths, the voltage drop can result in greater potential differences between the bus devices, which can hinder communication. This can be improved by running the ground wire with the others.

The cable ends of an RS485 bus should be terminated (at least for longer cable lengths or higher transfer rates). Passive termination can normally be used by connecting the signal lines via a 120 Ω resistor at each of the two bus ends; see "Terminating resistor" for the IF card.

4.2.5.8.3.2 Serial interface COM D - Pinout

Serial interface COM D on the system unit is referred to as "IFx".

Serial interface COMD - IFx[1)2)3)]	
	RS422/RS485
Variant	10-pin, male
Type	RS422/RS485
Galvanic isolation	Yes
UART	16550-compatible, 16-byte FIFO buffer
Transfer rate	Max. 115 kbit/s
Bus length	Max. 1200 m
Pin	**Pinout**
1	RXD
2	RXD\
3	TXD
4	TXD\
5	COM GND
6	-
7	-
8	-
9	-
10	-

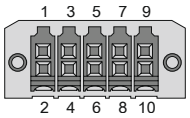

1) The interfaces, etc. available on the device or module have been numbered for the purpose of clear differentiation. This numbering may deviate from the numbering used by the respective operating system, however.
2) This interface (if available) is automatically enabled in BIOS as COM D with default addresses I/O:2E8h and IRQ:10.
3) This interface is displayed as IF8 in Automation Studio / Automation Runtime.

Operating COM D as an RS485 interface

The pins of the RS422 default interface (1, 2, 3 and 4) must be used for operation. To do this, connect the pins as shown.

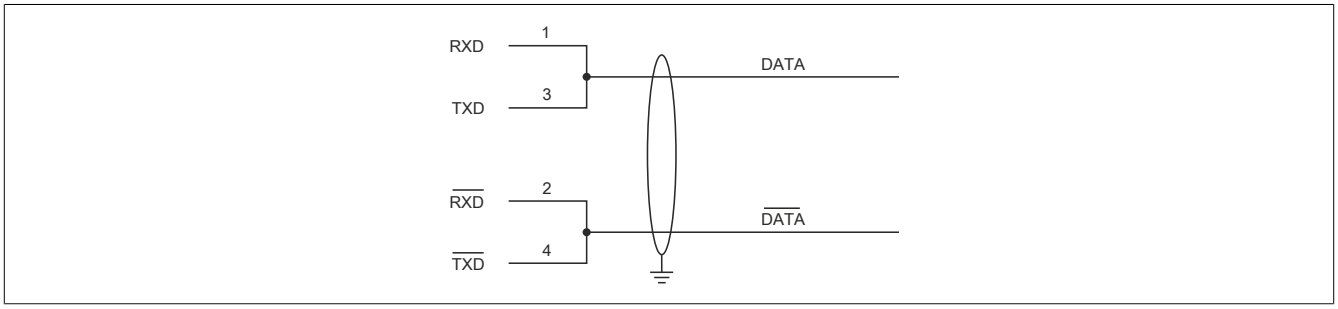

Figure 2: RS232/RS422/RS485 interface - COM D operation in RS485 mode

The RTS line must be switched by the driver for each transmission or reception; switching back does not take place automatically. This cannot be configured in Windows.

With long cable lengths, the voltage drop can result in greater potential differences between the bus devices, which can hinder communication. This can be improved by running the ground wire with the others.

The cable ends of an RS485 bus should be terminated (at least for longer cable lengths or higher transfer rates). Passive termination can normally be used by connecting the signal lines via a 120 Ω resistor at each of the two bus ends; see "Terminating resistor" for the IF card.

4.2.5.8.3.3 LED status indicators L2, L3

The LEDs of the interface option are located near the ETH1 interface.

LED status indicators			
LED	**Color**	**Status**	**Explanation**
L1	Not connected		
L2	Yellow	On	The COM D terminating resistor is switched on.
		Off	The COM D terminating resistor is switched off.
L3	Yellow	On	The COM A terminating resistor is switched on.
		Off	The COM A terminating resistor is switched off.

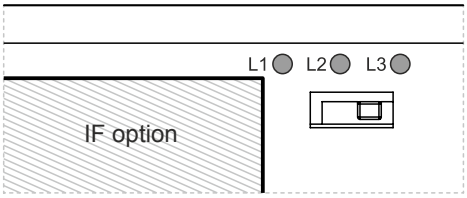

4.2.5.8.3.4 Terminating resistor

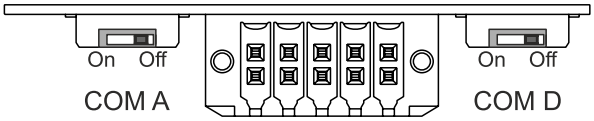

One terminating resistor per COM is integrated on the interface option; they are located to the left and right of the RS422/RS485 interface. Both can be switched on or off with a switch. LED status indicators L2 and L3 (see "LED status indicators L2, L3" on page 142) indicate the state of the assigned terminating resistor:

- ON: Switched on
- OFF (default): Switched off

4.2.5.8.3.5 Firmware

In order to ensure the functionality of the interface option, at least the following firmware version (MTCX) must be installed on the PC:

The firmware can be downloaded from the B&R website (www.br-automation.com).

4.2.5.8.3.6 Hardware

In order to ensure the functionality of the interface option, the PC must have at least the following hardware revision:

- 5PPC2100.BY01-002 - Rev. F0 or later
- 5PPC2100.BY11-002 - Rev. E0 or later
- 5PPC2100.BY22-002 - Rev. E0 or later
- 5PPC2100.BY34-002 - Rev. F0 or later
- 5PPC2100.BY44-002 - Rev. F0 or later
- 5PPC2100.BY48-002 - Rev. D0 or later

4.2.5.8.4 Shielding

The shields of the cables connected to the female 10-pin connector can be connected to the screw point for cable shields, see , as an alternative to the functional ground connection of the interface cover of the system unit.

4.2.5.8.5 Driver support

Drivers for approved operating systems are available for download in the Downloads section of the B&R website (www.br-automation.com) (if required and not already included in the operating system).

Approved operating systems:

- Automation Runtime
- B&R Linux
- Windows 10
- Windows Embedded 8.1 Industry
- Windows 7
- Windows Embedded Standard 7

4.2.5.9 5ACCIF01.ICAN-000

4.2.5.9.1 General information

Interface option 5ACCIF01.ICAN-000 is equipped with a CAN bus master interface.

- 1x CAN bus master interface
- Compatible with APC2100/PPC2100 and APC2200/PPC2200

4.2.5.9.2 Order data

Order number	Short description	Figure
	Interface options	
5ACCIF01.ICAN-000	Interface card - 1x CAN interface - For APC2100/PPC2100/ APC2200/PPC2200 - Only available with a new device	
	Optional accessories	
	Terminal blocks	
0TB1210.3100	Connector 300 VDC - 10-pin female - Cage clamp terminal block - Protected against vibration by the screw flange	

4.2.5.9.3 Technical data

Information:

The following specified characteristic data, features and limit values are only valid for this accessory and may differ from those of the complete system. The data specified for the complete system applies to the complete system in which this accessory is installed, for example.

Order number	5ACCIF01.ICAN-000
General information	
LEDs	L1
B&R ID code	0xE9BB
Certifications	
CE	Yes
UL	cULus E115267 Industrial control equipment
HazLoc	cULus HazLoc E180196 Industrial control equipment for hazardous locations Class I, Division 2, Groups ABCD, T4 [1]
EAC	Product family certification
Interfaces	
CAN	
Quantity	1
Controller	Bosch CC770 (compatible with Intel 82527 CAN controller)
Variant	10-pin, male, galvanically isolated
Transfer rate	Max. 1 Mbit/s
Terminating resistor	
Type	Can be switched on and off with slide switch
Default setting	Off
Electrical properties	
Power consumption	0.5 W
Operating conditions	
Pollution degree per EN 61131-2	Pollution degree 2
Ambient conditions	
Temperature	
Operation	-20 to 60°C [2]
Storage	-20 to 60°C
Transport	-20 to 60°C
Relative humidity	
Operation	5 to 90%, non-condensing
Storage	5 to 95%, non-condensing
Transport	5 to 95%, non-condensing
Mechanical properties	
Weight	25 g

1) Yes, but applies only if all components installed in the complete system have this certification and the complete system bears the corresponding mark.
2) For detailed information, see the temperature tables in the user's manual.

4.2.5.9.3.1 CAN bus interface - Pinout

The CAN bus interface on the system unit is referred to as "IFx".

CAN bus - IFx[1)2)]	
Variant	10-pin, male
Galvanic isolation	Yes
Transfer rate	Max. 1 Mbit/s
Bus length	Max. 1000 m
Pin	**Pinout**
1	-
2	CAN shield
3	-
4	-
5	CAN H
6	CAN L
7	CAN GND
8	-
9	-
10	-

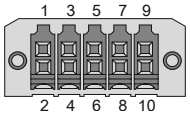

1) The interfaces, etc. available on the device or module have been numbered for the purpose of clear differentiation. This numbering may deviate from the numbering used by the respective operating system, however.
2) This interface (if available) is automatically enabled in BIOS as CAN with default addresses I/O:384h/385h and IRQ:10.

I/O address and IRQ

Resource	Default setting	Function
I/O address	384h (address register)	Defines the register number to be accessed.
	385h (data register)	Access to the register defined in the address register.
IRQ	IRQ:10	Interrupt

CAN driver settings

The baud rate can be set either with predefined values or via the bit timing register.
For additional information about CAN interfaces with AS/AR support, see Automation Help. For additional information about CAN interfaces without AS/AR support, see the user's manual for the B&R CAN driver at www.br-automation.com.

Bit timing register 0	Bit timing register 1	Baud rate
00h	14h	1000 kbit/s
80h or 00h	1Ch	500 kbit/s
81h or 01h	1Ch	250 kbit/s
83h or 03h	1Ch	125 kbit/s
84h or 04h	1Ch	100 kbit/s
89h or 09h	1Ch	50 kbit/s

Terminating resistor

A terminating resistor is integrated on the interface option. It is switched on or off for the CAN bus interface with a switch. LED status indicator L1 indicates the current state:

- ON: Activated
- OFF (default): Switched off

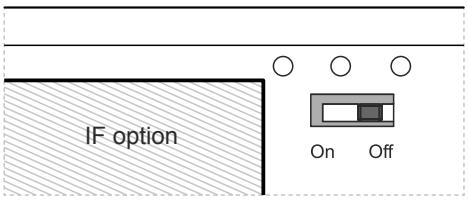

4.2.5.9.3.2 LED status indicator L1

The LEDs of the interface option are located near the ETH1 interface.

LED status indicator			
LED	**Color**	**Status**	**Explanation**
L1	Yellow	On	The CAN bus terminating resistor is switched on.
		Off	The CAN bus terminating resistor is switched off.
L2	Not connected		
L3	Not connected		
-			

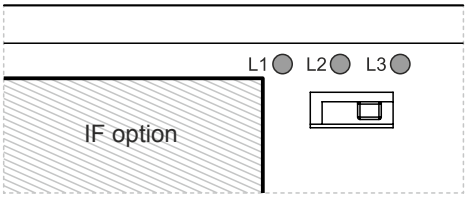

4.2.5.9.3.3 Firmware

In order to ensure the functionality of the interface option, at least the following firmware version (MTCX) must be installed on the PC:

The firmware can be downloaded from the B&R website (www.br-automation.com).

4.2.5.9.4 Shielding

For the interfaces on the 10-pin female connector, the shield of the interfaces can be connected to pin *Shield* (pin 2) of the female connector.

In addition, there is a functional ground connection on the interface cover of the system unit and a screw point for cable shields that can also be used for the shielded cables.

4.2.5.9.5 Driver support

Drivers for approved operating systems are available for download in the Downloads section of the B&R website (www.br-automation.com) (if required and not already included in the operating system).

Approved operating systems:

- Automation Runtime
- B&R Linux
- Windows 10
- Windows Embedded 8.1 Industry
- Windows 7
- Windows Embedded Standard 7

4.2.6 Flanges

4.2.6.1 5ACCFL00.0000-000

4.2.6.1.1 General information

The rotary flange is installed on the mounting unit and designed for swing arm systems with 48 mm shaft diameter. The range of rotation is -150° to +150°.

- Rotary flange
- Range of rotation ±150°
- Stepless adjustment of range of rotation
- For swing arm systems with 48 mm shaft diameter

4.2.6.1.2 Order data

Order number	Short description	Figure
	Flanges	
5ACCFL00.0000-000	AP5000 flange - Swing arm rotary flange - For swing arm mounting unit	

4.2.6.1.3 Technical data

Information:

The following specified characteristic data, features and limit values are only valid for these individual components and may differ from those of the complete system. The data specified for the complete system applies to the complete system in which this individual component is used, for example.

Order number	5ACCFL00.0000-000
General information	
Certifications	
CE	Yes
UL	cULus E115267 Industrial control equipment
EAC	Product family certification
Operating conditions	
Pollution degree per EN 61131-2	Pollution degree 2
Mechanical properties	
Material	Aluminum (similar to RAL 9006), coated
Dimensions	
Height	55 mm
Diameter	75 mm (outer diameter) 48.5 mm (inner diameter)
Weight	530 g

4.2.6.1.4 Dimensions

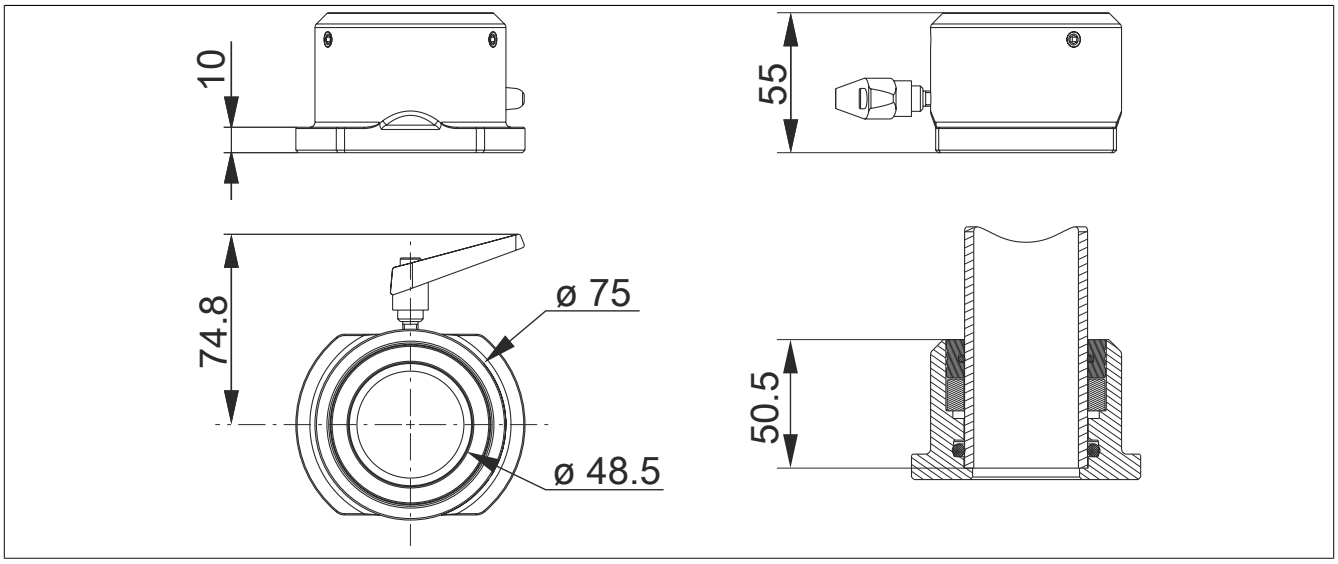

4.2.6.2 5ACCFL00.0100-000

4.2.6.2.1 General information

The swivel-tilt flange is installed on the mounting unit and designed for swing arm systems with 48 mm shaft diameter. The range of rotation is from -150° to +150°; the tilting range is up to a maximum of 15°.

- Swivel-tilt flange
- Range of rotation: ±150°
- Tilting range: ±15°
- Stepless adjustment of the range of rotation and tilting range
- For swing arm systems with 48 mm shaft diameter
- Tightening torque for tilt flange locking lever: Max. 7 Nm
- Tightening torque rotary flange locking lever: 5 Nm
- Tightening torque for locking screw (M6) opposite the clamping lever: Max. 3 Nm

Warning!

The swivel-tilt flange is generally compatible with all panel sizes.
Use in conjunction with panels in portrait format is not recommended since the range of rotation and tilt cannot be fully utilized.

Caution!

After adjusting the rotation and/or tilt angle, the corresponding locking lever must be fixed in position (see above for the maximum tightening torques).
The screw in the locking lever is not permitted to be tightened. Fixing must be carried out exclusively with the locking lever.

4.2.6.2.2 Order data

Order number	Short description	Figure
	Flanges	
5ACCFL00.0100-000	AP5000 flange - Swivel-tilt flange for swing arm - For swing arm mounting unit	

4.2.6.2.3 Technical data

Information:

The following specified characteristic data, features and limit values are only valid for these individual components and may differ from those of the complete system. The data specified for the complete system applies to the complete system in which this individual component is used, for example.

Order number	5ACCFL00.0100-000
General information	
Certifications	
CE	Yes
UL	cULus E115267 Industrial control equipment
EAC	Product family certification
Operating conditions	
Pollution degree per EN 61131-2	Pollution degree 2
Mechanical properties	
Material	Anodized aluminum E6/C0

Order number	5ACCFL00.0100-000
Dimensions	
Height	147 mm
Diameter	90 mm
Weight	1666 g

Danger!

+24 VDC power supply

The swivel-tilt flange is only permitted to be used in conjunction with devices supplied with a SELV/ PELV power supply unit or with safety extra-low voltage (SELV) per IEC 61010-2-201.

4.2.6.2.4 Dimensions

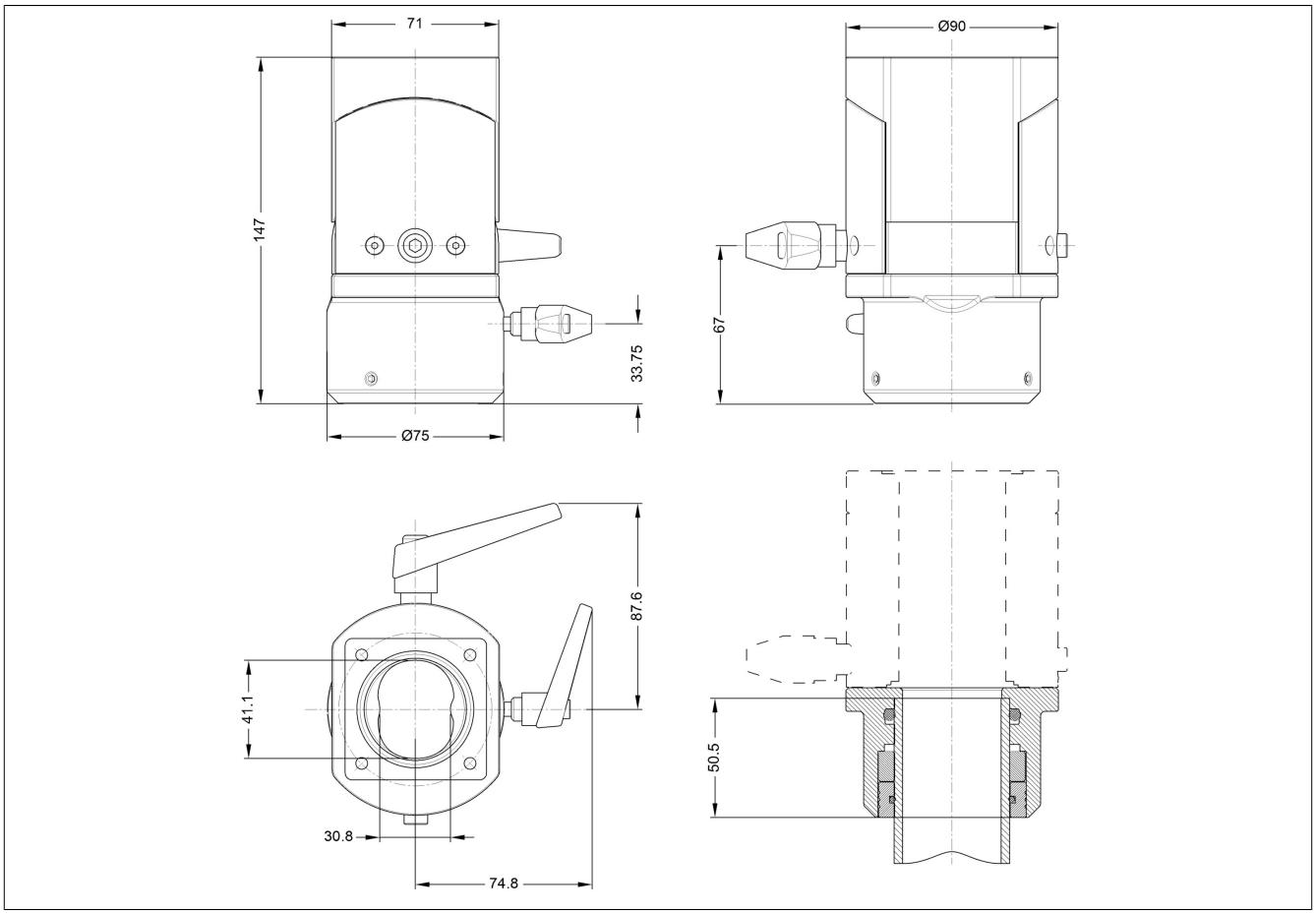

4.2.6.3 5ACCFL00.0200-000

4.2.6.3.1 General information

The adapter is installed on the mounting unit and designed for the installation of Rittal coupling CP40 (steel).

- Adapter for Rittal coupling CP40 (steel)

Rittal coupling "CP 40" (steel, 90 x 71 mm) must be used for installation.

4.2.6.3.2 Order data

Order number	Short description	Figure
	Flanges	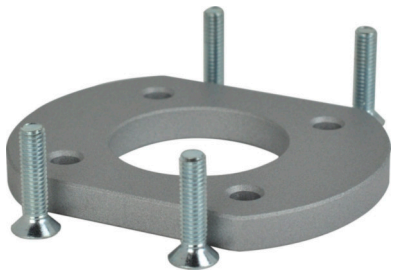
5ACCFL00.0200-000	AP5000 flange - Swing arm flange adapter - For Rittal - For swing arm mounting unit	

4.2.6.3.3 Technical data

Information:

The following specified characteristic data, features and limit values are only valid for these individual components and may differ from those of the complete system. The data specified for the complete system applies to the complete system in which this individual component is used, for example.

Order number	5ACCFL00.0200-000
General information	
Certifications	
CE	Yes
UL	cULus E115267 Industrial control equipment
EAC	Product family certification
Operating conditions	
Pollution degree per EN 61131-2	Pollution degree 2
Mechanical properties	
Material	Aluminum, coated
Dimensions	
Height	8.5 mm
Diameter	90 mm (outer diameter) 42 mm (inner diameter)
Weight	93 g

4.2.6.3.4 Dimensions

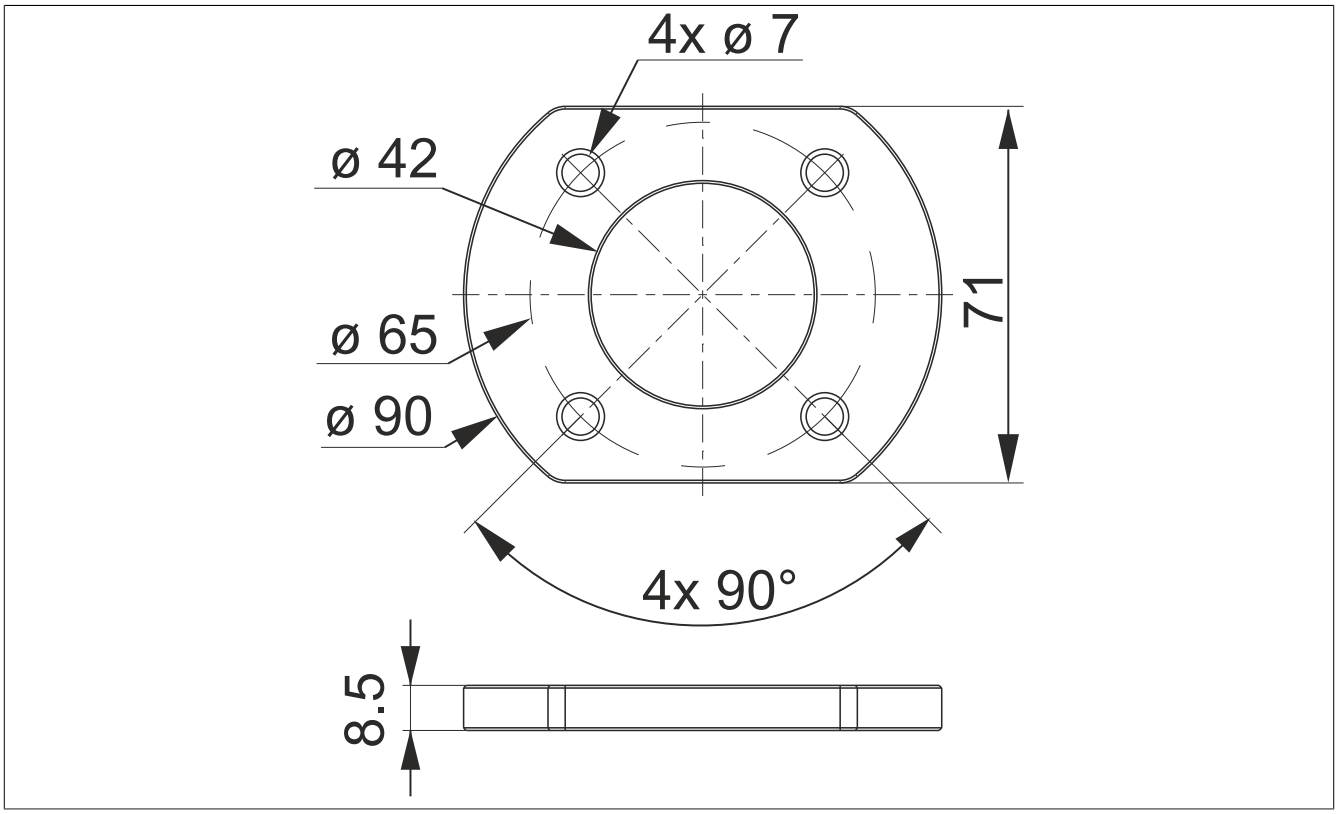

4.2.7 Expansion units

For more information regarding expansion units and operating elements, see section "Equipping panels with expansion units" on page 56.

4.2.7.1 5ACCKP00.xxxx-000

4.2.7.1.1 General information

5ACCKP00.xxxx-000 expansion units are expansion covers that can be installed on the Automation Panel 5230. Depending on the variant, 7 to 14 cutouts are available to be equipped with operating elements.

For specifications regarding the operating and switching elements used by B&R, see section "Features" under "5ACCSE00.000x-00x" on page 297.

> **Information:**
>
> **The maximum installation depth of operating and switching elements is 26 mm at the thinnest point and 30 mm at the thickest point.**

4.2.7.1.2 Order data

Order number	Short description	Figure
	Expansion units	
5ACCKP00.156B-000	AP5000 swing arm expansion option - Expansion cover - For switching elements - 10x cutouts for 22.3 mm switching elements - For panel 5AP5230.156B/156C-000	
5ACCKP00.185B-000	AP5000 swing arm expansion option - Expansion cover - For switching elements - 11x cutouts for 22.3 mm switching elements - For panel 5AP5230.185B/185C-000	
5ACCKP00.215C-000	AP5000 swing arm expansion option - Expansion cover - For switching elements - 13x cutouts for 22.3 mm switching elements - For panel 5AP5230.215C-000	
5ACCKP00.215I-000	AP5000 swing arm expansion option - Expansion cover - For switching elements - 7x cutouts for 22.3 mm switching elements - For panel 5AP5230.215I-000	
5ACCKP00.240C-000	AP5000 swing arm expansion option - Expansion cover - For switching elements - 14x cutouts for 22.3 mm switching elements - For panel 5AP5230.240C-000	
	Optional accessories	
	Operating elements	
5ACCSE00.0000-000	RAFIX 22 FS+ pushbutton - With 5 replaceable colored lenses - No color, red, green, blue, yellow - Normally open contact - Illuminated with white LED	
5ACCSE00.0000-001	RAFIX 22 FS+ pushbutton - With 5 replaceable colored lenses - No color, red, green, blue, yellow - Normally closed contact - Illuminated with white LED	
5ACCSE00.0000-002	RAFIX 22 FS+ pushbutton - With 5 replaceable colored lenses - No color, red, green, blue, yellow - Normally closed contact - Normally open contact - Illuminated with white LED	
5ACCSE00.0001-000	RAFIX 22 FS emergency stop button	
5ACCSE00.0002-000	RAFIX 22 FS key switch 2x90°	
5ACCSE00.0003-000	RAFIX 22 FS key switch 1x90°	
5ACCSE00.0004-000	RAFIX 22 FS+ selector switch 1-90°	
5ACCSE00.0005-000	RAFIX FS 22+ USB IP65 400 mm	

4.2.7.1.3 Technical data

> **Information:**
>
> **The following specified characteristic data, features and limit values are only valid for these individual components and may differ from those of the complete system. The data specified for the complete system applies to the complete system in which this individual component is used, for example.**

Order number	5ACCKP00.156B-000	5ACCKP00.185B-000	5ACCKP00.215C-000	5ACCKP00.215I-000	5ACCKP00.240C-000
General information					
Certifications					
CE	Yes				
UL	cULus E115267 Industrial control equipment				
EAC	Product family certification				
Features					
Optional operating elements					
Quantity	10	11	13	7	14

Order number	5ACCKP00.156B-000	5ACCKP00.185B-000	5ACCKP00.215C-000	5ACCKP00.215I-000	5ACCKP00.240C-000
Operating conditions					
Pollution degree per EN 61131-2	Pollution degree 2				
Mechanical properties					
Material	Steel sheet				
Weight	600 g		800 g	500 g	900 g

4.2.7.2 5ACCKP01.xxxx-000

4.2.7.2.1 General information

5ACCKP01.xxxx-000 expansion units are equipped with various operating elements as well as a USB interface and can be installed in Automation Panel 5230.

- Expansion units
- Front USB interface
- Green and red pushbuttons
- Selector switch
- Key switch
- Emergency stop

4.2.7.2.2 Order data

Order number	Short description	Figure
	Expansion units	
5ACCKP01.156B-000	AP5000 swing arm expansion option - Expansion unit - 1x emergency stop - 2x pushbutton (red and green) - 1x selector switch - 1x key switch - 1x front USB interface - For panel 5AP5230.156B/156C-000	
5ACCKP01.185B-000	AP5000 swing arm expansion option - Expansion unit - 1x emergency stop - 2x pushbutton (red and green) - 1x selector switch - 1x key switch - 1x front USB interface - For panel 5AP5230.185B/185C-000	
5ACCKP01.215C-000	AP5000 swing arm expansion option - Expansion unit - 1x emergency stop - 2x pushbutton (red and green) - 1x selector switch - 1x key switch - 1x front USB interface - For panel 5AP5230.215C-000	
5ACCKP01.215I-000	AP5000 swing arm expansion option - Expansion unit - 1x emergency stop - 2x pushbutton (red and green) - 1x selector switch - 1x key switch - 1x front USB interface - For panel 5AP5230.215I-000	
5ACCKP01.240C-000	AP5000 swing arm expansion option - Expansion unit - 1x emergency stop - 2x pushbutton (red and green) - 1x selector switch - 1x key switch - 1x front USB interface - For panel 5AP5230.240C-000	

4.2.7.2.3 Technical data

Information:

The following specified characteristic data, features and limit values are only valid for these individual components and may differ from those of the complete system. The data specified for the complete system applies to the complete system in which this individual component is used, for example.

Order number	5ACCKP01.156B-000	5ACCKP01.185B-000	5ACCKP01.215C-000	5ACCKP01.215I-000	5ACCKP01.240C-000
General information					
Certifications					
CE	Yes				
UL	cULus E115267 Industrial control equipment				
EAC	Product family certification				
Interfaces					
USB					
Quantity	1				
Type	USB 2.0				
Variant	Type A				
Transfer rate	Low speed (1.5 Mbit/s), full speed (12 Mbit/s) to high speed (480 Mbit/s)				
Current-carrying capacity	500 mA				
Features					
Pushbuttons					
Quantity	2 (green, red)				
Type	RAFIX 22 FS+, 1.30.270.021/2500 (green), 1.30.270.021/2300 (red)				
Contact element	Momentary				
Selector switch					
Quantity	1				
Type	RAFIX 22 FS+, 1.30.272.102/2200				
Contact element	Maintained				
Key switch					
Quantity	1				
Type	RAFIX 22 FS 1.30.255.222/0000				
Contact element	Maintained				

Order number	5ACCKP01.156B-000	5ACCKP01.185B-000	5ACCKP01.215C-000	5ACCKP01.215I-000	5ACCKP01.240C-000
Emergency stop					
Quantity	1				
Type	RAFIX 22 FS+, Plus 1, 1.30.273.512/0300				
Contact element	Maintained				
Operating conditions					
Pollution degree per EN 61131-2	Pollution degree 2				
Mechanical properties					
Material	Steel sheet				
Weight	800 g	900 g	1000 g	700 g	1100 g

4.2.7.2.4 USB interface

The expansion unit is equipped with a USB 2.0 interface. This is equipped with a protective cover.

Caution!

IP65 protection can only be achieved if the USB protective cover is properly installed.

Warning!

USB peripheral devices can be connected to the USB interfaces. Due to the variety of USB devices available on the market, B&R cannot guarantee their functionality. The functionality of USB devices available from B&R is ensured.

Caution!

Due to the general PC specification, this interface must be handled with the utmost care with regard to EMC, cable routing, etc.

The USB interface is internally connected to the system via USB 2.0 and available to the user for service purposes.

Front USB of the expansion unit[1]	
Standard	USB 2.0
Variant	Type A, female
Transfer rate	Low speed (1.5 Mbit/s)
	Full speed (12 Mbit/s)
	High speed (480 Mbit/s)[2]
Current-carrying capacity[3]	Max. 0.5 A
Cable length	
USB 2.0	<3 m (without hub)
-	

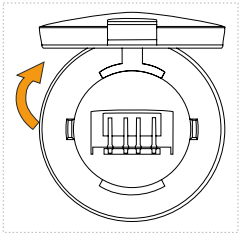

1) The interfaces, etc. available on the device or module have been numbered for the purpose of clear differentiation. This numbering may deviate from the numbering used by the respective operating system, however.
2) In SDL operation without USB cable (mode 1), the USB transfer rate is limited to USB 1.1.
In SDL3 operation: Low speed (1.5 Mbit/s), full speed (12 Mbit/s) to high speed (30 Mbit/s)
In SDL4 operation: Low speed (1.5 Mbit/s), full speed (12 Mbit/s) to high speed (150 Mbit/s)
3) The USB interface is protected by a maintenance-free "USB current-limiting switch" (max. 0.5 A).

4.2.7.3 5ACCKP03.xxxx-000

4.2.7.3.1 General information

5ACCKP03.xxxx-000 expansion units are equipped with various operating elements as well as interfaces (e.g. USB, RFID). They can be installed in Automation Panel 5230.

- Expansion units
- Front USB interface
- Green and red pushbuttons
- Selector switch
- Key switch
- Emergency stop
- RFID read/write unit

4.2.7.3.2 Order data

Order number	Short description	Figure
	Expansion units	
5ACCKP03.185B-000	AP5000 swing arm expansion option - Expansion unit - 1x RFID read/write unit - 1x emergency stop - 2x pushbutton (red and green) - 1x selector switch - 1x key switch - 1x front USB interface - For panel 5AP5230.185B/185C-000	
5ACCKP03.215C-000	AP5000 swing arm expansion option - Expansion unit - 1x RFID read/write unit - 1x emergency stop - 2x pushbutton (red and green) - 1x selector switch - 1x key switch - 1x front USB interface - For panel 5AP5230.215C-000	
5ACCKP03.240C-000	AP5000 swing arm expansion option - Expansion unit - 1x RFID read/write unit - 1x emergency stop - 2x pushbutton (red and green) - 1x selector switch - 1x key switch - 1x front USB interface - For panel 5AP5230.240C-000	

4.2.7.3.3 Technical data

Information:

The following specified characteristic data, features and limit values are only valid for these individual components and may differ from those of the complete system. The data specified for the complete system applies to the complete system in which this individual component is used, for example.

Order number	5ACCKP03.185B-000	5ACCKP03.215C-000	5ACCKP03.240C-000
General information			
Certifications			
CE	Yes		
UL	cULus E115267 Industrial control equipment		
FCC	Contains FCC ID: 2ADFV-RFM-2-NF		
IC	Contains IC: 12444A-RFM2NF		
Interfaces			
USB			
Quantity	1		
Type	USB 2.0		
Variant	Type A		
Transfer rate	Low speed (1.5 Mbit/s), full speed (12 Mbit/s) to high speed (480 Mbit/s)		
Current-carrying capacity	500 mA		
RFID read/write transponder unit			
Variant	RFM-2-NF		
Type	ELATEC TWN4 MultiTech Nano		
Frequency	Short range device (SRD) 13.56 MHz		
Output power	Max. 8.13 dB µA/m @10 m		
Standard	ISO14443A/B, ISO15693, ISO18092 / ECMA-340 (NFC)		
Read/Write range in air	Up to 2 cm (depends on transponder)		
Features			
Pushbuttons			
Quantity	2 (green, red)		
Type	RAFIX 22 FS+, 1.30.270.021/2500 (green), 1.30.270.021/2300 (red)		
Contact element	Momentary		
Selector switch			
Quantity	1		
Type	RAFIX 22 FS+, 1.30.272.102/2200		
Contact element	Maintained		

Order number	5ACCKP03.185B-000	5ACCKP03.215C-000	5ACCKP03.240C-000
Key switch			
Quantity		1	
Type		RAFIX 22 FS 1.30.255.222/0000	
Contact element		Maintained	
Emergency stop			
Quantity		1	
Type		RAFIX 22 FS+, Plus 1, 1.30.273.512/0300	
Contact element		Maintained	
Operating conditions			
Pollution degree per EN 61131-2		Pollution degree 2	
Mechanical properties			
Material		Steel sheet	
Weight	900 g	1000 g	1100 g

4.2.7.3.4 B&R wireless assembly

B&R wireless assembly RFM-2-NF of 5ACCKP03.xxxx-000 or 5ACCK05.xxxx-000 expansion units consists of the following wireless module:

- SRD (RFID/NFC) module TWN4 MultiTech Nano from Elatec with circuit board antenna from B&R.

The B&R wireless assembly must be connected internally to the system using the USB 2.0 cable.

4.2.7.3.4.1 Drivers, software and documentation

Drivers, software tools and documentation for approved operating systems are available for download in the Downloads section of the B&R website (www.br-automation.com). The software packages for the TWN4 MultiTech Nano with the TWN4 Simple Protocol must be used.

4.2.7.3.5 USB interface

The expansion unit is equipped with a USB 2.0 interface. This is equipped with a protective cover.

Caution!

IP65 protection can only be achieved if the USB protective cover is properly installed.

Warning!

USB peripheral devices can be connected to the USB interfaces. Due to the variety of USB devices available on the market, B&R cannot guarantee their functionality. The functionality of USB devices available from B&R is ensured.

Caution!

Due to the general PC specification, this interface must be handled with the utmost care with regard to EMC, cable routing, etc.

The USB interface is internally connected to the system via USB 2.0 and available to the user for service purposes.

Front USB of the expansion unit[1]		
Standard	USB 2.0	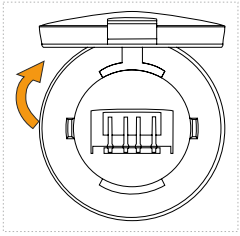
Variant	Type A, female	
Transfer rate	Low speed (1.5 Mbit/s)	
	Full speed (12 Mbit/s)	
	High speed (480 Mbit/s)[2]	
Current-carrying capacity[3]	Max. 0.5 A	
Cable length		
USB 2.0	<3 m (without hub)	
-		

1) The interfaces, etc. available on the device or module have been numbered for the purpose of clear differentiation. This numbering may deviate from the numbering used by the respective operating system, however.
2) In SDL operation without USB cable (mode 1), the USB transfer rate is limited to USB 1.1.
In SDL3 operation: Low speed (1.5 Mbit/s), full speed (12 Mbit/s) to high speed (30 Mbit/s)
In SDL4 operation: Low speed (1.5 Mbit/s), full speed (12 Mbit/s) to high speed (150 Mbit/s)
3) The USB interface is protected by a maintenance-free "USB current-limiting switch" (max. 0.5 A).

4.2.7.4 5ACCKP04.xxxx-000

4.2.7.4.1 General information

5ACCKP04.xxxx-000 expansion units are equipped with various operating elements as well as an interface (e.g. USB). They can be installed in Automation Panel 5230.

- Expansion units
- Front USB interface
- Blue, green and red pushbuttons
- Key switch
- Emergency stop

4.2.7.4.2 Order data

Order number	Short description	Figure
	Expansion units	
5ACCKP04.156B-000	AP5000 swing arm expansion option - Expansion unit - 1x emergency stop - 3x pushbutton (red, green, blue) - 1x key switch - 1x front USB interface - For panel 5AP5230.156B/156C-000	
5ACCKP04.185B-000	AP5000 swing arm expansion option - Expansion unit - 1x emergency stop - 3x pushbutton (red, green, blue) - 1x key switch - 1x front USB interface - For panel 5AP5230.185B/185C-000	
5ACCKP04.215C-000	AP5000 swing arm expansion option - Expansion unit - 1x emergency stop - 3x pushbutton (red, green, blue) - 1x key switch - 1x front USB interface - For panel 5AP5230.215C-000	
5ACCKP04.215I-000	AP5000 swing arm expansion option - Expansion unit - 1x emergency stop - 3x pushbutton (red, green, blue) - 1x key switch - 1x front USB interface - For panel 5AP5230.215I-000	
5ACCKP04.240C-000	AP5000 swing arm expansion option - Expansion unit - 1x emergency stop - 3x pushbutton (red, green, blue) - 1x key switch - 1x front USB interface - For panel 5AP5230.240C-000	

4.2.7.4.3 Technical data

Information:

The following specified characteristic data, features and limit values are only valid for these individual components and may differ from those of the complete system. The data specified for the complete system applies to the complete system in which this individual component is used, for example.

Order number	5ACCKP04.156B-000	5ACCKP04.185B-000	5ACCKP04.215C-000	5ACCKP04.215I-000	5ACCKP04.240C-000
General information					
Certifications					
CE	Yes				
UL	cULus E115267 Industrial control equipment				
EAC	Product family certification				
Interfaces					
USB					
Quantity	1				
Type	USB 2.0				
Variant	Type A				
Transfer rate	Low speed (1.5 Mbit/s), full speed (12 Mbit/s) to high speed (480 Mbit/s)				
Current-carrying capacity	500 mA				
Features					
Pushbuttons					
Quantity	3 (blue, green, red)				
Type	RAFIX 22 FS+, 1.30.270.021/2600 (blue), 1.30.270.021/2500 (green), 1.30.270.021/2300 (red)				
Contact element	Momentary				
Key switch					
Quantity	1				
Type	RAFIX 22 FS 1.30.255.222/0000				
Contact element	Maintained				
Emergency stop					
Quantity	1				
Type	RAFIX 22 FS+, Plus 1, 1.30.273.512/0300				
Contact element	Maintained				
Operating conditions					
Pollution degree per EN 61131-2	Pollution degree 2				
Mechanical properties					
Material	Steel sheet				
Weight	800 g	900 g	1000 g	700 g	1100 g

4.2.7.4.4 USB interface

The expansion unit is equipped with a USB 2.0 interface. This is equipped with a protective cover.

Caution!

IP65 protection can only be achieved if the USB protective cover is properly installed.

Warning!

USB peripheral devices can be connected to the USB interfaces. Due to the variety of USB devices available on the market, B&R cannot guarantee their functionality. The functionality of USB devices available from B&R is ensured.

Caution!

Due to the general PC specification, this interface must be handled with the utmost care with regard to EMC, cable routing, etc.

The USB interface is internally connected to the system via USB 2.0 and available to the user for service purposes.

Front USB of the expansion unit[1]		
Standard	USB 2.0	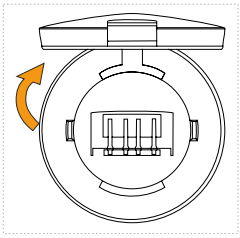
Variant	Type A, female	
Transfer rate	Low speed (1.5 Mbit/s)	
	Full speed (12 Mbit/s)	
	High speed (480 Mbit/s)[2]	
Current-carrying capacity[3]	Max. 0.5 A	
Cable length		
USB 2.0	<3 m (without hub)	
-		

1) The interfaces, etc. available on the device or module have been numbered for the purpose of clear differentiation. This numbering may deviate from the numbering used by the respective operating system, however.
2) In SDL operation without USB cable (mode 1), the USB transfer rate is limited to USB 1.1.
In SDL3 operation: Low speed (1.5 Mbit/s), full speed (12 Mbit/s) to high speed (30 Mbit/s)
In SDL4 operation: Low speed (1.5 Mbit/s), full speed (12 Mbit/s) to high speed (150 Mbit/s)
3) The USB interface is protected by a maintenance-free "USB current-limiting switch" (max. 0.5 A).

4.2.7.5 5ACCKP05.xxxx-000

4.2.7.5.1 General information

5ACCKP05.xxxx-000 expansion units are equipped with various operating elements as well as interfaces (e.g. USB, RFID). They can be installed in Automation Panel 5230.

- Expansion units
- Front USB interface
- Blue, green and red pushbuttons
- Key switch
- Emergency stop
- RFID read/write unit

4.2.7.5.2 Order data

Order number	Short description	Figure
	Expansion units	
5ACCKP05.185B-000	AP5000 swing arm expansion option - Expansion unit - 1x RFID read/write unit - 1x emergency stop - 3x pushbutton (red, green, blue) - 1x key switch - 1x front USB interface - For panel 5AP5230.185B/185C-000	
5ACCKP05.215C-000	AP5000 swing arm expansion option - Expansion unit - 1x RFID read/write unit - 1x emergency stop - 3x pushbutton (red, green, blue) - 1x key switch - 1x front USB interface - For panel 5AP5230.215C-000	
5ACCKP05.240C-000	AP5000 swing arm expansion option - Expansion unit - 1x RFID read/write unit - 1x emergency stop - 3x pushbutton (red, green, blue) - 1x key switch - 1x front USB interface - For panel 5AP5230.240C-000	

4.2.7.5.3 Technical data

Information:

The following specified characteristic data, features and limit values are only valid for these individual components and may differ from those of the complete system. The data specified for the complete system applies to the complete system in which this individual component is used, for example.

Order number	5ACCKP05.185B-000	5ACCKP05.215C-000	5ACCKP05.240C-000
General information			
Certifications			
CE	Yes		
UL	cULus E115267 Industrial control equipment		
FCC	Contains FCC ID: 2ADFV-RFM-2-NF		
IC	Contains IC: 12444A-RFM2NF		
Interfaces			
USB			
Quantity	1		
Type	USB 2.0		
Variant	Type A		
Transfer rate	Low speed (1.5 Mbit/s), full speed (12 Mbit/s) to high speed (480 Mbit/s)		
Current-carrying capacity	500 mA		
RFID read/write transponder unit			
Variant	RFM-2-NF		
Type	ELATEC TWN4 MultiTech Nano		
Frequency	Short range device (SRD) 13.56 MHz		
Output power	Max. 8.13 dB µA/m @10 m		
Standard	ISO14443A/B, ISO15693, ISO18092 / ECMA-340 (NFC)		
Read/Write range in air	Up to 2 cm (depends on transponder)		
Features			
Pushbuttons			
Quantity	3 (blue, green, red)		
Type	RAFIX 22 FS+, 1.30.270.021/2600 (blue), 1.30.270.021/2500 (green), 1.30.270.021/2300 (red)		
Contact element	Momentary		
Key switch			
Quantity	1		
Type	RAFIX 22 FS 1.30.255.222/0000		
Contact element	Maintained		

Order number	5ACCKP05.185B-000	5ACCKP05.215C-000	5ACCKP05.240C-000
Emergency stop			
Quantity	1		
Type	RAFIX 22 FS+, Plus 1, 1.30.273.512/0300		
Contact element	Maintained		
Operating conditions			
Pollution degree per EN 61131-2	Pollution degree 2		
Mechanical properties			
Material	Steel sheet		
Weight	900 g	1000 g	1100 g

4.2.7.5.4 B&R wireless assembly

B&R wireless assembly RFM-2-NF of 5ACCKP03.xxxx-000 or 5ACCK05.xxxx-000 expansion units consists of the following wireless module:

- SRD (RFID/NFC) module TWN4 MultiTech Nano from Elatec with circuit board antenna from B&R.

The B&R wireless assembly must be connected internally to the system using the USB 2.0 cable.

4.2.7.5.4.1 Drivers, software and documentation

Drivers, software tools and documentation for approved operating systems are available for download in the Downloads section of the B&R website (www.br-automation.com). The software packages for the TWN4 MultiTech Nano with the TWN4 Simple Protocol must be used.

4.2.7.5.5 USB interface

The expansion unit is equipped with a USB 2.0 interface. This is equipped with a protective cover.

Caution!

IP65 protection can only be achieved if the USB protective cover is properly installed.

Warning!

USB peripheral devices can be connected to the USB interfaces. Due to the variety of USB devices available on the market, B&R cannot guarantee their functionality. The functionality of USB devices available from B&R is ensured.

Caution!

Due to the general PC specification, this interface must be handled with the utmost care with regard to EMC, cable routing, etc.

The USB interface is internally connected to the system via USB 2.0 and available to the user for service purposes.

Front USB of the expansion unit[1]		
Standard	USB 2.0	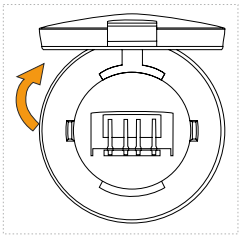
Variant	Type A, female	
Transfer rate	Low speed (1.5 Mbit/s)	
	Full speed (12 Mbit/s)	
	High speed (480 Mbit/s)[2]	
Current-carrying capacity[3]	Max. 0.5 A	
Cable length		
USB 2.0	<3 m (without hub)	
-		

1) The interfaces, etc. available on the device or module have been numbered for the purpose of clear differentiation. This numbering may deviate from the numbering used by the respective operating system, however.
2) In SDL operation without USB cable (mode 1), the USB transfer rate is limited to USB 1.1.
In SDL3 operation: Low speed (1.5 Mbit/s), full speed (12 Mbit/s) to high speed (30 Mbit/s)
In SDL4 operation: Low speed (1.5 Mbit/s), full speed (12 Mbit/s) to high speed (150 Mbit/s)
3) The USB interface is protected by a maintenance-free "USB current-limiting switch" (max. 0.5 A).

4.2.7.6 5ACCKPSx.xxxx-xxx

Safe variants of expansion units are also available. For details, see www.br-automation.com.

4.2.8 Handles

4.2.8.1 5ACCHD0x.xxxx-000

4.2.8.1.1 General information

Handles can be installed on the side of the panel to improve its ergonomic properties and ease of use.

Handles are not factory-installed and must be mounted after delivery. For information about installation, see section "Installing the handles" on page 187.

4.2.8.1.2 Order data

Order number	Short description	Figure
	Handles	
5ACCHD00.1505-000	AP5000 swing arm handles - For panel 5AP5120.1505-000	
5ACCHD00.156B-000	AP5000 swing arm handles - For panel 5AP5130.156B/156C-000	
5ACCHD00.185B-000	AP5000 swing arm handles - For panel 5AP5130.185B/185C-000	
5ACCHD00.1906-000	AP5000 swing arm handles - For panel 5AP5120.1906-000	
5ACCHD00.215C-000	AP5000 swing arm handles - For panel 5AP5130.215C-000	
5ACCHD00.240C-000	AP5000 swing arm handles - For panel 5AP5130.240C-000	
5ACCHD01.156B-000	AP5000 swing arm handles - For panel 5AP5230.156B/156C-000	
5ACCHD01.185B-000	AP5000 swing arm handles - For panel 5AP5230.185B/185C-000	
5ACCHD01.215C-000	AP5000 swing arm handles - For panel 5AP5230.215C-000	
5ACCHD01.215I-000	AP5000 swing arm handles - For panel 5AP5230.215I-000	
5ACCHD01.240C-000	AP5000 swing arm handles - For panel 5AP5230.240C-000	

4.2.8.1.3 Technical data

Information:

The following specified characteristic data, features and limit values are only valid for these individual components and may differ from those of the complete system. The data specified for the complete system applies to the complete system in which this individual component is used, for example.

5ACCHD00.xxxx-000

Order number	5ACCHD00. 1505-000	5ACCHD00. 156B-000	5ACCHD00. 185B-000	5ACCHD00. 1906-000	5ACCHD00. 215C-000	5ACCHD00. 240C-000
General information						
Certifications						
CE	Yes					
EAC	Product family certification					
UL	cULus E115267 Industrial control equipment					
Operating conditions						
Pollution degree per EN 61131-2	Pollution degree 2					
Mechanical properties						
Material	Aluminum, coated					
Coating	White aluminum					
Dimensions						
Height	299 mm	269.5 mm	306 mm	372 mm	344 mm	375 mm
Weight	500 g	300 g	500 g	600 g		

5ACCHD01.xxxx-000

Order number	5ACCHD01.156B-000	5ACCHD01.185B-000	5ACCHD01.215C-000	5ACCHD01.215I-000	5ACCHD01.240C-000
General information					
Certifications					
CE	Yes				
EAC	Product family certification				
UL	cULus E115267 Industrial control equipment				
Operating conditions					
Pollution degree per EN 61131-2	Pollution degree 2				
Mechanical properties					
Material	Aluminum, coated				
Coating	White aluminum				
Dimensions					
Height	349 mm	385.5 mm	423.5 mm	632 mm	454.5 mm
Weight	600 g	700 g		1000 g	800 g

4.2.8.1.4 Content of delivery

- 2x handles
- 4x Torx screws (T20)

5 Installation and wiring

5.1 Basic information

> **A damaged device has unpredictable properties and states. The unintentional installation or startup of a damaged device must be prevented. The damaged device must be marked as such and made inaccessible, or it must be returned for repairs immediately.**

Unpacking

The following activities must be performed before unpacking the device:

- Check the packaging for visible transport damage.
- If transport damage is noticeable, document this immediately and submit a complaint. If possible, have the damage confirmed by the carrier/delivery service.
- Check the contents of the shipment for completeness and damage.
- If the contents of the packaging are incomplete, damaged or do not correspond to the order, the responsible sales office or B&R Headquarters must be informed immediately.
- The information in section "Protection against electrostatic discharge" on page 12 must be observed for unpacked devices and components.
- Keep the original packaging for further transport.

Power supply

The following information is generally applicable and should be observed before performing any work on the device:

- The entire power supply must be disconnected before removing any covers or components from the device and installing or removing any accessories, hardware or cables.
- Remove the power cable from the device and from the power supply.
- All covers and components, accessories, hardware and cables must be installed or secured before the device is connected to the power supply and switched on.

> **Caution!**
>
> **Energy regeneration is not permitted and can cause damage or the device to become defective. Built-in or connected peripheral devices (e.g. USB hubs) are not permitted to introduce any voltage into the device.**

Installation

> **Information:**
>
> **Optional sets are available that contain all necessary tools for installation. For additional information about tool sets, see section "Installation accessories" on page 273.**

Before installation

The following activities and limitations must be observed before installing the device.

- Allow sufficient space for installation, operation and maintenance of the device.
- The device must be installed on a flat, clean and burr-free surface.
- The wall or control cabinet plate must be able to support four times the total weight of the device. If necessary, bracing must be attached to reinforce the mounting surface.

  > **Caution!**
  >
  > **If the load-bearing capacity of the mounting surface is insufficient, or if the fastening material is inadequate or incorrect, the device may fall and become damaged.**

- To avoid overheating, the device is not permitted to be placed near other heat sources.

Information about the device's environment

- Observe the notes and regulations regarding the power supply and functional ground.
- Observer the specified bend radius when connecting cables.
- Ventilation openings are not permitted to be covered or blocked.
- The device is only permitted to be operated in closed rooms and not permitted to be exposed to direct sunlight.
- The climatic and ambient conditions must be taken into account – see "Environmental properties" on page 36.

General installation instructions

- When connecting installed or connected peripherals, follow the instructions in the peripheral device's documentation.

Information about leak tightness

> **Warning!**
>
> **Failure to follow instructions can result in damage to property.**

- The gasket must be inspected before installation or reinstallation and at regular intervals according to the requirements of the operating environment.
- Replace the entire device if inspection reveals visible scratches, cracks, dirt deposits or excessive wear.
- Do not stretch the gasket unnecessarily.
- It is important to ensure that the gasket is correctly seated all around.
- The housing components must be secured using the specified tightening torque.

Transport and storage

When transporting at low temperatures or in the event of large temperature fluctuations, the collection of moisture in or on the device is not permitted. Moisture can cause short circuits in electrical circuits and damage the device.

If a device is transported or stored without packaging, all environmental influences such as shocks, vibrations, pressure and moisture have an unprotected effect on the device. Damaged packaging indicates that the device has been severely affected by environmental influences and may have been damaged.

This can result in malfunctions of the device, machine or system.

Use of third-party products

If third-party devices or components are used, the relevant manufacturer's documentation must be observed. If limitations or interactions by or with third-party products are possible, this must be taken into account in the application.

5.1.1 Panel PC 2100 - Installation

The Panel PC is installed on a swing arm system using a rotary flange.

5.1.1.1 Installation with flange

Information:

Before installing the Panel PC on a swing arm system, it must be checked as to whether the sealing ring is installed on the flange. In addition, only the flange must be installed on the Panel PC. For the defined procedure, see section **"Installing the 5ACCFL00.0000-000 rotary flange" on page 174****.**

An outer diameter of 47.5 to 48.4 mm is permitted for the swing arm shaft. The end of the swing arm shaft installed on the flange must be chamfered at a 45° angle and deburred.

1. The sealing ring must be placed in the groove of the compression ring.
   Slide the rotary swivel and compression ring onto the swing arm shaft and secure them using the 3 M6 headless screws (hex recess, size 3) (tightening torque 5 Nm). The rings must be installed such that the rotary swivel (with catch) is connected to the flange first. The orientation of the rotary swivel should be taken into account. The distance from the bottom edge of the swing arm shaft and the bottom edge of the rotary swivel must be 21.5 mm ±0.5 mm (corresponds to a distance of 19 mm ±0.5 mm from the bottom edge of the swing arm shaft to the ring catch). Spacing between the two rings is not permitted.

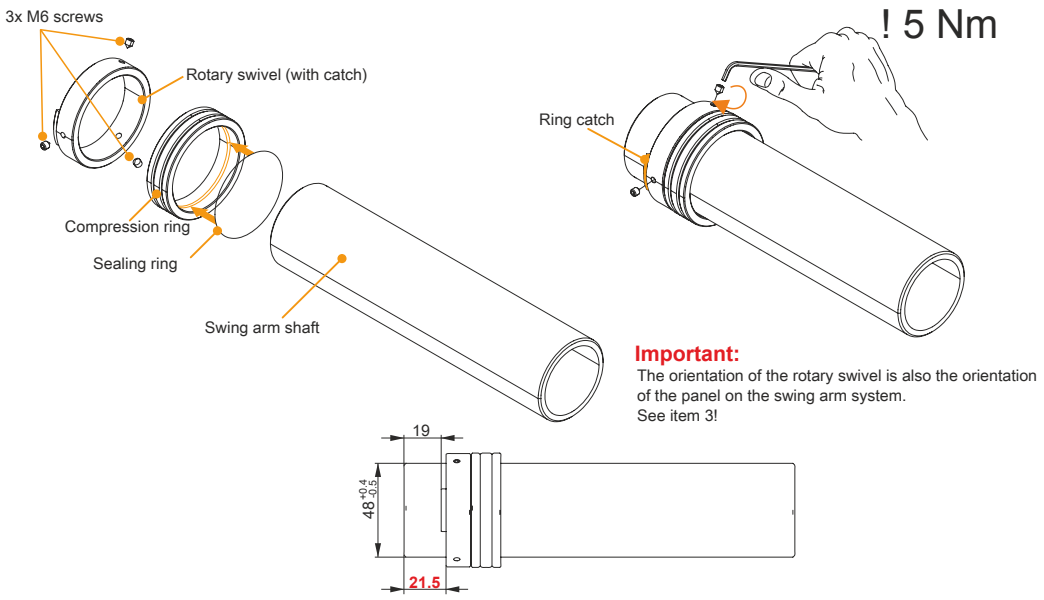

Warning!

The headless screws are equipped with a special screw locking mechanism and only designed to be used once. New headless screws must be used if removing and reinstalling.

Warning!

The distance between the bottom edge of the swing arm shaft and the bottom edge of the rotary swivel must be 21.5 mm ±0.5 mm. If this measurement is not observed, then the Panel PC will not be sufficiently stable.

2. Feed the necessary cables through the swing arm shaft.

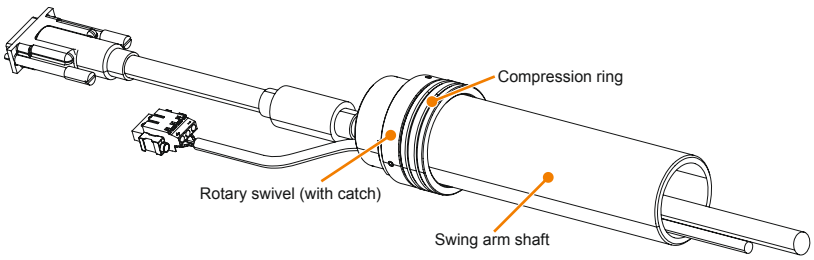

3. Connect the Panel PC to the swing arm system. The rings must be installed in such a way that the ring catch of the rotary swivel points forward towards the panel. The Panel PC has been installed correctly if the upper ring is flush with the flange. Fasten the assembly to the swing arm shaft using the 3 M6 headless screws (hex recess, size 3) with a tightening torque of 5 Nm.

   Installation on a swing arm system is possible from the top or bottom depending on how the mounting unit is installed on the panel and the resulting position of the flange output.

Caution!

After setting the rotation and/or tilt angle, the corresponding locking lever must be locked into position. For the maximum tightening torques, see the description of the flange used.

The screw in the locking lever is not permitted to be tightened. Fixing must be carried out exclusively with the locking lever.

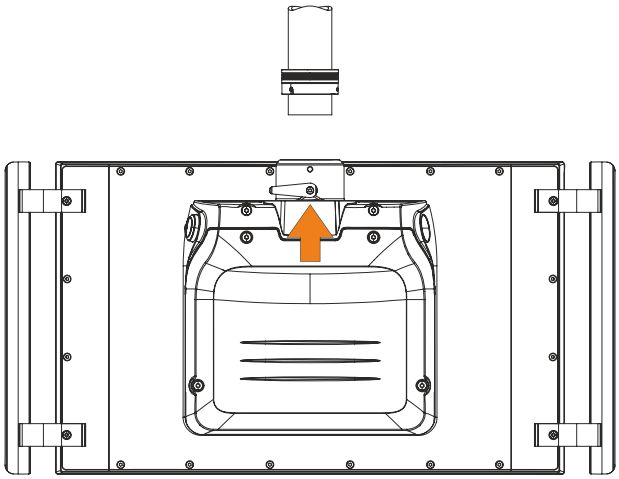

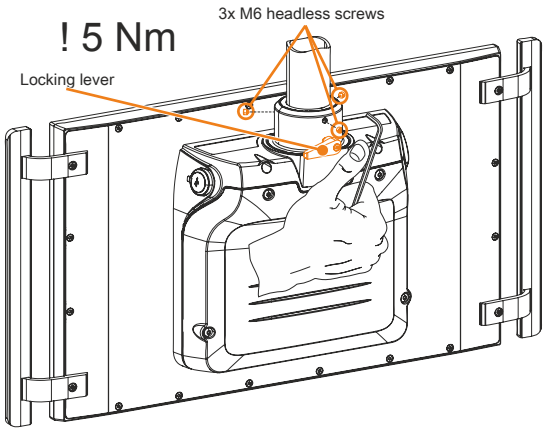

5.1.2 Removing the mounting unit cover

1. Disconnect the power supply cable to the Panel PC (disconnect the power cable!). Disconnect from all sources and poles!
2. Carry out electrostatic discharge at the ground connection.
3. Remove the Torx screws (T25) indicated in the following figure. Insert a flat-blade screwdriver into the slot from the side and remove the cover. Avoid causing irreparable damage to the gasket.

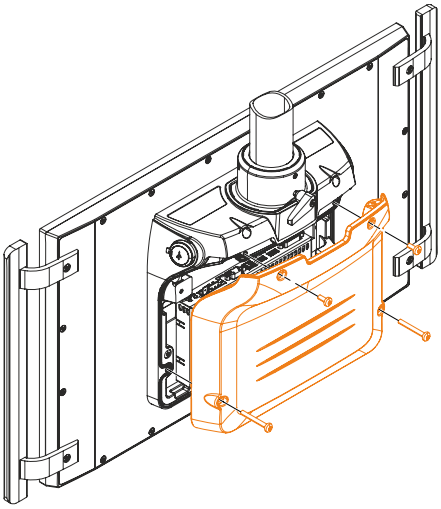

4. Replace the mounting unit cover with the 4 Torx screws removed earlier (tightening torque of the M5x12 screws: 2.5 Nm, for the M5x40 screws: 4.0 Nm). The cover must be installed correctly to ensure IP65 protection.

5.1.3 Disassembling the heat pipe

1. Disconnect the power supply cable to the Panel PC (disconnect the power cable!). Disconnect from all sources and poles!
2. Carry out electrostatic discharge at the ground connection.
3. Remove the mounting unit cover, see "Removing the mounting unit cover" on page 170.
4. Disconnect all connected cables.
5. Disconnect the Panel PC from the swing arm system by following the steps provided in section "Panel PC 2100 - Installation" on page 168 in reverse order.
6. Remove the Torx screws (T20) indicated in the following figure.

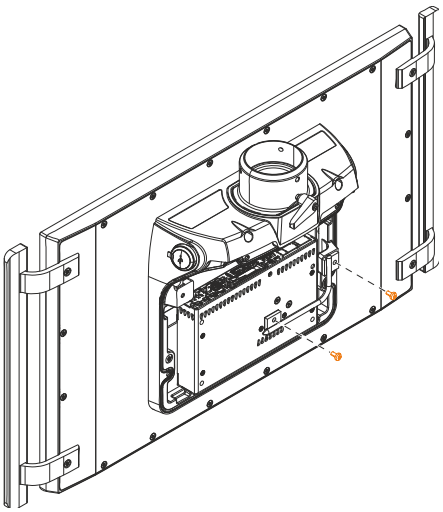

7. Heat pipe 5ACCHP00.0000-0005ACCHP00 can be removed.

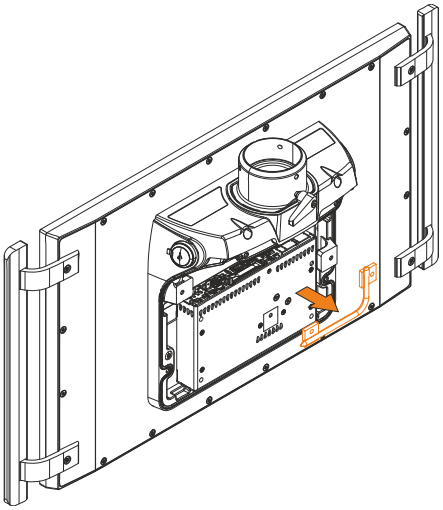

8. The heat pipe is installed by performing these steps in reverse order. The max. tightening torque of the Torx screws (T20) is 1.24 Nm.
9. Replace the mounting unit cover with the 4 Torx screws (T25) removed earlier (tightening torque of the M5x12 screws: 3.5 Nm, for the M5x40 screws: 9.75 Nm). The mounting unit cover must be installed correctly to ensure IP65 protection.

5.1.4 Disassembling the system unit

1. Disconnect the power supply cable to the Panel PC (disconnect the power cable!). Disconnect from all sources and poles!
2. Carry out electrostatic discharge at the ground connection.
3. Remove the Torx screws (T25) indicated in the following figure. Insert a flat-blade screwdriver into the slot from the side and remove the cover. Avoid causing irreparable damage to the gasket.

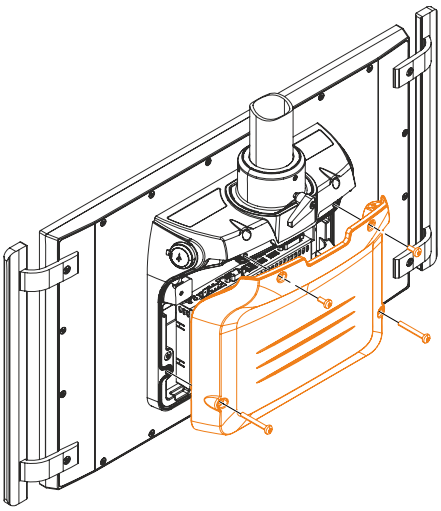

4. Disconnect all connected cables.
5. Disconnect the Panel PC from the swing arm system by performing the steps provided in section "Panel PC 2100 - Installation" on page 168 in reverse order.
6. Place the Panel PC on a clean, flat surface.

> **The following steps can only be performed after the heat pipe has been removed as described in section "Disassembling the heat pipe" on page 171.**

7. Remove the Torx screws (T10) indicated in the following figure.

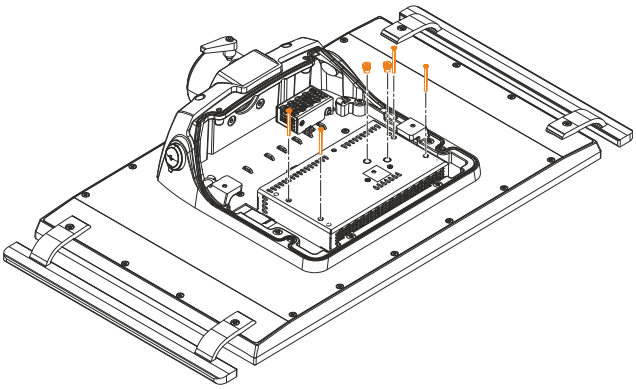

8. Pull firmly and evenly to remove the system unit.

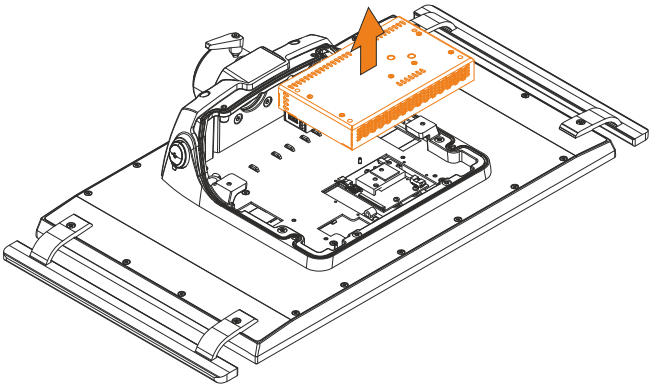

9. The system unit can be reinstalled in reverse order. The max. tightening torque of the Torx screws (T10) is 0.5 Nm.
10. Replace the mounting unit cover with the 4 Torx screws removed earlier (tightening torque of the M5x12 screws: 3.5 Nm, for the M5x40 screws: 9.75 Nm). The cover must be installed correctly to ensure IP65 protection.

5.1.5 Installing the 5ACCFL00.0000-000 rotary flange

The following requirements must be met:

- All connected cables must be disconnected.
- The Panel PC must no longer be installed on the VESA or swing arm system.

1. Disconnect the power supply cable to the Panel PC (disconnect the power cable!). Disconnect from all sources and poles!
2. Carry out electrostatic discharge at the ground connection.
3. Place the Panel PC on a clean, flat surface.
4. Remove the Torx screws (T25) indicated in the following figure. Insert a flat-blade screwdriver into the slot from the side and remove the cover. Avoid causing irreparable damage to the gasket.

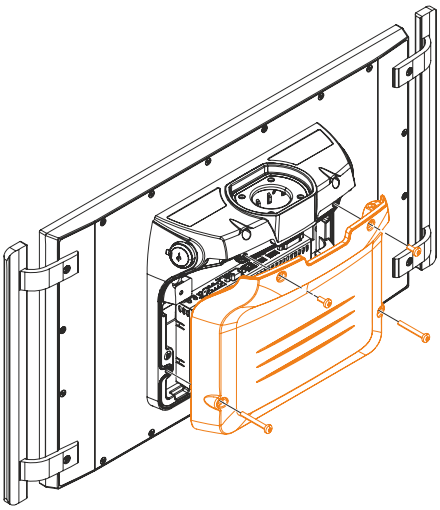

5. The heat pipe and system unit must be removed in that order before the rotary flange can be installed. For the defined procedure, see section "Disassembling the system unit" on page 172.
6. Check whether the sealing ring is inserted in the rotary flange. If the sealing ring is not installed in the rotary flange, it must be inserted into the sealing recess.

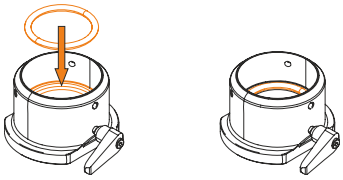

7. Place the rotary flange in the intended opening on the mounting unit with the locking lever pointing towards the mounting unit. Fasten it to the mounting unit using the 4 provided Torx screws (T30) with a tightening torque of 7.2 Nm.

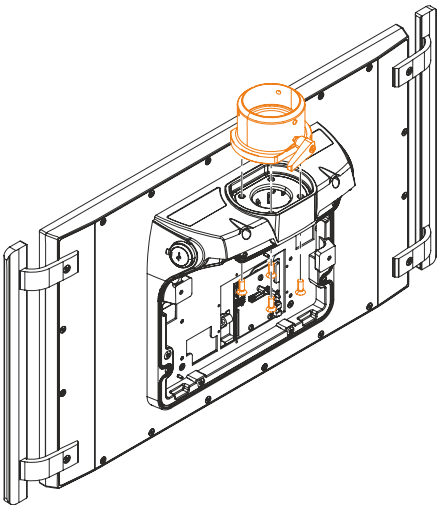

5.1.6 Installing the 5ACCFL00.0100-000 swivel-tilt flange

The following requirements must be met:

- All connected cables must be disconnected.
- The Panel PC must no longer be installed on the VESA or swing arm system.

1. Disconnect the power supply cable to the Panel PC (disconnect the power cable!). Disconnect from all sources and poles!
2. Carry out electrostatic discharge at the ground connection.
3. Place the Panel PC on a clean, flat surface.
4. Loosen the Torx screws (T25) indicated in the following figure. Insert a flat-blade screwdriver into the slot from the side and remove the cover. Avoid causing irreparable damage to the gasket.

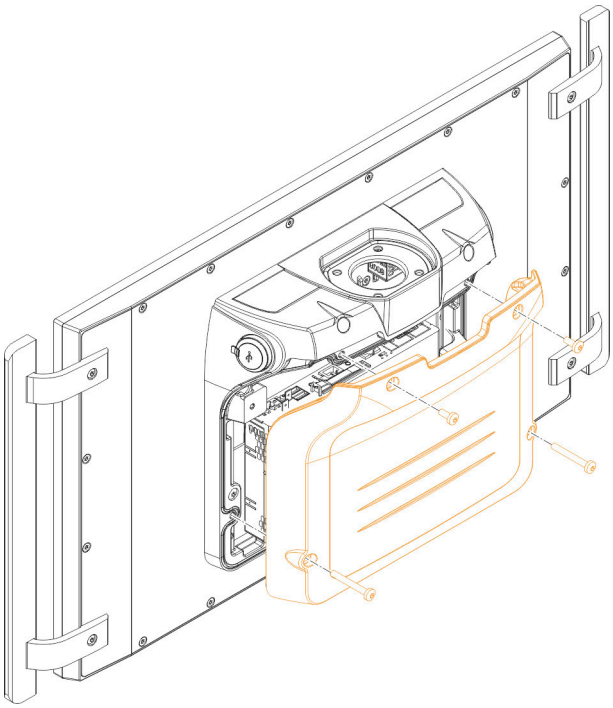

Notice!

Before starting to install the swivel-tilt flange, move it to the zero position!

5. The heat pipe and system unit must be removed in that order before the swivel-tilt flange can be installed. For the defined procedure, see section "Disassembling the system unit" on page 172.
6. Check whether the sealing ring is inserted in the swivel-tilt flange. If the sealing ring is not installed in the swivel-tilt flange, it must be inserted into the sealing recess.

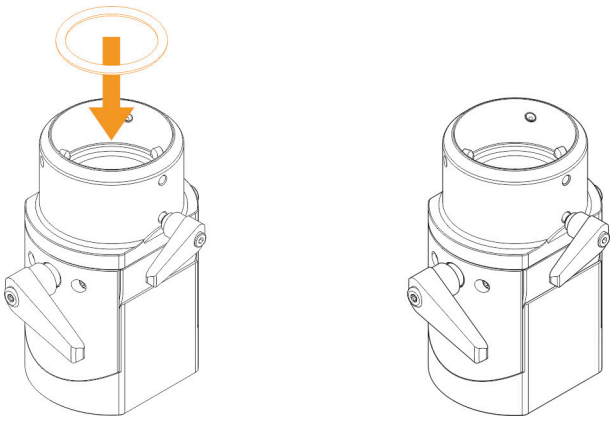

7. Guide the cables to be connected through the swing arm (if this is also newly installed) and the swivel-tilt flange.

Information:

Due to the geometry of the sealing hose, wider connections such as a DVI connection only fit in one direction through the swivel-tilt flange. It is important to ensure that these are guided through the hose at the appropriate angle.

Failure to do so can result in damage to property.

8. Place the swivel-tilt flange in the provided opening on the mounting unit. The locking lever of the swivel-tilt flange must be installed as shown in the following figure. This makes it possible to operate from the rear. Fasten it to the mounting unit using the 4 provided Torx screws (T30) with a tightening torque of 7.2 Nm.

Note:

It is important to ensure that the cables are not pinched!

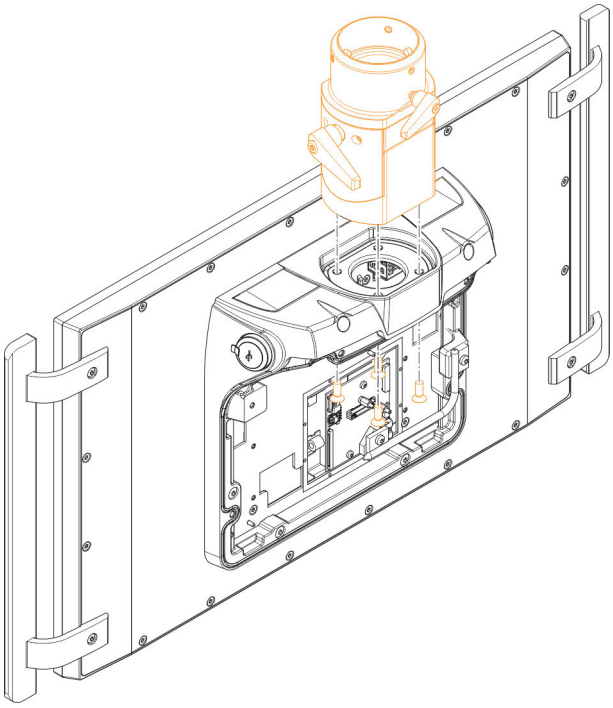

Warning!

The following tightening torques must be observed:

- **Tilt flange locking lever: 7 Nm**
- **Locking lever rotary flange: 5 Nm**

Failure to do so can result in damage to property.

5.1.7 Removing the swing arm mounting unit

The mounting unit can be rotated 180°, which makes it possible to install on a swing arm system from above or below.

The following requirements must be met:

- All connected cables must be disconnected.
- The Panel PC must no longer be installed on the VESA or swing arm system.

1. Disconnect the power supply cable to the Panel PC (disconnect the power cable!). Disconnect from all sources and poles!
2. Carry out electrostatic discharge at the ground connection.
3. Place the Panel PC on a clean, flat surface.
4. Remove the mounting unit cover by following the steps provided in section "Removing the mounting unit cover" on page 170.

> **The following steps can only be performed after the heat pipe has been removed as described in section "Disassembling the heat pipe" on page 171.**

5. Remove the 8 Torx screws used to fasten the mounting unit to the Automation Panel (T25: 2x M5x65, 6x M5x12).

> **Warning!**
>
> **Failure to follow instructions can result in damage to property.**
>
> - The gasket must be inspected before installation or reinstallation and at regular intervals according to the requirements of the operating environment.
> - Replace the entire device if inspection reveals visible scratches, cracks, dirt deposits or excessive wear.
> - Do not stretch the gasket unnecessarily.
> - It is important to ensure that the gasket is correctly seated all around.
> - The housing components must be secured using the specified tightening torque.

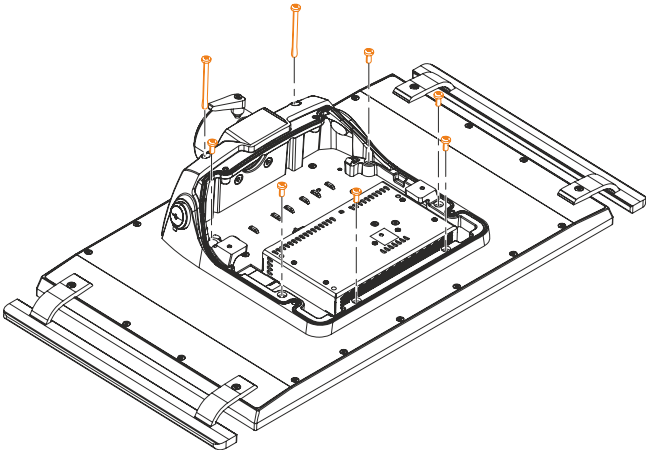

> **Warning!**
>
> **The M5x65 screws are equipped with a special screw locking mechanism and only designed to be used once. New screws must be used if removing and reinstalling.**

6. Pull evenly to remove the mounting unit from the panel.

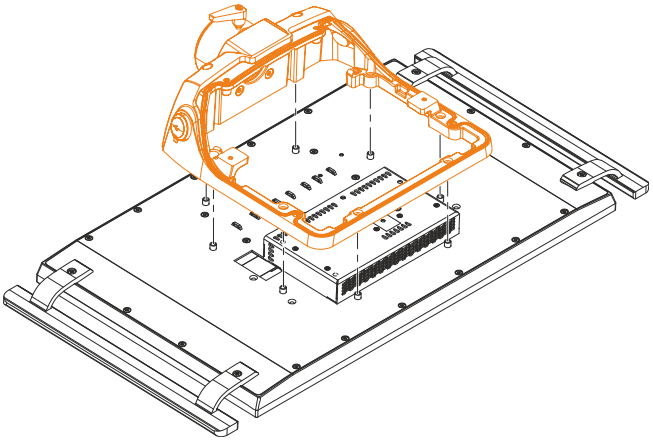

5.1.8 Installing the swing arm mounting unit

The mounting unit can be rotated 180°, which makes it possible to install on a swing arm system from above or below.

The following requirements must be met:

- All connected cables must be disconnected.
- The Panel PC must no longer be installed on the VESA or swing arm system.

1. Disconnect the power supply cable to the Panel PC (disconnect the power cable!). Disconnect from all sources and poles!
2. Carry out electrostatic discharge at the ground connection.
3. Place the Panel PC on a clean, flat surface.
4. Place the mounting unit on the panel. The openings in the mounting unit must be lined up with the mounting pins on the panel.

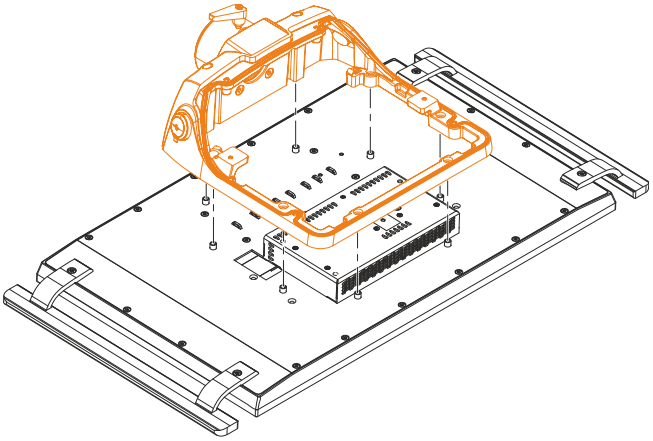

5. Install the mounting unit on the panel using the 8 provided Torx screws (T25: 2x M5x65, 6x M5x12). The tightening torque for each is 2.5 Nm.

> **Warning!**
>
> **Failure to follow instructions can result in damage to property.**

- The gasket must be inspected before installation or reinstallation and at regular intervals according to the requirements of the operating environment.
- Replace the entire device if inspection reveals visible scratches, cracks, dirt deposits or excessive wear.
- Do not stretch the gasket unnecessarily.
- It is important to ensure that the gasket is correctly seated all around.
- The housing components must be secured using the specified tightening torque.

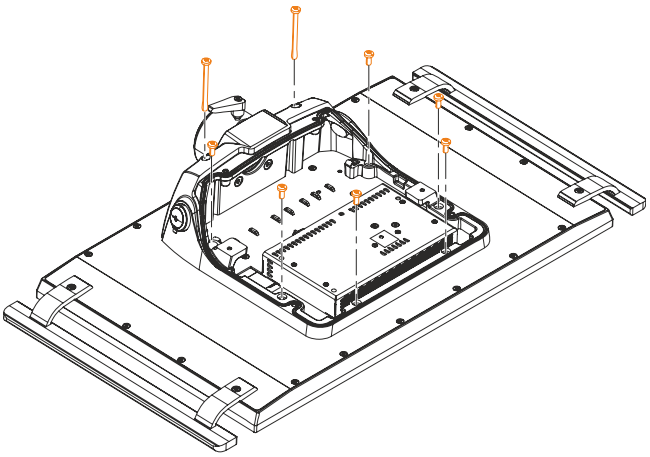

> **Warning!**
>
> **The M5x65 screws are equipped with a special screw locking mechanism and only designed to be used once. New screws must be used if removing and reinstalling.**

6. Install the heat pipe by performing the steps provided in section "Disassembling the heat pipe" on page 171 in reverse order.
7. Install the cover for the mounting unit by performing the steps provided in section "Removing the mounting unit cover" on page 170 in reverse order.

5.1.9 Removing the VESA mounting unit

The following requirements must be met:

- All connected cables must be disconnected.
- The Panel PC must no longer be installed on the VESA or swing arm system.

1. Disconnect the power supply cable to the Panel PC (disconnect the power cable!). Disconnect from all sources and poles!
2. Carry out electrostatic discharge at the ground connection.
3. Place the Panel PC on a clean, flat surface.

> **The following steps can only be performed after the heat pipe has been removed as described in section "Disassembling the heat pipe" on page 171.**

4. Remove the 4 Torx screws (T25: 4x M5x10) and 2 metal pieces (designed for the cable strain relief clip) used to install the mounting unit on the panel.

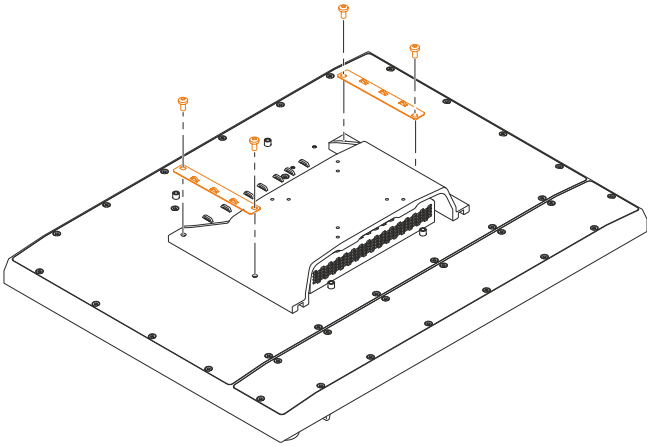

5. Pull evenly to remove the mounting unit from the panel.

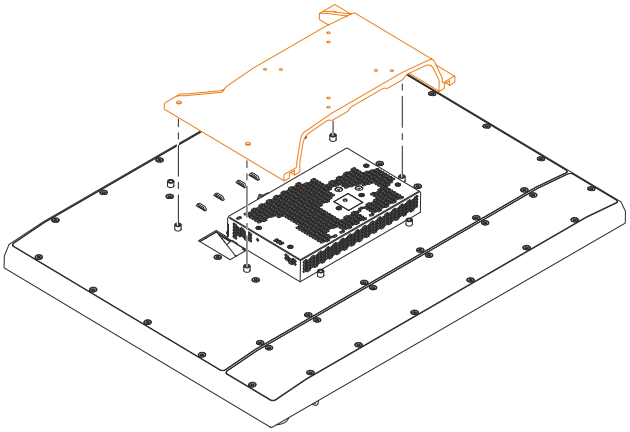

5.1.10 Installing the VESA mounting unit

The following requirements must be met:

- All connected cables must be disconnected.
- The Panel PC must no longer be installed on the VESA or swing arm system.

1. Disconnect the power supply cable to the Panel PC (disconnect the power cable!). Disconnect from all sources and poles!
2. Carry out electrostatic discharge at the ground connection.
3. Place the mounting unit on the panel. The openings in the mounting unit must be lined up with the mounting pins on the panel.

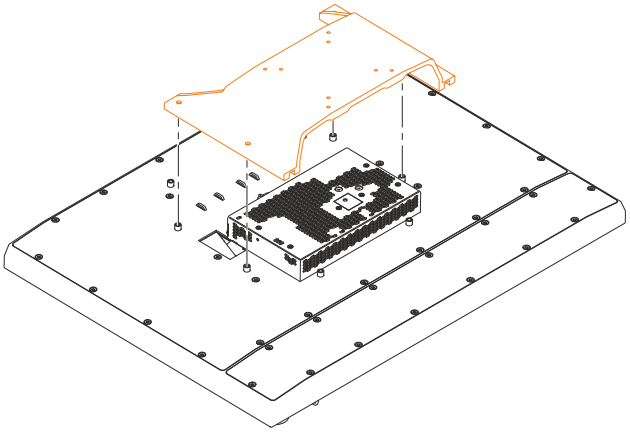

4. Install the mounting unit on the panel using the 4 provided Torx screws (T25: 4x M5x10) and 2 metal pieces (designed for the cable strain relief clip). The tightening torque for each is 3.5 Nm. Follow the order shown in the following figure.

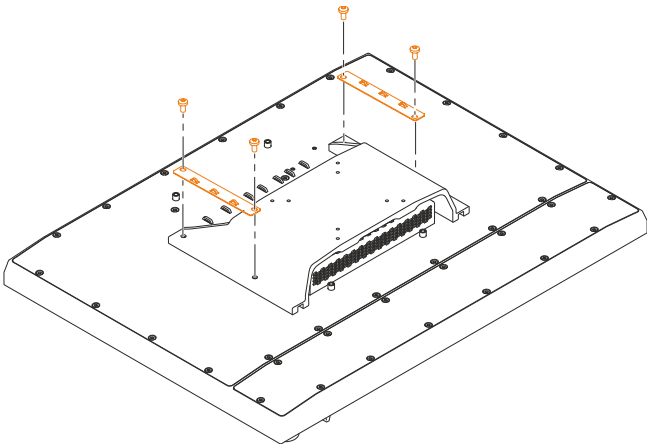

5. Install the heat pipe by performing the steps provided in section "Disassembling the heat pipe" on page 171 in reverse order.
6. 4 Torx screws (T20: 4x M4x10) and 6 cable ties are supplied for fastening the Panel PC to a VESA bracket. Observer the installation notes from the manufacturer.

5.1.11 Installing the IP54 VESA mounting unit

The following requirements must be met:

- All connected cables must be disconnected.
- The Panel PC must no longer be installed on the VESA or swing arm system.

1. Disconnect the power supply cable to the Automation Panel (disconnect the power cable). Disconnect from all sources and poles!
2. Carry out electrostatic discharge at the ground connection.
3. Place the mounting unit frame on the panel. The openings in the frame must be lined up with the mounting pins on the panel.

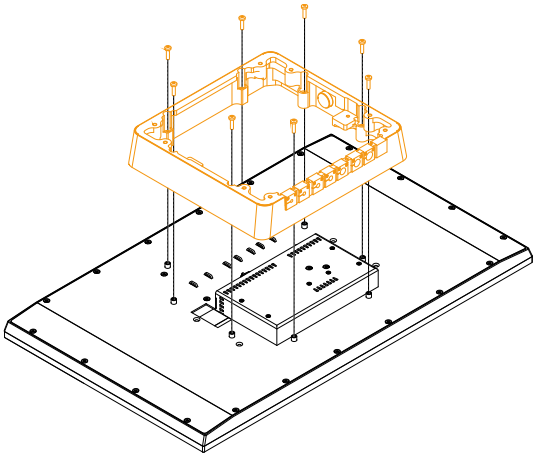

4. Install the frame on the panel using the 8 provided Torx screws (T25: 8x M5x20).
   The tightening torque for each is 2.5 Nm.
5. Secure the cable grommets with the flat side facing upwards.

> **Notice!**
>
> **It is important to note that the cables must first be inserted into the grommets before they are pushed into the guide.**
>
> **Failure to follow this instruction can result in damage to property.**

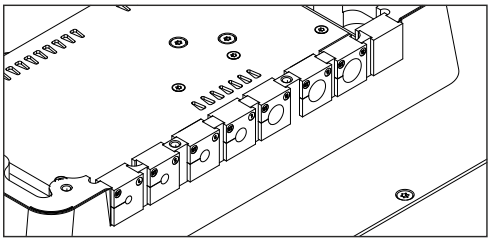

6. If the mounting unit is used in conjunction with a PPC2100, the heat pipe including heat pipe cover must also be installed. The following figure symbolically displays the heat pipe installation.

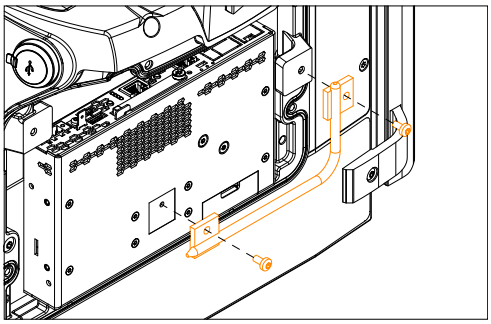

7. Place the mounting unit cover on the frame.

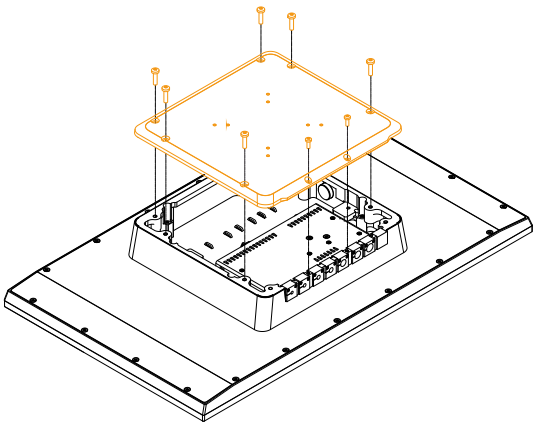

8. Install the cover using the 8 provided Torx screws (T25: 6x M5x20 and T20: 2x M4x12).
   Tightening torque: 2.5 Nm for M5, 1.24 Nm for M4.

5.1.12 Uninstalling the IP54 VESA mounting unit

> **Notice!**
>
> **The following note must be observed when using a PPC2100:**
>
> **The heat pipe can reach an elevated temperature. It is therefore recommended to wait some time after switching off before opening the cover.**

The following requirements must be met:

- All connected cables must be disconnected.
- The Panel PC must no longer be installed on the VESA or swing arm system.

1. To uninstall the IP54 VESA mounting unit, perform the installation in reverse order (see "Installing the IP54 VESA mounting unit" on page 183).

5.1.13 Installing the USB hub

1. Disconnect the power supply cable to the Panel PC (disconnect the power cable!). Disconnect from all sources and poles!
2. Carry out electrostatic discharge at the ground connection.
3. Remove the mounting unit cover, see "Removing the mounting unit cover" on page 170.
4. Disconnect all connected cables.
5. Disconnect the Panel PC from the swing arm system by following the steps provided in section "Panel PC 2100 - Installation" on page 168 in reverse order.
6. Place the Panel PC on a clean, flat surface.
7. Place the USB hub on the panel. The screw openings on the hub must be lined up with the openings on the panel.

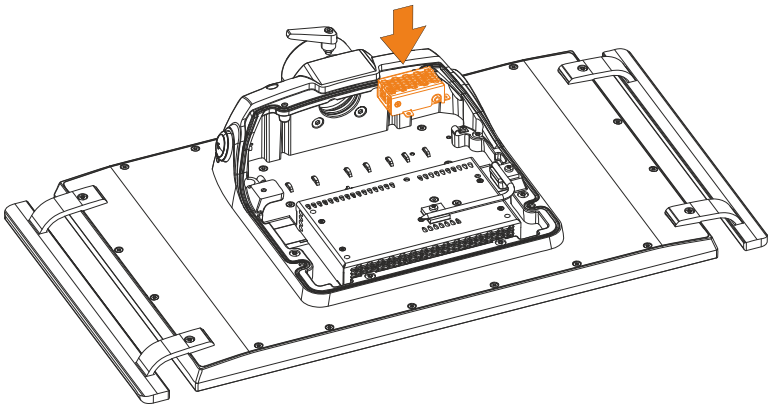

8. Install the USB hub on the panel using the 2 Torx screws (T10) indicated in the following figure. The tightening torque is 0.55 Nm for each. Connect the upstream cable from the hub to an available USB port on the system unit.

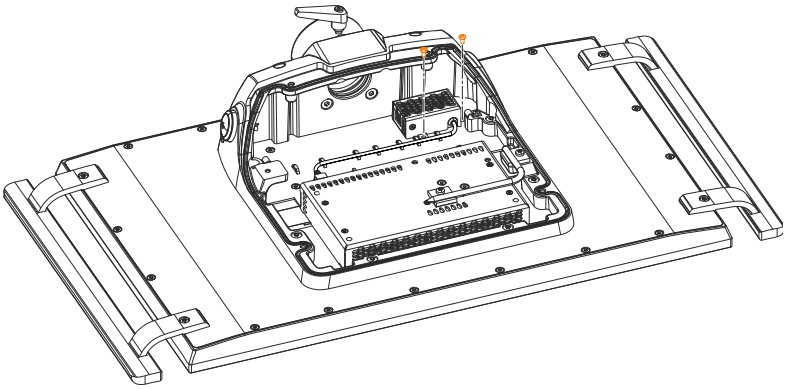

9. The USB hub can be removed by following these steps in reverse order. The max. tightening torque of the Torx screws (T10) is 0.55 Nm.
10. Replace the mounting unit cover with the 4 Torx screws (T25) removed earlier (tightening torque of the M5x12 screws: 3.5 Nm, for the M5x40 screws: 9.75 Nm). The mounting unit cover must be installed correctly to ensure IP65 protection.

5.1.14 Installing the handles

The following requirements must be met:

- All connected cables must be disconnected.
- The Panel PC must no longer be installed on the VESA or swing arm system.

1. Disconnect the power supply cable to the Panel PC (disconnect the power cable!). Disconnect from all sources and poles!
2. Carry out electrostatic discharge at the ground connection.
3. Place the Panel PC on a clean, flat surface.
4. Remove the top and bottom Torx screws (T20) on the side of the panel.

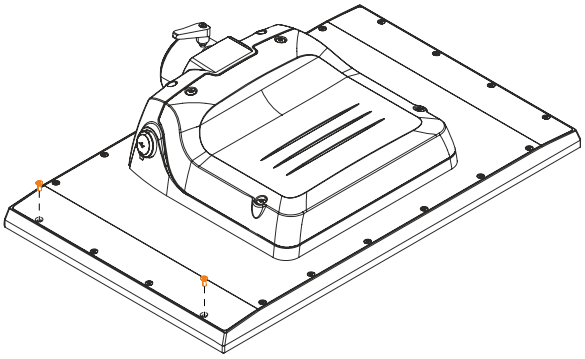

5. Insert the provided Torx screws (T20) through the handle and tighten with max. tightening torque of 1.24 Nm.

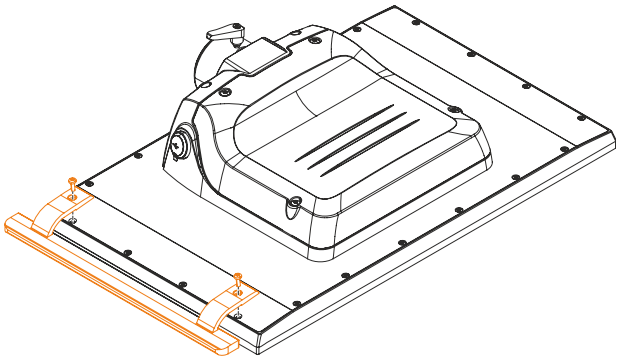

5.1.15 Removing the expansion unit/cover

The following requirements must be met:

- All connected cables must be disconnected.
- The Panel PC must no longer be installed on the VESA or swing arm system.

1. Disconnect the power supply cable to the Panel PC (disconnect the power cable!). Disconnect from all sources and poles!
2. Carry out electrostatic discharge at the ground connection.
3. Place the Panel PC on a clean, flat surface.
4. Remove the back cover of the panel by removing the 14 Torx screws (T20).

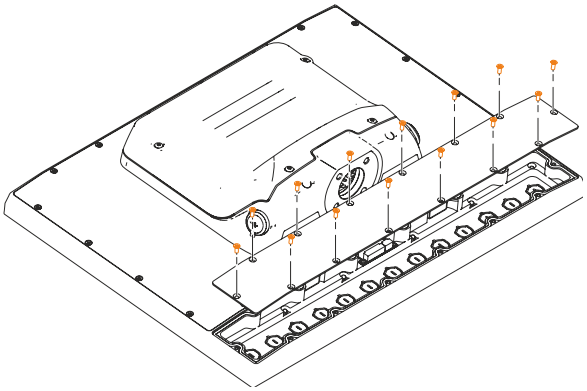

5. If an expansion unit is installed, the cables for the circuit board and front USB interface must be disconnected from the panel's circuit board.

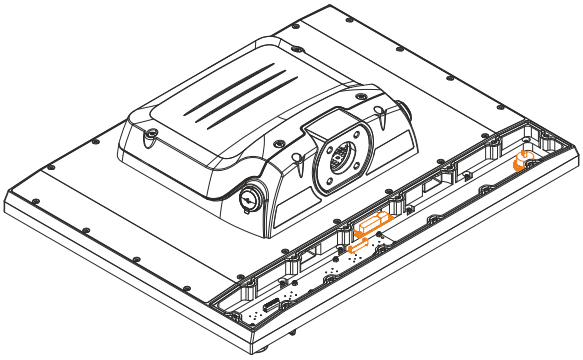

6. Remove the 12 nuts (M3) indicated in the following figure and remove the expansion unit / expansion cover from the panel.

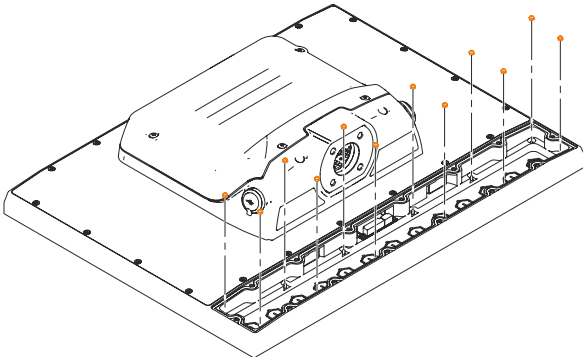

Information about leak tightness

> **Warning!**
>
> **Failure to follow instructions can result in damage to property.**

- The gasket must be inspected before installation or reinstallation and at regular intervals according to the requirements of the operating environment.
- Replace the entire device if inspection reveals visible scratches, cracks, dirt deposits or excessive wear.

- Do not stretch the gasket unnecessarily.
- It is important to ensure that the gasket is correctly seated all around.
- The housing components must be secured using the specified tightening torque.

5.1.16 Installing the expansion unit/cover

The following requirements must be met:

- All connected cables must be disconnected.
- The Panel PC must no longer be installed on the VESA or swing arm system.

1. Disconnect the power supply cable to the Panel PC (disconnect the power cable!). Disconnect from all sources and poles!
2. Carry out electrostatic discharge at the ground connection.
3. Place the Panel PC on a clean, flat surface.
4. Insert the front of the expansion unit / expansion cover into the panel. Secure to the back with the 12 nuts (M3). The tightening torque for each is 0.55 Nm.
5. Connect the cables for the circuit board and front USB interface to the terminal strips on the panel's circuit board.

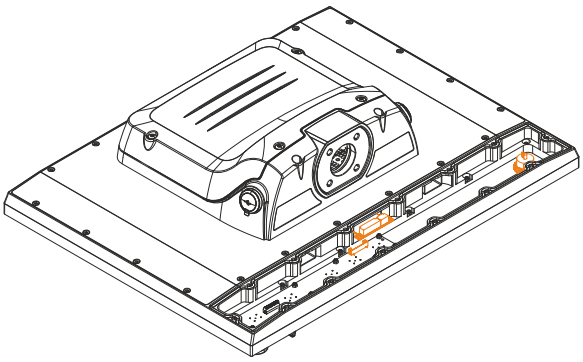

Wiring the expansion unit			
5ACCKP01.185B-000	5ACCKP04.185B-000	5ACCKP03.185B-000	5ACCKP05.185B-000
Execution with one slot: 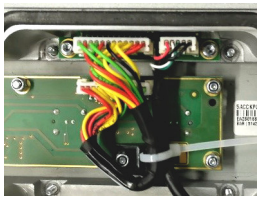		Execution with two slots: 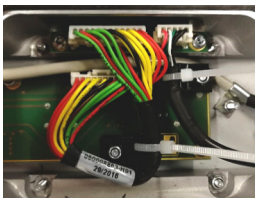	

> **Warning!**
>
> **It is important to ensure that cables and wires are not pinched.**

6. It is possible to lead any wiring or extensions to the outside through an installed flange via the cable ducts in the panel.

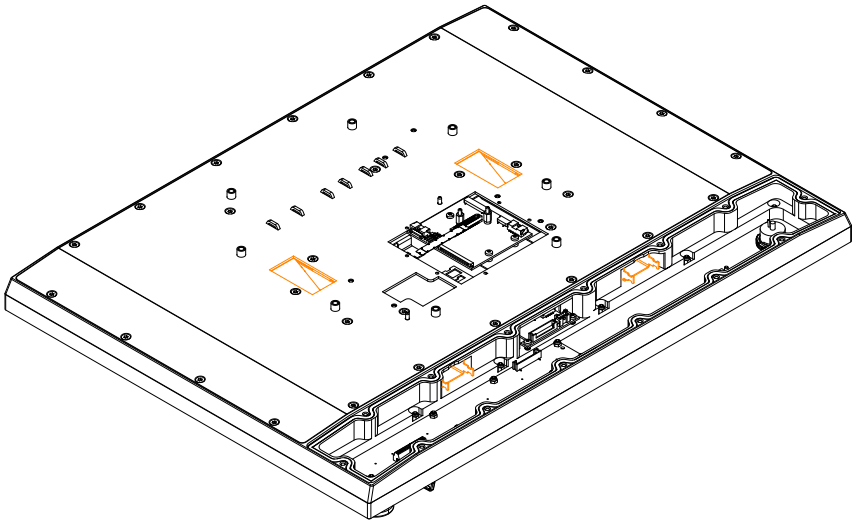

7. If required, wire the operating elements.

   For information about wiring operating elements on the expansion unit, see section "Button/Switch interface" on page 58.

   For information about wiring or installing operating elements on the expansion cover, see section "Installing operating elements on the expansion cover" on page 192.

8. Install the back cover with the 14 Torx screws (T20). The tightening torque for each is 2.3 Nm.

Information about leak tightness

Warning!

Failure to follow instructions can result in damage to property.

- The gasket must be inspected before installation or reinstallation and at regular intervals according to the requirements of the operating environment.
- Replace the entire device if inspection reveals visible scratches, cracks, dirt deposits or excessive wear.
- Do not stretch the gasket unnecessarily.
- It is important to ensure that the gasket is correctly seated all around.
- The housing components must be secured using the specified tightening torque.

5.1.17 Installing operating elements on the expansion cover

The following requirements must be met:

- All connected cables must be disconnected.
- The Panel PC must no longer be installed on the VESA or swing arm system.

B&R recommends the following operating elements for proper installation and operation:

- RAFIX 22 FS series
- RAFIX 22 FS+ series
- SHORTRON series

The corresponding manufacturer specifications must be observed when installing operating elements.

1. Disconnect the power supply cable to the device (disconnect the power cable!). Disconnect from all sources and poles!
2. Carry out electrostatic discharge at the ground connection.
3. Place the Panel PC on a clean, flat surface.
4. If an expansion unit is installed, it must first be removed. To do so, follow the instructions in section "Removing the expansion unit/cover" on page 188.
5. If an expansion cover is not installed, then one must be installed. To do so, follow the instructions in section "Installing the expansion unit/cover" on page 190.

> **Information:**
>
> **The following steps can only be performed after an expansion cover has been installed in the Automation Panel 5000.**

6. Cut through the panel overlay from the inside with a sharp object (e.g. scalpel) along the outer edges of the 3 curved cutout areas.

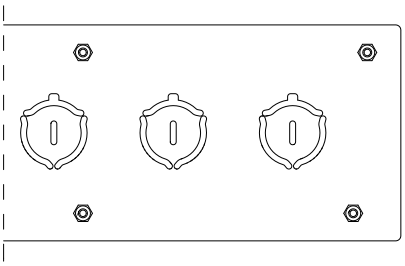

7. Carefully cut the panel overlay at the notch for the anti-twist lock.
8. Cut through the panel overlay along the outer edges of the middle cutout with a scalpel.
9. Push though the cutout for the operating element with a flat-blade screwdriver.

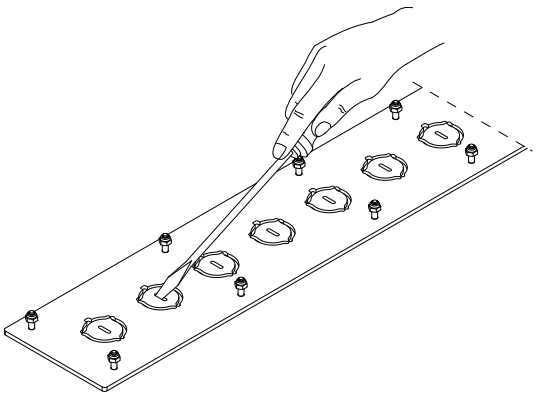

10. Cut the panel overlay so that it is flush with the edge of the steel plate.
11. Operating elements can now be installed on the expansion cover.

For more information about operating and switching elements, see section "Features" on page 295.

5.1.18 Replacing colored lenses

1. Place the colored lens on the operating element. Press the notches on the colored lens into the 4 large openings of the pushbutton.
2. If required, the colored lens can be removed using a sharp object.

Refer to the manufacturer guidelines for additional information about installing operating elements.

5.2 Connecting to the power grid

Danger!

- **The entire power supply must be disconnected and electrostatic discharge must take place on the housing or ground connection before removing any covers or components from the device and installing or removing any accessories, hardware or cables.**
- **Remove the power cable from the device and from the power supply.**
- **All covers and components, accessories, hardware and cables must be installed or secured before the device is connected to the power supply and switched on.**

5.2.1 Installing the DC power cable

Danger!

The entire power supply to the B&R industrial PC or B&R Automation Panel must be interrupted. Before connecting the DC power cable, it must be checked whether it has been disconnected from the voltage source (e.g. power supply unit).

5.2.1.1 Wiring

Caution!

The pinout of the power supply interface must be observed!

The DC power cable must be implemented with a wire cross section of 0.75 mm² to 1.5 mm² and wire end sleeves.

Conductors of the power cable	Terminal connection symbol
+24 VDC	+
GND	⏚
0 VDC	-

Installing screw clamp terminal block 0TB103.9

Secure the conductors with wire end sleeves ① in the terminal contacts ③ as shown in the figure below and tighten the screw clamp terminals ④ with a screwdriver (max. tightening torque 0.4 Nm). It is important to pay attention to the label on the spring clamp terminal ②.

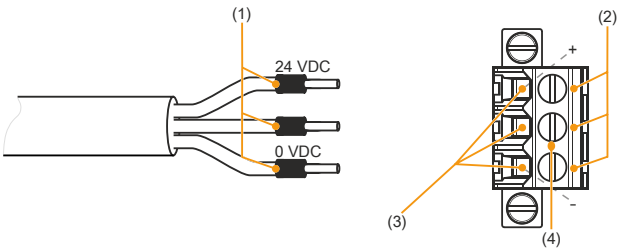

Installing cage clamp terminal block 0TB103.91

Insert a screwdriver into the cage clamp terminals ③ and secure the conductors with wire end sleeves ① in the terminal contacts ② as shown in the figure below. Close the terminal contact by removing the screwdriver. It is important to pay attention to the label on the spring clamp terminal ④.

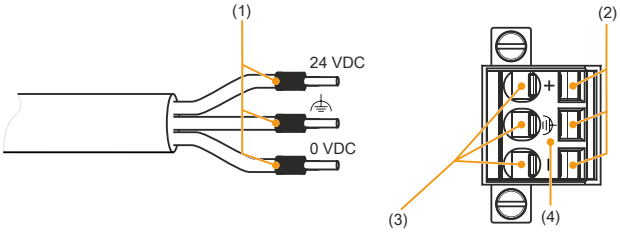

5.2.2 Connecting the power supply to a B&R device

Danger!

The entire power supply to the B&R device must be interrupted. Before connecting the power cable, it must be checked whether it has been disconnected from the voltage source (e.g. power supply unit).

1. Carry out electrostatic discharge on the housing or at the ground connection.
2. Connect the power supply connector to the B&R device and tighten the mounting screws (max. tightening torque 0.5 Nm).

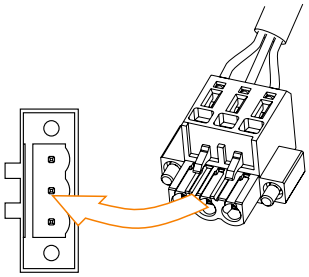

5.2.3 Grounding concept - Functional ground

Functional ground is a current path of low impedance between circuits and ground. It is used to improve immunity to interference, for example, and not as a protective measure. It serves only to divert interference, not to protect against contact with persons.

The device is equipped with the following functional ground connections:

- Functional ground connection of the power supply
- Ground connection

The following points must be observed to ensure that electrical interference is safely diverted:

- Connect the device to the central grounding point (e.g. the control cabinet or the system) using the shortest possible low-resistance path.
- Cable design with at least 2.5 mm² per connection. If a cable with wire end sleeve is used at terminal block 0TB103.9 or 0TB103.91, a cable with a maximum of 1.5 mm² per connection is possible.
- Observe the shielding concept of the conductors. All data cables connected to the device must be shielded.

The functional ground on the B&R device is marked with the following symbol: ⏚

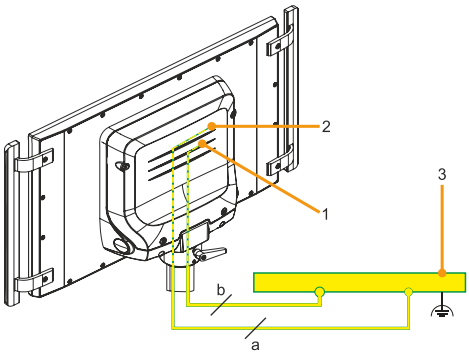

Legend					
1	Ground connection ⏚	2	Power supply connection +24 VDC pin 2	3	Central grounding point
a	At least 1.5 mm²	b	At least 2.5 mm²	-	

Legend			
1	Ground connection ⏚	2	Central grounding point
a	At least 2.5 mm²	-	

5.3 Connecting cables

When connecting or installing cables, the bend radius specification must be observed. For this specification, see the technical data of the respective cable.
The maximum tightening torque of the locating screws is 0.5 Nm.

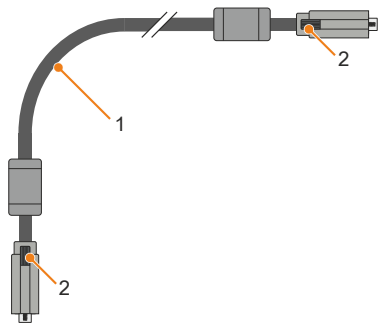

1) Bend radius
2) Locating screws

6 Commissioning

6.1 Basic information

Before the device is started up, it must be gradually adapted to room temperature!

6.2 Switching on the device for the first time

6.2.1 General information before switching on the device

Checklist

Before the device is started up for the first time, the following points must be checked:

- Have the installation instructions been observed as described in "Installation and wiring" on page 166?
- Have the permissible ambient conditions and environmental conditions for the device been taken into account?
- Is the power supply connected correctly and have the values been checked?
- Is the ground cable correctly connected to the ground connection?
- Before installing additional hardware, the device must have been started up.

Caution!

Before the device is started up, it must be gradually adapted to room temperature! Exposure to direct heat radiation is not permitted.

When transporting at low temperatures or in the event of large temperature fluctuations, the collection of moisture in or on the device is not permitted.

Moisture can cause short circuits in electrical circuits and damage the device.

Requirements

The following criteria must be met before switching on the device for the first time:

- The functional ground connections are as short as possible and connected to the central grounding point using the largest possible wire cross section.
- All connection cables are connected correctly.
- A USB keyboard and USB mouse are connected (optional).

6.2.2 Switching on the device

Procedure

1. Remove the mounting unit cover, see "Removing the mounting unit cover" on page 170.
2. Connect all necessary cables.
3. Connect the power supply and switch it on.
4. The device is operating and boots; LED "Power" lights up.
5. Replace the mounting unit cover with the 4 Torx screws removed earlier (tightening torque of the M5x12 screws: 3.5 Nm, for the M5x40 screws: 9.75 Nm). The cover must be installed correctly to ensure IP65 protection.

6.3 Touch screen calibration

B&R touch screen devices are equipped with a B&R touch controller that supports hardware calibration. These devices come already pre-calibrated from the factory. This feature offers great advantages especially for replacement parts since recalibration is usually no longer required when replacing a device (identical model/type). B&R still recommends recalibration for best results and to optimally adapt the touch screen to the needs of the user.

6.3.1 Single-touch (analog resistive)

6.3.1.1 Windows 10 IoT Enterprise 2016 LTSB

After starting Windows 10 IoT Enterprise 2016 LTSB on a Panel PC for the first time, the appropriate touch screen driver is installed automatically.

On all other devices, the touch screen driver must be subsequently installed to operate the touch screen. The appropriate driver is available for download in the Downloads section of the B&R website (www.br-automation.com).

6.3.1.2 Windows 10 IoT Enterprise 2015 LTSB

After starting Windows 10 IoT Enterprise 2015 LTSB on a Panel PC for the first time, the appropriate touch screen driver is installed automatically.

On all other devices, the touch screen driver must be subsequently installed to operate the touch screen. The appropriate driver is available for download in the Downloads section of the B&R website (www.br-automation.com).

6.3.1.3 Windows Embedded 8.1 Industry Pro

After starting Windows Embedded 8.1 Industry Pro on the Panel PC for the first time, the corresponding touch screen driver is installed automatically.

On all other devices, the touch screen driver must be subsequently installed to operate the touch screen. The appropriate driver is available for download in the Downloads section of the B&R website (www.br-automation.com).

6.3.1.4 Windows 7 Professional / Ultimate

After installing Windows 7 on the device, the touch screen driver must be installed in order to operate the touch screen. The appropriate driver is available for download in the Downloads section of the B&R website (www.br-automation.com).

6.3.1.5 Windows Embedded Standard 7 Embedded / Premium

A touch screen driver will be installed automatically if a touch controller is detected during the Windows Embedded Standard 7 installation.

The touch screen driver must be installed manually if a touch controller was not detected when installing Windows Embedded Standard 7 or if an Automation Panel has been connected after installation. The appropriate driver is available for download in the Downloads section of the B&R website (www.br-automation.com).

6.3.2 Multi-touch (projected capacitive - PCT)

6.3.2.1 Windows 10 IoT Enterprise 2016 LTSB

Microsoft multi-touch drivers are installed on the device during installation of Windows 10 IoT Enterprise 2016 LTSB. After successful installation of Windows 10 IoT Enterprise 2016 LTSB, the device is immediately ready for operation.

6.3.2.2 Windows 10 IoT Enterprise 2015 LTSB

Microsoft multi-touch drivers are installed on the device during installation of Windows 10 IoT Enterprise 2015 LTSB. After successful installation of Windows 10 IoT Enterprise 2015 LTSB, the device is immediately ready for operation.

6.3.2.3 Windows Embedded 8.1 Industry Pro

Microsoft multi-touch drivers are installed on the device during installation of Windows Embedded 8.1 Industry Pro. After successful installation of Windows Embedded 8.1 Industry Pro, the device is immediately ready for operation.

6.3.2.4 Windows 7 Professional / Ultimate

Microsoft multi-touch drivers are installed on the device during installation of Windows 7. After successful installation of Windows 7, the device is immediately ready for operation.

6.3.2.5 Windows Embedded Standard 7 Premium

Microsoft multi-touch drivers are installed on the device during installation of Windows Embedded Standard 7 Premium. After successful installation of Windows Embedded Standard 7 Premium, the device is immediately ready for operation.

6.4 Display brightness control

1. Open the ADI Control Center in the Control Panel.
2. Select tab "Display".
3. Select a panel from the list. Only the local display (PP Link) and connected panels are displayed in the list.
4. Set the desired brightness using the slider (the figure is symbolic).

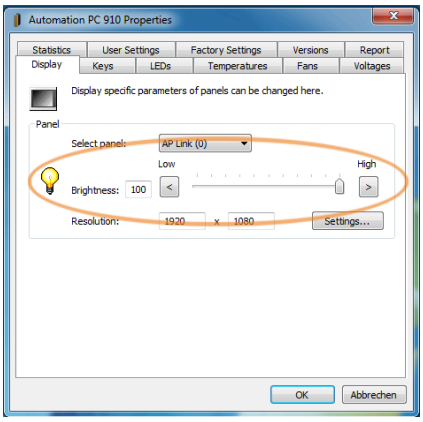

Figure 3: Adjusting the display brightness

Information:

The changed settings are displayed online but only applied by the system (and used after the next restart) if the ADI Control Center is exited with *OK*.

The configured brightness is independent of the value configured in BIOS Setup, i.e. the value set in BIOS is used until Windows boots. The value set in BIOS is only applied the first time the ADI Control Center is launched.

6.5 General instructions for the temperature test procedure

The purpose of these instructions is to explain the general procedure for application-specific temperature tests with B&R industrial PCs or Power Panels. These instructions are only guidelines, however.

6.5.1 Procedure

In order to obtain meaningful results, the test conditions should correspond to conditions in the field. This means that during the temperature tests, for example, the target application should be running and the PC should be installed in the control cabinet housing that will be used later.

In addition, a temperature sensor should be installed for the device being tested in order to continuously monitor the ambient temperature. To obtain correct values, it must be installed at a distance of approx. 5 to 10 cm from the B&R industrial PC near the air inlet (not near the air outlet).

Every B&R industrial PC or Power Panel is equipped with internal temperature sensors. Depending on the device family, these are installed in different positions. The number and temperature limits vary depending on the device family.

For position specifications of the temperature sensors and their maximum specified temperatures, see section "Temperature sensor positions" on page 43.

A minimum test time of 8 hours is recommended for to optimally determine and assess the temperature situation.

6.5.2 Evaluating temperatures in Windows operating systems

6.5.2.1 Evaluating with the B&R Control Center

The *ADI Control Center* can be used to evaluate temperatures. The temperatures can be viewed in tab **Temperatures**. The ADI Control Center can be downloaded from the B&R website (www.br-automation.com) at no cost and uses the ADI (Automation Device Interface).

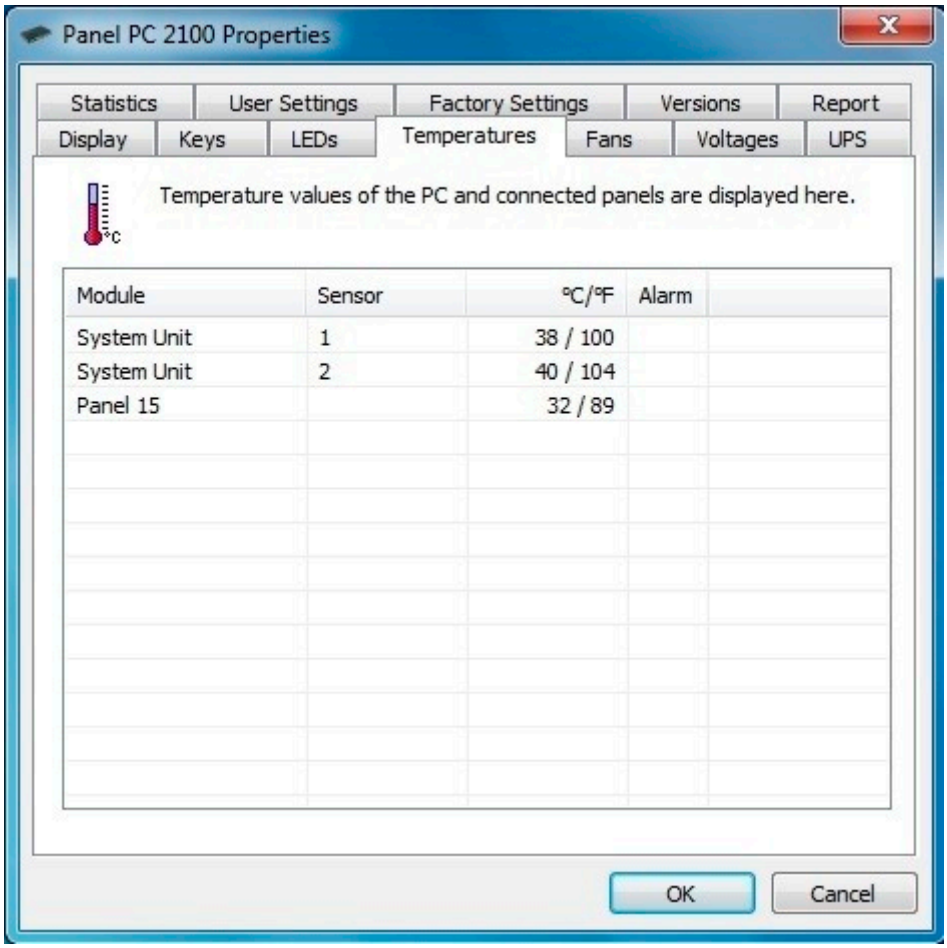

If historical recording of the data is necessary, a separate application can be created.

Information:

To create a separate application, downloads such as the ADI .NET SDK available from the B&R website (www.br-automation.com).

6.5.2.2 Evaluating with the BurnInTest tool from PassMark

If a separate application is not created or used for temperature evaluation, B&R recommends using the BurnInTest software tool from PassMark.

The BurnInTest software tool is available in standard and professional versions. In addition to the software package, various loopback adapters (serial, parallel, USB, etc.) and test CDs or DVDs are also available. Depending on the expansion level of the software and available loopback adapters, a correspondingly high system and peripheral load can be generated.

Information:

Loopback adapters are also available from PassMark. For additional information, see www.passmark.com.

The following screenshots refer to PassMark BurnInTest Pro V7.1 using a PPC2100 without IF options.

Overview of settings:

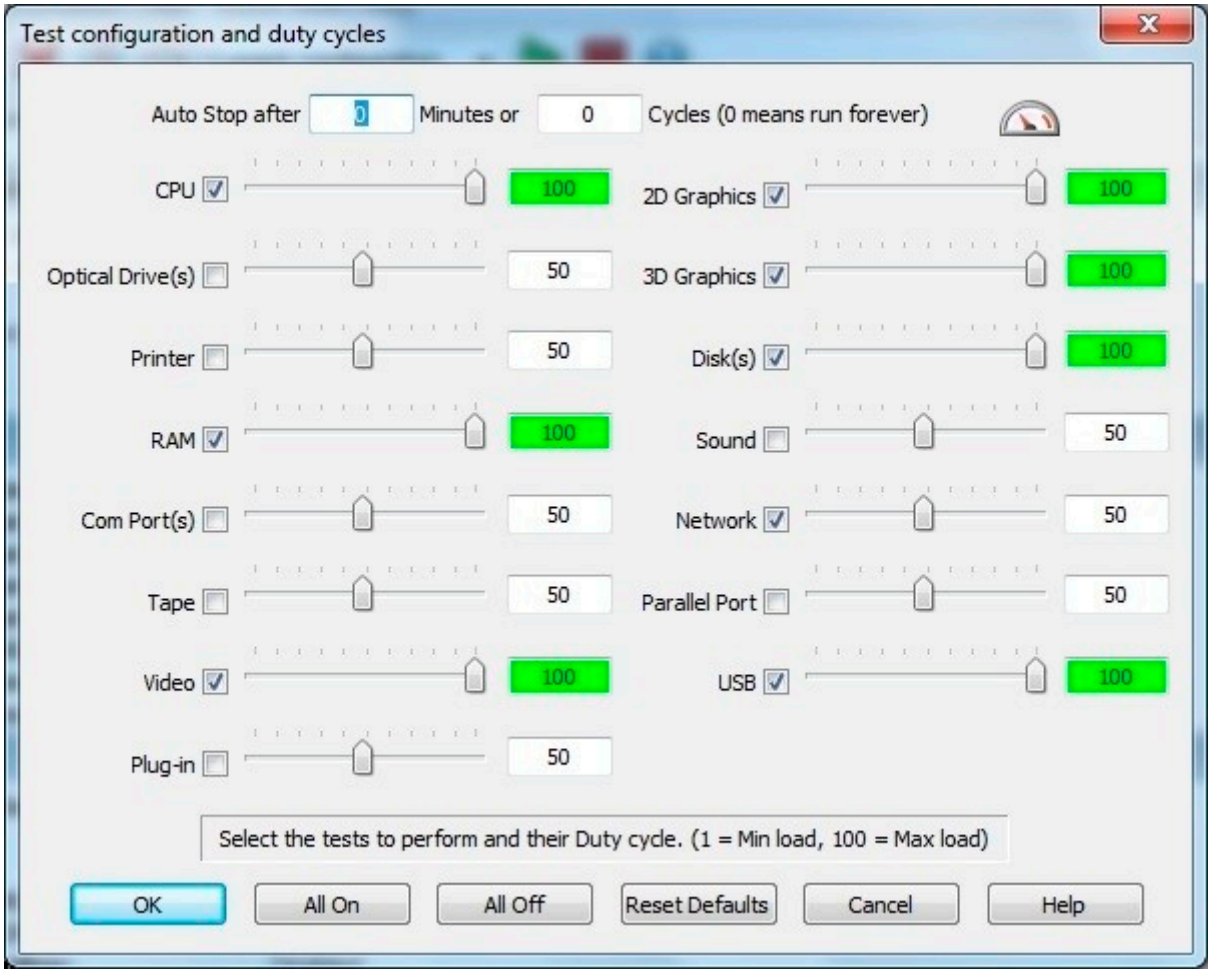

Test overview:

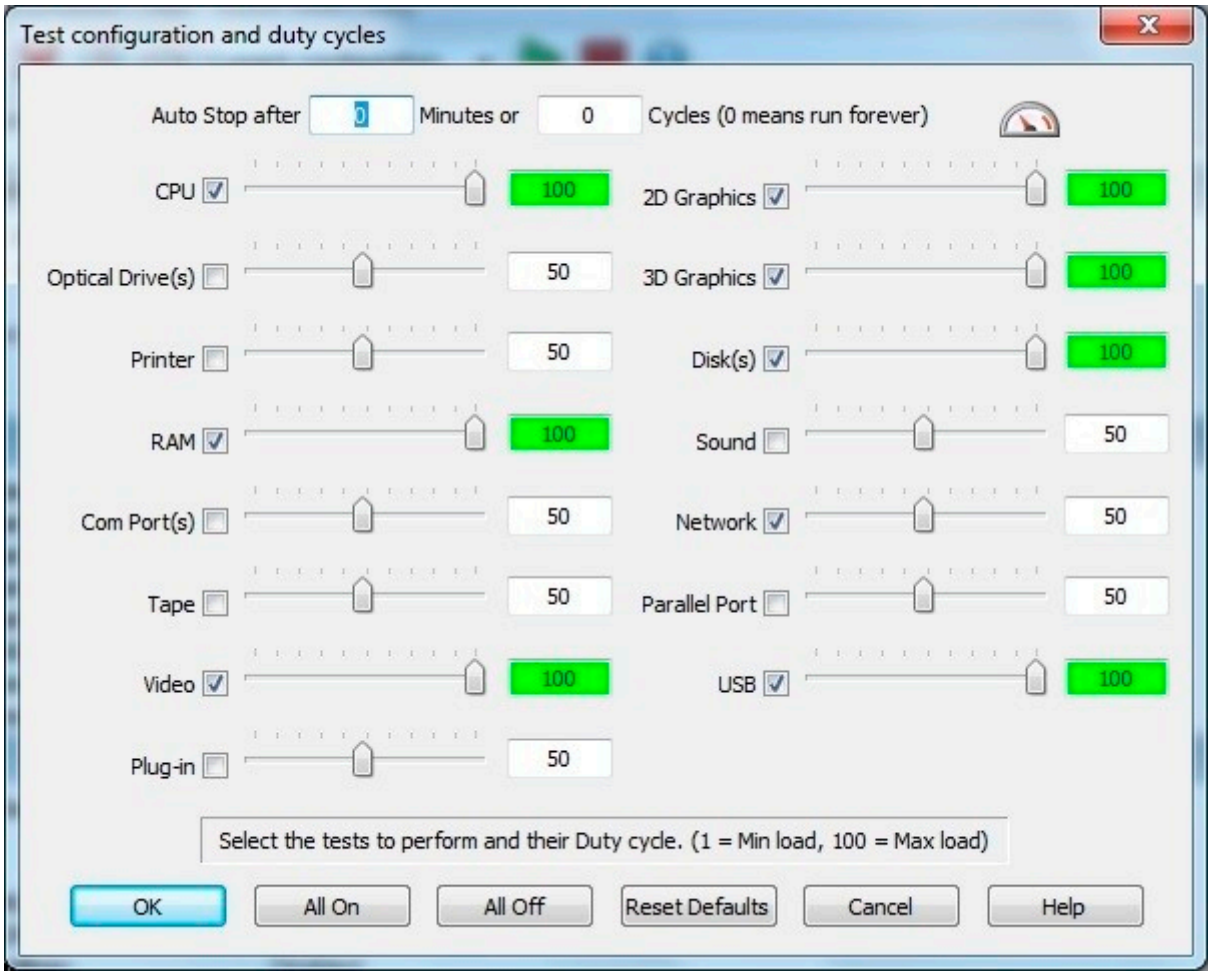

Depending on the availability of the loopback adapters and DVDs, appropriate fine tuning must be carried out in the respective test properties.

If no USB loopback adapters are available, USB flash drives can also be used. These must be available in Windows as formatted drives. Option **USB** must be deselected under **Test selection and duty cycles**, and **Test this device** must then be selected in the **Disk** settings (**Configuration / Test Preferences / Disk**).

Figure 4: USB loopback adapters

Serial loopback adapters can be easily created by connecting some pins as shown.

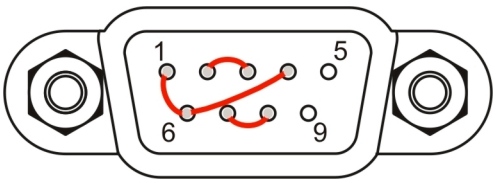

Figure 5: Serial loopback adapter

6.5.3 Evaluating temperatures in other operating systems

Implementation instructions and sample program are available for evaluating in other operating systems. These can be used to create customized functionality.

Sample programs and implementation instructions can be downloaded at no cost directly from the Downloads section of the B&R website (www.br-automation.com).

6.5.4 Evaluating the measurement results

The recorded maximum temperature value of each individual sensor is not permitted to exceed the temperature limit specified in the user's manuals.

If the temperature tests cannot be carried out in a climate chamber, they can be carried out in an office environment, for example. It is necessary to record the ambient temperature, however. Based on experience gained at B&R, the measured temperature values can be extrapolated linearly to the ambient temperature for passive systems (systems without a fan kit). In order to also be able to extrapolate the temperature values for systems with a fan kit, the fans must be running. The speed, etc. must also be taken into account.

If the temperature tests are carried out in a controlled climate chamber with a fan, the devices to be tested are cooled by this fan and thus the measurement results are distorted. With passive devices, the measurement results are therefore unusable. In order to be able to carry out temperature tests in climate chambers with fans without distorting the measurement results, however, the fan of the climate chamber must be switched off and a correspondingly long lead time (several hours) must be observed.

6.6 Known problems / Characteristics

- This CAN IF option 5ACCIF01.ICAN-000 is supported with Windows 7 and later by PVI V4.2.5 or Windows CAN driver V3.0.
- If problems occur with the ETH1 or ETH2 interface (connection abort, slow data transfer, etc.), the Energy-Efficient Ethernet feature can be disabled in the driver as a possible solution.
- If USB 3.0 should be used, XHCI mode must be set in the "USB configuration" for the following operating systems:
    - Windows 10 or Windows 8.1 to "Enabled"
    - Windows 7 to "Smart auto"

  If XHCI mode is set to "Smart auto" in Windows 8.1 or Windows 10, then only USB 2.0 is supported. The default value for setting "XHCI mode" is "Smart auto".
- If problems occur during shutdown or rebooting in B&R Linux, disabling the USB 3.0 function is one possible solution. To do this, the XHCI controller must be set to "Disabled" in the BIOS USB configuration.
- To slightly improve the real-time behavior (jitter) of the Automation Runtime Windows (ARwin) or Automation Runtime Embedded (ARemb) with a graphics-intensive application, the BIOS setting *Advanced - Graphics (IGD) Configuration - IGD Turbo* can be set to *Disabled*. If the BIOS setting *Advanced - Graphics (IGD) Configuration - IGD Turbo* is set to *Disabled*, the graphics performance of the system is noticeably reduced.

7 Software

7.1 BIOS options

> **Information:**
>
> **The following figures, BIOS menu options and descriptions refer to BIOS version 1.43. It is therefore possible that these diagrams and BIOS descriptions will not correspond with the BIOS version actually installed. In addition, the BIOS menu options provided depend on the system configuration.**

7.1.1 General information

BIOS is the abbreviation for "Basic Input and Output System". It is the basic standardized connection between user and system (hardware). This B&R industrial PC uses BIOS from Phoenix.

The BIOS Setup Utility allows you to modify basic system configuration settings. These settings are stored in the CMOS and EEPROM (as backup).

CMOS data is nonvolatile and remains stored on the B&R industrial PC for a certain amount of time even when the power is switched off (no 24 VDC power supply). For more information, see the technical data of the system unit.

7.1.2 BIOS Setup and start procedure

BIOS is enabled immediately after switching on the power supply of the B&R industrial PC or pressing the power button. A check takes place as to whether the setup data from the EEPROM is "OK". If "OK", the data is transferred to the CMOS. If "not OK", the CMOS data is checked for validity. If the CMOS data is also invalid, an error message is output and the boot procedure can be resumed without problems by pressing the <F1> key. To prevent an error message from appearing on each restart, launch the BIOS Setup utility by pressing <F2> and resave the settings.

BIOS reads the system configuration information, checks the system and configures it through the power-on self-test (POST).

When these "preparations" are completed, BIOS searches the system for an operating system in the available data storage devices (hard disk drive, floppy disk drive, etc.). BIOS starts the operating system and transfers to it control over system operations.

To enter BIOS Setup, the "F2" key must be pressed after the USB controller has been initialized as soon as the following message appears on the monitor (during POST): "F2 = Setup"

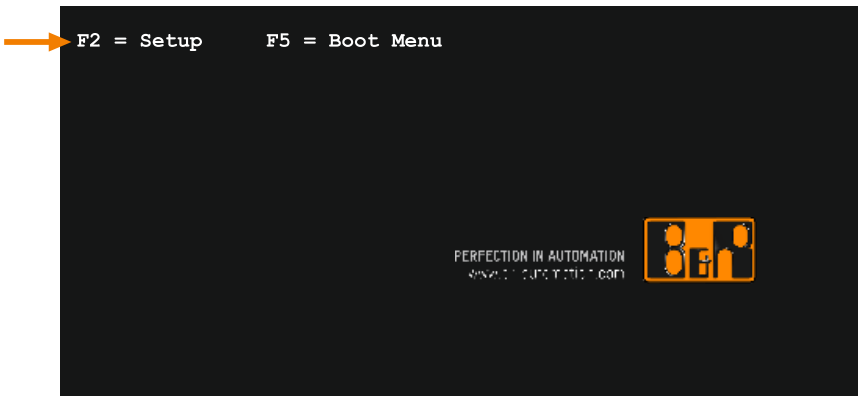

7.1.3 BIOS default settings

Setting options marked in bold represent the default value.

If function "Load setup defaults" is selected in the BIOS Setup main menu, or if "Exit" is selected (or F9 is pressed) in the individual setup screens, the default values are the optimized values that will be used.

7.1.4 BIOS Setup buttons

The following keys are enabled during POST:

> **Information:**
>
> **The key signals of the USB keyboard are only accepted after initializing the USB controller.**

Keys	Function
F2	Access to the BIOS Setup menu.
F5	Opens the boot menu. This lists all bootable devices that are connected to the system. Selecting a device with cursor ↑, cursor ↓ and then pressing <ENTER> will boot from that device. 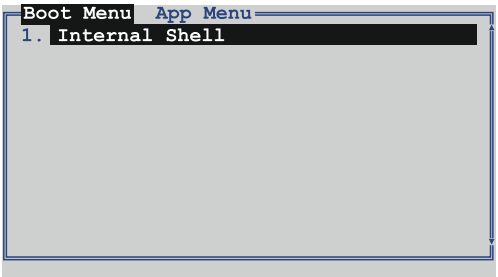
<Pause>	The POST can be stopped with the <Pause> button. After pressing any other key, the POST continues to run.

The following keys can be used after entering BIOS Setup:

Key	Function
F1	General help.
Cursor ↑	Go to previous object.
Cursor ↓	Go to next object.
Cursor ←	Go to previous object.
Cursor →	Go to next object.
+-	Changes the setting of the selected function.
Enter	Switches to the selected menu.
Page ↑	Jumps to the first BIOS menu option or object.
Page ↓	Jumps to the last BIOS menu option or object.
Home	Jumps to the first BIOS menu option or object.
End	Jumps to the last BIOS menu option or object.
F7	Resets the changes.
F9	Loads and sets CMOS default values for all BIOS settings.
F10	Saves and closes.
Esc	Exits the submenu.

7.1.5 Main

The BIOS Setup main menu appears immediately after the F2 button is pressed during system startup.

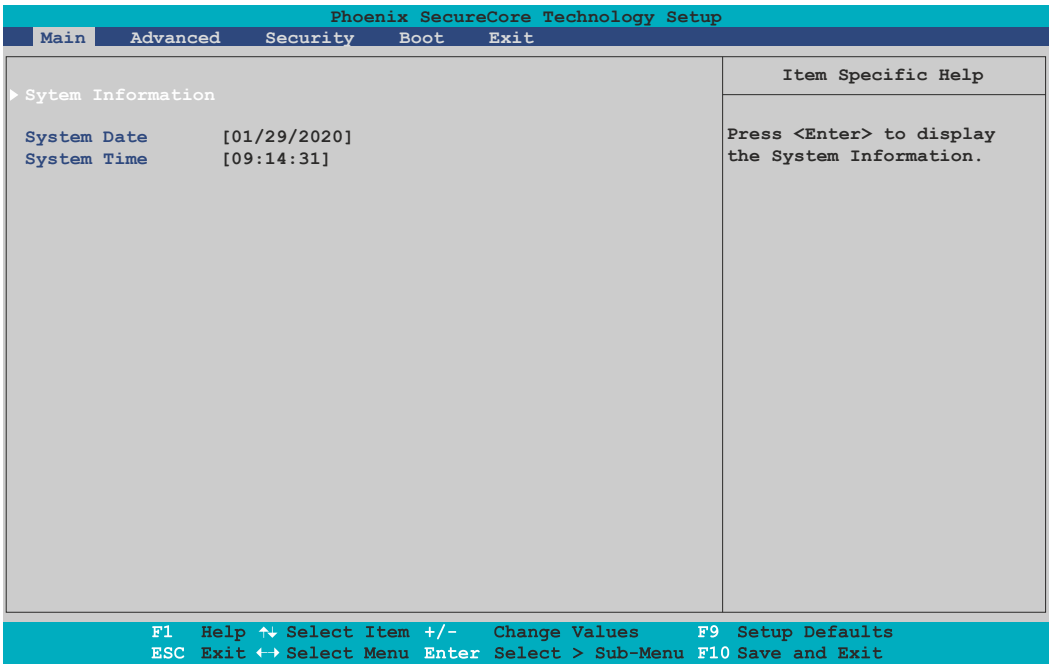

BIOS setting	Explanation	Configuration options	Effect
System information	Displays information about the chipset, CPU board and main memory.	Enter	Opens this submenu See "System information" on page 207.
System date	The currently configured system date. Buffered after the system is switched off. For details, see technical data of the system unit.	Change the system date	Sets the system date in the format Month:Day:Year (mm:dd:yyyy).
System time	The currently configured system time setting. Buffered after the system is switched off. For details, see technical data of the system unit.	Change the system time	Sets the system time in the format Hour:Minute:Second (hh:mm:ss).

7.1.5.1 System information

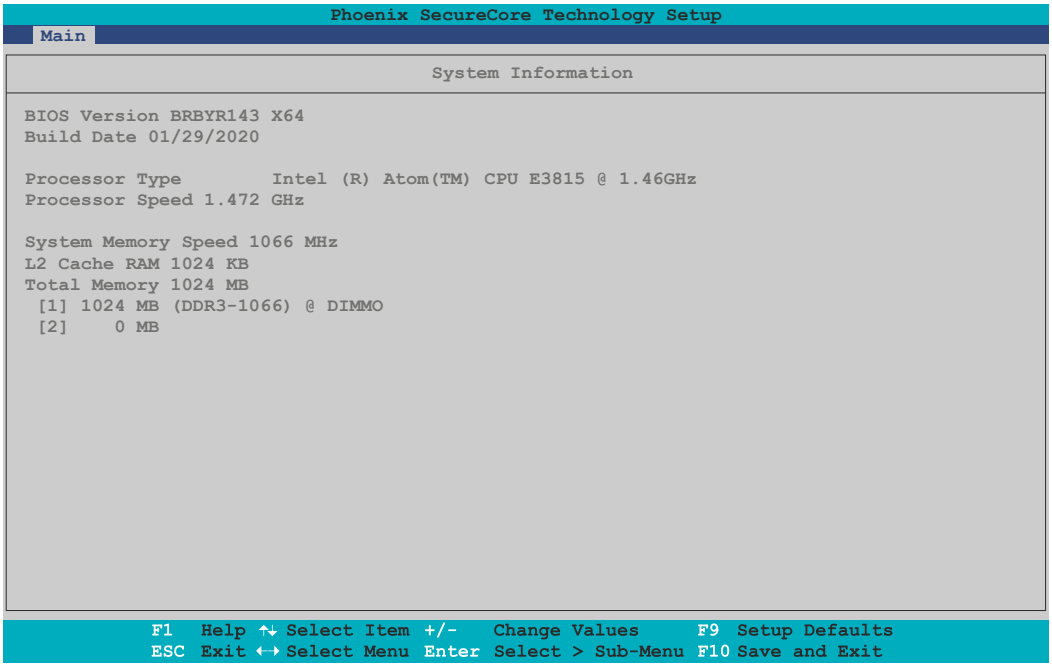

BIOS setting	Explanation	Configuration options	Effect
BIOS version	Displays the BIOS version.	None	-
Build time	Displays the date the BIOS was created.	None	-
Processor type	Displays the processor type.	None	-
Processor speed	Displays the processor frequency.	None	-
System memory speed	Displays the main memory frequency.	None	-

BIOS setting	Explanation	Configuration options	Effect
L2 cache RAM	Displays the L2 cache size.	None	-
Total memory	Displays the total main memory size.	None	-
[1]	Displays the main memory size in slot 1.	None	-
[2]	Displays the main memory size in slot 2.	None	-

7.1.6 Advanced

```
Phoenix SecureCore Technology Setup
Main   Advanced   Security   Boot   Exit

Setup Warning:                          Item Specific Help
Setting items on this screen to incorrect
values may cause system to malfunction!  Press <Enter> to select the
                                         OEM Features for deatail
▶ OEM Features                           system component
▶ CPU Configuration                      information and resource
▶ Graphics (IGD) Configuration           settings.
▶ LAN Configuration
▶ PCI Express Configuration
▶ USB Configuration
▶ SATA Configuration
▶ Miscellaneous Configuration
▶ Thermal Configuration

F1   Help ↑↓ Select Item +/-   Change Values      F9  Setup Defaults
ESC  Exit ←→ Select Menu Enter Select > Sub-Menu F10 Save and Exit
```

BIOS setting	Explanation	Configuration options	Effect
OEM features	Configures OEM features.	Enter	Opens this submenu See "OEM features" on page 210.
CPU configuration	Configures CPU settings.	Enter	Opens this submenu See "CPU configuration" on page 216.
Graphics (IGD) configuration	Configures the graphic settings.	Enter	Opens this submenu See "Graphics (IGD) configuration" on page 218.
LAN configuration	Configures LAN settings.	Enter	Opens this submenu See "LAN" on page 220.
PCI Express configuration	Configures PCI Express settings.	Enter	Opens this submenu See "PCI express configuration" on page 221.
USB configuration	Configures USB settings.	Enter	Opens this submenu See "USB configuration" on page 222.
SATA configuration	Configures SATA settings.	Enter	Opens this submenu See "SATA configuration" on page 223.
Miscellaneous configuration	Configures various settings.	Enter	Opens this submenu See "Miscellaneous configuration" on page 224.
Thermal configuration	Configures the temperature settings.	Enter	Opens this submenu See "Thermal configuration" on page 225.

7.1.6.1 OEM features

```
Phoenix SecureCore Technology Setup
Advanced

OEM Features                                   Item Specific Help

Version Information
Main BIOS Version                BRBYR143      Press <Enter> to select the
OEM BIOS Version                               Display Board Features for
MTCX FW Version                  1:13          detail system component
                                               information and resource
ETH1 MAC Address 00:E0:4B:4C:A5:27
ETH2 MAC Address 00:E0:4B:4C:A5:28

OEM String
Bernecker + Rainer Industrie-Elektronik T1.43

▶ Miscellaneous Configuration
▶ Super I/O Configuration
▶ System Board Features
▶ Display Board Features
▶ IF Board Features

F1   Help ↑↓ Select Item +/-   Change Values      F9  Setup Defaults
ESC  Exit ←→ Select Menu Enter Select > Sub-Menu F10 Save and Exit
```

BIOS setting	Explanation	Configuration options	Effect
Version information		None	-
Main BIOS version	Displays the installed B&R BIOS version.	None	-
OEM BIOS version		None	-
MTCX firmware version	Displays the installed MTCX version.	None	-
ETH1 MAC address	Displays the assigned MAC address for the ETH1 interface.	None	-
ETH2 MAC address	Displays the assigned MAC address for the ETH2 interface.	None	-
OEM string	Displays the OEM string.	None	-
Miscellaneous configuration	Configures various settings.	Enter	Opens this submenu See "Miscellaneous configuration" on page 211.
Super I/O configuration	Configures special settings for the interfaces.	Enter	Opens this submenu See "Super I/O configuration" on page 211.
System board features	Displays device-specific information for the system unit.	Enter	Opens this submenu See "System board features" on page 212.
Display board features	Displays device-specific information for the display.	Enter	Opens this submenu See "Display board features" on page 213.
IF board features	Displays device-specific information for the IF option.	Enter	Opens this submenu See "IF board features" on page 215.

7.1.6.1.1 Miscellaneous configuration

```
Phoenix SecureCore Technology Setup
Advanced

Miscellaneous Configuration                    Item Specific Help

After Power loss      [Power On]               Affects the following
Test Interface        [Disabled]               settings:

                                               DTS disabled
                                               P-States/C-States disabled
                                               Turbo Boost disabled
                                               RP 1 ASPM disabled.

                                               The respective setup items
                                               will be ignored

F1   Help ↑↓ Select Item  +/-   Change Values      F9  Setup Defaults
ESC  Exit ←→ Select Menu  Enter Select > Sub-Menu  F10 Save and Exit
```

BIOS setting	Explanation	Configuration options	Effect
After power loss	Option for setting the behavior after a power loss.	Stay off	The PC remains switched off during a power on.
		Power on	The PC is restarted during a power on.
Test interface		None	-

7.1.6.1.2 Super I/O configuration

```
Phoenix SecureCore Technology Setup
Advanced

Super I/O Configuration                        Item Specific Help

Serial Port A   [Default]                      Enable/Disable Serial Port.
Base Address    [ 3F8]                         Disabled: Disable Port.
IRQ             [4]                            Manual: Set Port values
                                               manual
Serial Port B   [Default]                      Default: Use system default
Base Address    [ 2F8]                         values.
IRQ             [3]

CAN             [Default]
Base Address    [ 384]
IRQ             [10]

F1   Help ↑↓ Select Item  +/-   Change Values      F9  Setup Defaults
ESC  Exit ←→ Select Menu  Enter Select > Sub-Menu  F10 Save and Exit
```

BIOS setting	Explanation	Configuration options	Effect
Serial port A	Setting for the COM interface of the IF option.	Disabled	Disables the interface.
		Manual	Manual settings for "Base address" and "IRQ" are possible.
		Default	Default settings are used.
Base address	Sets or displays the I/O address.	**3F8h**	Default setting
		Any	Any I/O address can be entered.
IRQ	Sets or displays the IRQ.	3, **4**, 5, 6, 7, 10, 11, 12, 14, 15	Manual assignment.
Serial port B	Setting for the onboard touch screen.	Disabled	Disables the interface.
		Manual	Manual settings for "Base address" and "IRQ" are possible.
		Default	Default settings are used.
Base address	Sets or displays the I/O address.	**2F8h**	Default setting
		Any	Any I/O address can be entered.

BIOS setting	Explanation	Configuration options	Effect
IRQ	Sets or displays the IRQ.	**3**, 4, 5, 6, 7, 10, 11, 12, 14, 15	Manual assignment.
CAN	Setting for the CAN interface of the IF option.	**Default**	Default settings are used. Further settings are not possible.
Base address	Displays the I/O address.	**384h/385h**	Fixed assignment. This setting cannot be changed.
IRQ	Displays IRQ.	**10**	Fixed assignment. This setting cannot be changed.

7.1.6.1.3 System board features

BIOS setting	Explanation	Configuration options	Effect
Device ID	Displays the device ID of the system unit.	None	-
Compatibility ID	Displays the version of the device within the same B&R device ID. This ID is required for Automation Runtime.	None	-
Vendor ID	Displays the manufacturer ID.	None	-
Hardware revision	Displays the hardware revision of the system unit.	None	-
Serial number	Displays the B&R serial number.	None	-
Product name	Displays the B&R model number.	None	-
Parent device ID	Displays the manufacturer number.	None	-
Parent Compatibility ID	Displays the manufacturer ID.	None	-
User serial ID	Displays the user serial ID. This 8-digit hex value is freely available to the user (e.g. to allow the device to be uniquely identified) and can only be changed with the B&R Control Center provided by B&R via the ADI driver.	None	-
Statistical values	Displays the statistical values.	Enter	Opens this submenu See "Statistical values" on page 212.
Temperature Values	Displays current temperature values.	Enter	Opens this submenu See "Temperature values" on page 213.

7.1.6.1.3.1 Statistical values

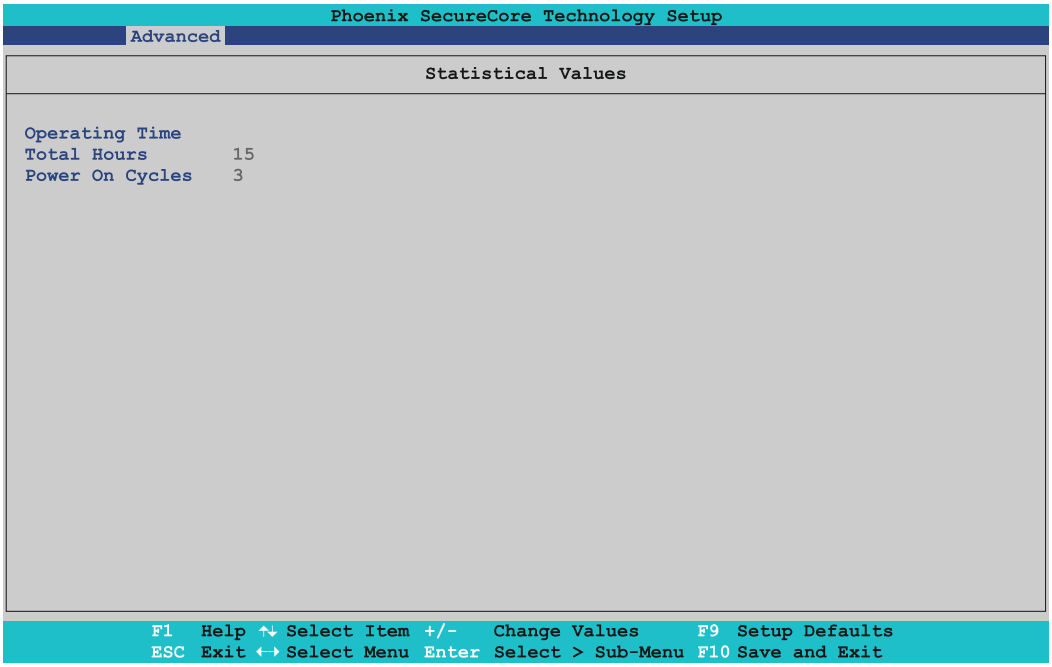

BIOS setting	Explanation	Configuration options	Effect
Total hours	Displays the runtime in hours.	None	-
Power on cycles	Displays the power on cycles - Each restart increases the counter by one.	None	-

7.1.6.1.3.2 Temperature values

```
Phoenix SecureCore Technology Setup
Advanced

Temperature Values

Live Temperature Values

 Sensor 1                [+41.00°C / +105.80°F]
 Sensor 2                [+41.75°C / +107.15°F]

F1   Help ↑↓ Select Item +/-   Change Values      F9  Setup Defaults
ESC  Exit ←→ Select Menu Enter Select > Sub-Menu  F10 Save and Exit
```

BIOS setting	Explanation	Configuration options	Effect
Sensor 1	Displays the current temperature of sensor 1 (system unit sensor 2) in °C and °F (sensor close to the RAM).	None	-
Sensor 2	Displays the current temperature of sensor 2 (system unit sensor 1) in °C and °F (sensor near the CPU).	None	-

7.1.6.1.4 Display board features

```
Phoenix SecureCore Technology Setup
Advanced

Display Board Features                    Item Specific Help

Device ID                 0000E1B0        Press <Enter> to select the
Compatibility ID          0000            Statistical Values Submenu
Vendor ID                 00000000        for detail information.
Hardware Revision         A0
Serial Number             E1B00168649
Product Name              5AP923.1215-00
Parent Device ID          FFFFFFFF
Parent Compatibility ID   FFFF

▶ Statistical Values
▶ Temperature Values

▶ Panel #15

F1   Help ↑↓ Select Item +/-   Change Values      F9  Setup Defaults
ESC  Exit ←→ Select Menu Enter Select > Sub-Menu  F10 Save and Exit
```

BIOS setting	Explanation	Configuration options	Effect
Device ID	Displays the device ID of the panel.	None	-
Compatibility ID	Displays the version of the device within the same B&R device ID. This ID is required for Automation Runtime.	None	-
Vendor ID	Displays the manufacturer ID.	None	-
Hardware revision	Displays the hardware revision of the panel.	None	-
Serial number	Displays the B&R serial number.	None	-
Product name	Displays the B&R model number.	None	-
Parent device ID	Displays the manufacturer number.	None	-

BIOS setting	Explanation	Configuration options	Effect
Parent Compatibility ID	Displays the manufacturer ID.	None	-
Statistical values	Displays the statistical values.	Enter	Opens this submenu See "Statistical values" on page 214.
Temperature Values	Displays current temperature values.	Enter	Opens this submenu See "Temperature values" on page 214.
Panel #15	Displays the panel properties of the panel.	Enter	Opens this submenu See "Panel #15" on page 215.

7.1.6.1.4.1 Statistical values

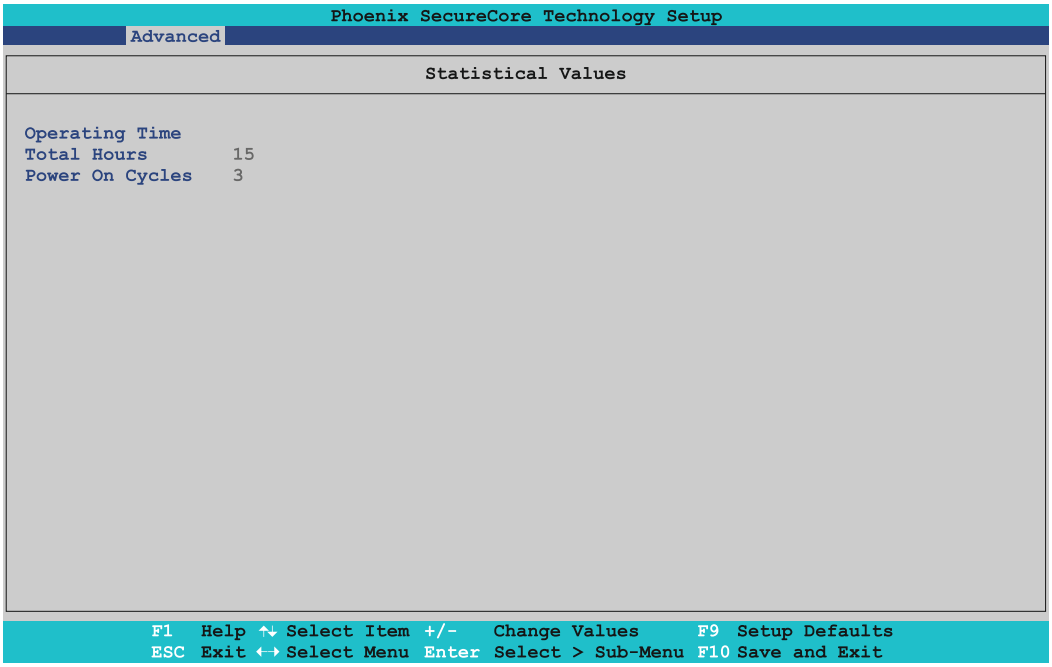

BIOS setting	Explanation	Configuration options	Effect
Total hours	Displays the runtime in hours.	None	-
Power on cycles	Displays the power on cycles - Each restart increases the counter by one.	None	-

7.1.6.1.4.2 Temperature values

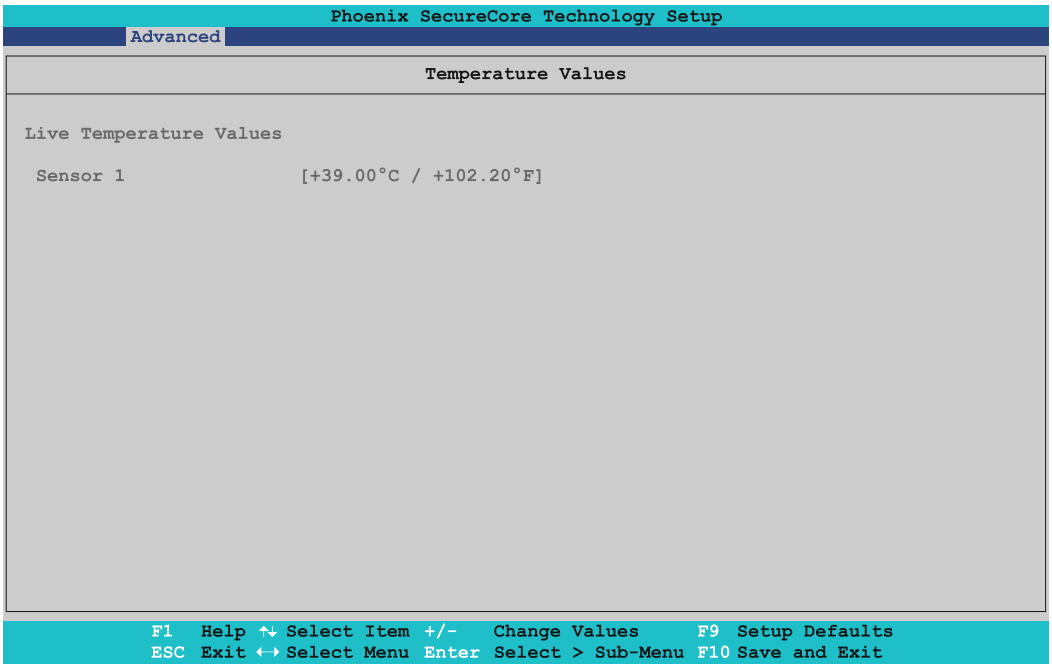

BIOS setting	Explanation	Configuration options	Effect
Sensor 1	Displays the current temperature of sensor 1 (display or panel) in °C and °F.	None	-

Table 82: Advanced - OEM features - Display board features - Temperature values

7.1.6.1.4.3 Panel #15

```
Phoenix SecureCore Technology Setup
Advanced

Panel #15                                   Item Specific Help

Version      V1.21                          Set brightness level.
Brightness   [100]
Fan Speed    [0 RPM]
Keys/LEDs    128/128
Temperature  [+36°C / +96°F]

F1   Help ↑↓ Select Item +/-   Change Values      F9  Setup Defaults
ESC  Exit ←→ Select Menu Enter Select > Sub-Menu F10 Save and Exit
```

BIOS setting	Explanation	Configuration options	Effect
Version	Displays the panel firmware version.	None	-
Brightness	Sets the display brightness.	0 to **100**	Sets the brightness of the selected panel in %. Settings take effect immediately.
Fan speed	Displays the fan speed of the panel.	None	-
Keys/LEDs	Displays the available keys and LEDs for the panel.	None	-
Temperature	Displays the temperature of the panel in °C and °F.	None	-

7.1.6.1.5 IF board features

```
Phoenix SecureCore Technology Setup
Advanced

IF Board Features                           Item Specific Help

Device ID                 0000E53F          Press <Enter> to select the
Compatibility ID          0000              Statistical Values Submenu
Vendor ID                 00000000          for detail information.
Hardware Revision         A0
Serial Number             E53F0168528
Product Name              5ACCIF01.FPSC-000
Parent Device ID          FFFFFFFF
Parent Compatibility ID   FFFF

▶ Statistical Values

F1   Help ↑↓ Select Item +/-   Change Values      F9  Setup Defaults
ESC  Exit ←→ Select Menu Enter Select > Sub-Menu F10 Save and Exit
```

BIOS setting	Explanation	Configuration options	Effect
Device ID	Displays the device ID of IF option.	None	-
Compatibility ID	Displays the version of the device within the same B&R device ID. This ID is required for Automation Runtime.	None	-
Vendor ID	Displays the manufacturer ID.	None	-
Hardware revision	Displays the hardware revision of the IF option.	None	-
Serial number	Displays the B&R serial number.	None	-

BIOS setting	Explanation	Configuration options	Effect
Product name	Displays the B&R model number.	None	-
Parent device ID	Displays the manufacturer number.	None	-
Parent Compatibility ID	Displays the manufacturer ID.	None	-
Statistical values	Displays the statistical values.	Enter	Opens this submenu See "Statistical values" on page 216.

7.1.6.1.5.1 Statistical values

```
Phoenix SecureCore Technology Setup
Advanced

Statistical Values

Operating Time
Total Hours        15
Power On Cycles    3

F1  Help ↑↓ Select Item +/-   Change Values      F9  Setup Defaults
ESC Exit ←→ Select Menu Enter Select > Sub-Menu  F10 Save and Exit
```

BIOS setting	Explanation	Configuration options	Effect
Total hours	Displays the runtime in hours.	None	-
Power on cycles	Displays the power on cycles - Each restart increases the counter by one.	None	-

7.1.6.2 CPU configuration

```
Phoenix SecureCore Technology Setup
Advanced

CPU Configuration                                   Item Specific Help

Note:
Some items in this menu are affected by the Realtime   Execute Disable Bit prevent
Environment setting. If Realtime Environment is enabled, they   certain classes of
will be grayed out and ignored.                         malicious buffer overflow
                                                        attacks when combined with
Execute Disable Bit                  [Enable]           a supporting OS
Limit CPUID Maximus                  [Disable]
Bi-directional PROCHOT#              [Enable]
VTX-2                                [Enable]
TM1                                  [Enable]
DTS                                  [Enable]
Intel® Hyper-Threading Technology    Not Supported

▶ CPU Power Management

F1  Help ↑↓ Select Item +/-   Change Values      F9  Setup Defaults
ESC Exit ←→ Select Menu Enter Select > Sub-Menu  F10 Save and Exit
```

BIOS setting	Explanation	Configuration options	Effect
Execute disable bit	Option for enabling/disabling hardware support for prevention of data execution.	Disabled	Disables this function.
		Enabled	Enables this function.
Limit CPUID maximum	Option for limiting the CPU ID value. This may be necessary for older operating systems that do not support CPUID functions.	**Disabled**	The processor returns the current maximum value when the CPU ID value is requested.
		Enabled	If necessary, the processor limits the maximum CPU ID value to 03h if the processor supports a higher value.

BIOS setting	Explanation	Configuration options	Effect
Bi-directional PROCHOT#[1)]	Option for enabling/disabling the PROCHOT signal. The PROCHOT signal initializes temperature throttling so that the CPU can be slowed down and protected against overheating.	Disabled	Disables this function. Only the processor cores can enable the PROCHOT signal and throttle the processor.
		Enabled	Enables this function. External services can enable the PROCHOT signal and choke the processor.
VTX-2	Option for enabling/disabling a virtual machine. **Information:** **A restart is required in order to apply changes made to this setting.**	Disabled	Disables this function.
		Enabled	If this function is enabled, a virtual machine can use the additional hardware capacity.
TM1	Option for setting the temperature monitoring.	Disabled	The temperature monitoring is disabled.
		Enabled	Intel thermal mode 1 is enabled. If the CPU temperature is too high, the processor speed is reduced by 50%.
DTS	Option for enabling/disabling the CPU digital thermal sensor function.	Disabled	Disables this function.
		Enabled	Enables this function.
Intel® Hyper-Threading Technology	Displays whether Intel® Hyper-Threading Technology is supported.	None	-
CPU power management	Configures CPU energy settings.	Enter	Opens this submenu See "CPU power management" on page 217.

1) PROCHOT = Processor Hot

7.1.6.2.1 CPU power management

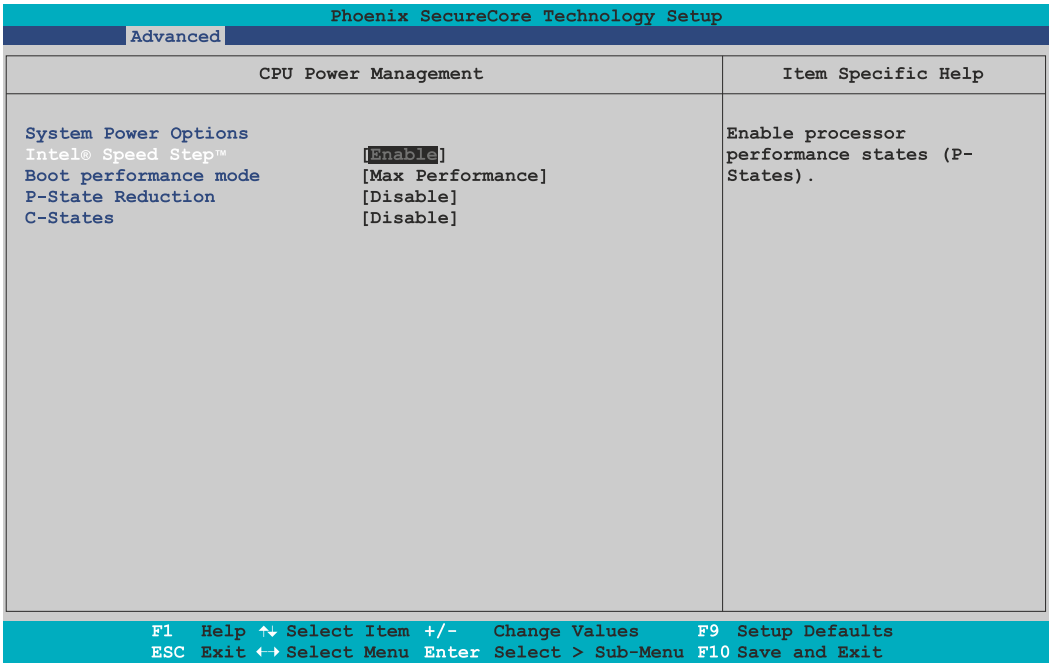

BIOS setting	Explanation	Configuration options	Effect
Intel® SpeedStep™	Option for controlling Intel® SpeedStep™ Technology. The processor is clocked up or down according to the number of calculations to be performed. As a result, the energy consumption depends heavily on the utilization of the processor.	Disabled	Disables this function.
		Enabled	The processor speed is controlled by the operating system.
Boot performance mode	Option for setting the CPU speed. **Information:** **This setting can be changed in ACPI operating systems by activating Intel® SpeedStep™ Technology.**	**Max performance**	Maximum CPU and graphics speed.
		Max battery	The CPU and graphics speed is choked.
P-state reduction	Option for reducing CPU performance and power usage.	**Disabled**	Disables this function.
		By 1, 2, 3, 4, 5, 6, 7, 8	Reduces the performance by the configured value depending on the CPU being used.

BIOS setting	Explanation	Configuration options	Effect
C-states	This setting allows the operating system to set the clock frequency of the processor itself. This saves energy.	**Disabled**	Disables this function.
		Enabled	Enables this function; additional settings can be made.
Max C states[1)]	This setting controls the maximum C state that the processor supports.	C7	Maximum C state C7. The CPU voltage is completely switched off.
		C6	Maximum C state C6. The CPU voltage is reduced to almost 0 V.
		C1	Maximum C state C1. The processor is in sleep mode. Switch between C0 and C1.

1) This setting is only possible if *C-states* is set to *Enabled*.

7.1.6.3 Graphics (IGD) configuration

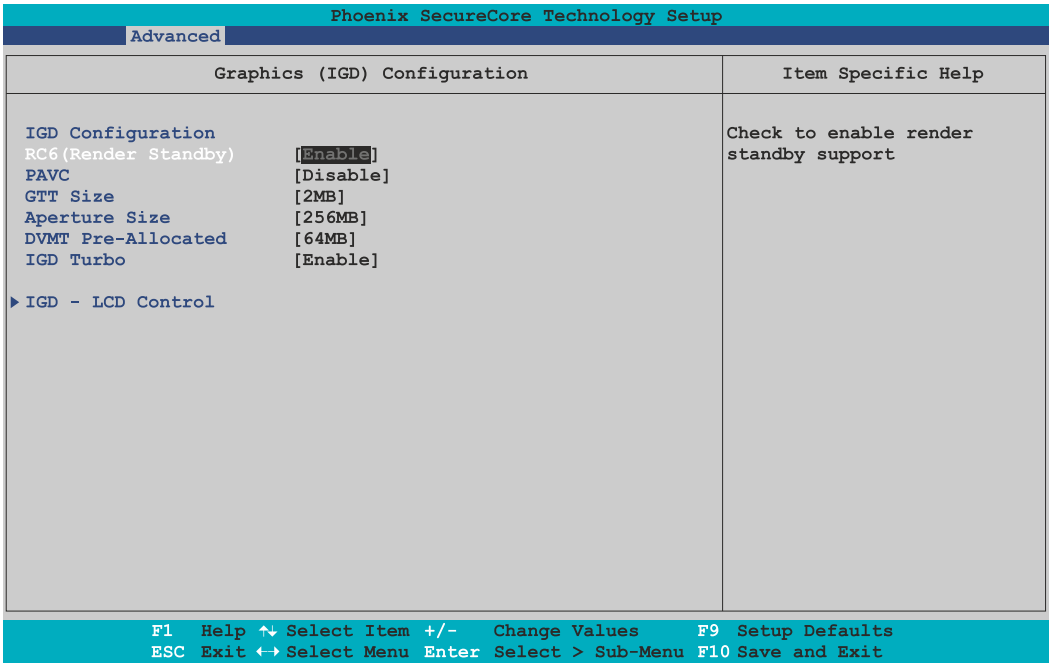

BIOS setting	Explanation	Configuration options	Effect
RC6 (render standby)	Option for enabling/disabling standby mode for the onboard graphics in order to consume less energy.	Disabled	Disables this function.
		Enabled	Enables this function.
PAVC	Protected Audio Video Control protects data on the PC.	**Disabled**	Disables this function.
		LITE mode	Reserves the memory.
		SERPENT mode	Reserves the memory; this is not recognized by the operating system.
GTT size	Option for setting the size of the graphics translation table (GTT).	1 MB	1 MB GTT
		2 MB	2 MB GTT
Aperture size	Option for setting the maximum amount of RAM made available to the main memory when graphics memory is full.	128 MB	Reserves 128 MB
		256 MB	Reserves 256 MB
		512 MB	Reserves 512 MB
DVMT pre-allocated	Option for setting the fixed memory size used for the internal graphics controller.	**64 M**, 96 M, 128 M, 160 M, 192 M, 224 M, 256 M, 288 M, 320 M, 352 M, 384 M, 416 M, 448 M, 480 M, 512 M	Defines the static graphics memory as a value between 64 and 512 MB.
IGD turbo	Option for setting the turbo boost on the graphics controller.	Disabled	Disables this function.
		Enabled	Enables this function.
IGD - LCD control		Enter	Opens this submenu See "IGD - LCD control" on page 219.

7.1.6.3.1 IGD - LCD control

```
Phoenix SecureCore Technology Setup
Advanced

IGD Configuration                                   Item Specific Help

IGD managed by:
Legacy Video BIOS [3798]                            Select the Video Device
                                                    activated during POST. This
LVDS EEPROM Data                                    has no effect if external
Data Format                 EPI                     graphics are present.
Resolution                  1024x768
Color Depth                 24Bit
Channel Count               Single Channel

IGD - Boot Type             [Auto]

LVDS Clock Center Spreading [No Spreading]

EFP1 Type                   [DP with HDMI/DVI]

Mode Persistance            [Disable]
Center Mode                 [Auto]

F1   Help ↑↓ Select Item +/-   Change Values     F9  Setup Defaults
ESC  Exit ←→ Select Menu Enter Select > Sub-Menu F10 Save and Exit
```

BIOS setting	Explanation	Configuration options	Effect
Data format	Displays the data format of the LFP[1].	None	-
Resolution	Displays the display resolution of the LFP.	None	-
Color depth	Displays the color depth of the LFP display.	None	-
Channel count	Displays LFP channels.	None	-
IGD - Boot type	Option for defining the primary enabled display device during POST.	**Auto**	Automatic selection.
		CRT	The CRT (cathode ray tube) channel is used.
		EFP	The EFP (external flat panel) channel is used.
		LFP	The LFP (local flat panel) channel is used.
IGD - Secondary boot type[2]	Option for defining the secondary enabled display device during POST. **Information:** **After the BIOS boot screen, this display and BIOS will no longer show anything until the graphics driver is reloaded by the operating system.**	Disabled	Disables this function.
		CRT	The CRT (cathode ray tube) channel is used.
		EFP	The EFP (external flat panel) channel is used.
		LFP	The LFP (local flat panel) channel is used.
LFP type[3]	Option for manually setting the LFP (local flat panel) type.	Auto	The LFP type is automatically set based on the EDID data.
		VGA 640 x 480 1x18 up to WUXGA 1920 x 1200 2 x 24	Manual adjustment of the resolution from 640 x 480 to 1920 x 1200.
LVDS clock center spreading	Option for modulating the LVDS clock frequency to slightly reduce electromagnetic interference.	**No spreading**	Disables this function.
		0.5%, 1.0%, 1.5%, 2.0%, 2.5%	The LVDS clock frequency varies around the set value and the EMC behavior can be improved.
EFP1 type[4]	Option for setting the type for external flat panel 1.	DisplayPort only	Configures the interface as a DisplayPort interface.
		DP with HDMI/DVI	The interface is configured as a DisplayPort with HDMI/DVI.
		HDMI/DVI	Configures the interface as an HDMI/DVI.
Mode "Persistence"	Mode "Persistence" means that the operating system can remember and restore past display connection configurations. For example, a dual DVI display configuration is automatically restored when both DVI monitors are reconnected, even if only one DVI monitor was connected and activated during a previous boot procedure.	**Disabled**	Disables this function.
		Enabled	Enables this function.
Center mode	For panels without a scaler chip, the image is centered.	Disabled	Disables this function.
		Auto	Enables this function for all connected panels/monitors.
		CRT	Enables this function for CRT monitors.
		EFP	Enables this function for panels.

1) LFP = Local flat panel
2) This setting is only possible if *IGD - Boot type* is set to *CRT*, *EFP* or *LFP*.
3) This setting is only possible if *IGD - Boot type* is set to *LFP*.
4) This setting is only possible if *IGD - Boot type* is set to *Auto* or *EFP*.

7.1.6.4 LAN

```
Phoenix SecureCore Technology Setup
Advanced

LAN Configuration                          Item Specific Help

PXE ROM                  [Disabled]        Enable/Disable PCE Option
WakeOnLAN from S5        [Disabled]        ROM execution for onboard
                                           LAN
▶Network Stack

F1   Help ↑↓ Select Item +/-   Change Values      F9  Setup Defaults
ESC  Exit ←→ Select Menu Enter Select > Sub-Menu F10 Save and Exit
```

BIOS setting	Explanation	Configuration options	Effect
PXE ROM	Option for setting the PXE boot features.	**Disabled**	Disables this function.
		Onboard ETH1 only	Enables this function for ETH1.
		Onboard ETH2 only	Enables this function for ETH2.
		Both onboard only	Enables this function for ETH1 and ETH2.
		Add-on only	Enables this function for an optionally connected add-on card.
		Any	Enables this function for all devices, ETH1 and ETH2.
WakeOnLAN from S5	Option for switching on the system via the onboard Ethernet controller (ETH1) from mode S5.	Disabled	Disables this function. The Ethernet controller cannot switch on the system.
		Enabled	Enables this function. The Ethernet controller can switch on the system.
Network stack	Configures the network stack	Enter	Opens submenu "Network stack" on page 220

7.1.6.4.1 Network stack

```
Phoenix SecureCore Technology Setup
Advanced

Network Stack                              Item Specific Help

Network Stack            [Enabled]         Enable/Disable UEFI Network
IPv4                     [Enabled]         Stack
IPv6                     [Enabled]

F1   Help ↑↓ Select Item +/-   Change Values      F9  Setup Defaults
ESC  Exit ←→ Select Menu Enter Select > Sub-Menu F10 Save and Exit
```

BIOS setting	Explanation	Configuration options	Effect
Network stack	Option for enabling/disabling the UEFI network stack	**Disabled**	Disables this function.
		Enabled	Enables this function.
IPv4	Option for enabling/disabling IPv4 PXE support.	**Enabled**	Enables this function.
		Disabled	Disables this function.
IPv6	Option for enabling/disabling IPv6 PXE support.	**Enabled**	Enables this function.
		Disabled	Disables this function.

7.1.6.5 PCI express configuration

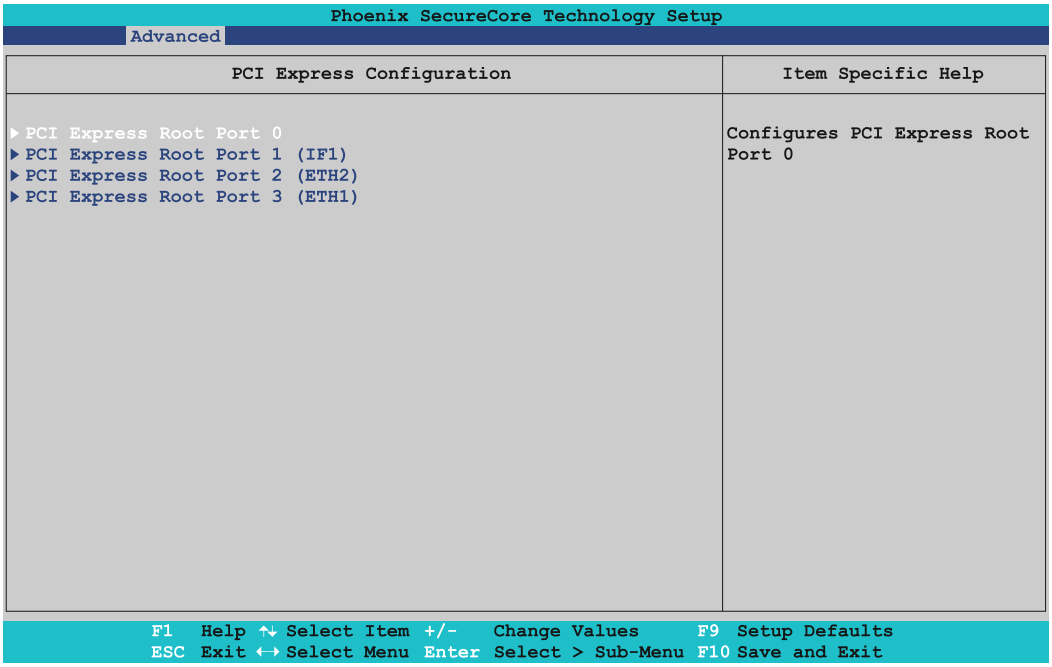

BIOS setting	Explanation	Configuration options	Effect
PCI Express root port 0	Configures PCI Express settings on port 0.	Enter	Opens this submenu See "PCI Express root port 0 to 3" on page 222.
PCI Express root port 1 (IF1)	Configures PCI Express settings on port 1 (interface option).	Enter	Opens this submenu See "PCI Express root port 0 to 3" on page 222.
PCI Express root port 2 (ETH2)	Configures PCI Express settings on port 2 (ETH2).	Enter	Opens this submenu See "PCI Express root port 0 to 3" on page 222.
PCI Express root port 3 (ETH1)	Configures PCI Express settings on port 3 (ETH1).	Enter	Opens this submenu See "PCI Express root port 0 to 3" on page 222.

7.1.6.5.1 PCI Express root port 0 to 3

```
Phoenix SecureCore Technology Setup
Advanced

PCI Express Configuration                    Item Specific Help

PCI Express Root Port 0   [Enable]           Enable or Disable PCI
PCIe 0 Speed              [Auto]             Express Root Port
ASPM                      [Disable]
Assign INT to Root Port   [Enable]

F1   Help ↑↓ Select Item  +/-    Change Values      F9  Setup Defaults
ESC  Exit ←→ Select Menu  Enter  Select > Sub-Menu  F10 Save and Exit
```

BIOS setting	Explanation	Configuration options	Effect
PCI Express root port x	Option for enabling/disabling the PCI Express root port x.	**Enabled**	Enables the PCI Express root port.
		Disabled	Disables the PCI Express root port.
PCIe x speed	Option for setting the PCI Express transfer rate.	**Auto**	Automatically sets the transfer rate.
		Gen1	Maximum transfer rate = 2.5 GT/s.
		Gen2	Maximum transfer rate = 5 GT/s.
ASPM	*Active State Power Management* Option for setting a power saving function (L0s/L1) for PCIe devices if they do not require full power.	**Disabled**	Disables this function.
		L0s	Enables the L0 energy saving function.
		L0sL1	Automatic assignment of L0s or L1 power saving function by the PCIe device.
		Auto	Automatic assignment by BIOS and the operating system.
Assign INT to root port	Option for enabling/disabling the IRQ for the root port.	**Enabled**	Enables this function.
		Disabled	Disables this function.

7.1.6.6 USB configuration

```
Phoenix SecureCore Technology Setup
Advanced

USB Configuration                            Item Specific Help

XHCI Controller           [Smart Auto]       Mode of operation of xHCI
EHCI Controller           [Enable]           controller.
USB Per-Port Control      [Enable]
USB Port #0               [Enable]
USB Port #1               [Enable]
USB Port #2               [Enable]
USB Port #3               [Enable]

F1   Help ↑↓ Select Item  +/-    Change Values      F9  Setup Defaults
ESC  Exit ←→ Select Menu  Enter  Select > Sub-Menu  F10 Save and Exit
```

BIOS setting	Explanation	Configuration options	Effect
XHCI controller	Option for setting the xHCI controllers.	**Smart auto**	The USB 3.0 interfaces are only treated as USB 3.0 when the operating system is started; until then, they are treated as USB 2.0 interfaces. If the PC is rebooted, then the USB 3.0 interfaces are handled as USB 3.0 during booting.
		Disabled	The xHCI controller is disabled. All USB 3.0 interfaces become USB 2.0 interfaces.
		Enabled	The xHCI controller is enabled and the USB 3.0 interfaces are always recognized as such.
EHCI controller	Sets the USB EHCI controller for the USB ports.	Disabled	Disables the EHCI controller.
		Enabled	Enables the EHCI controller.
USB per-port control	Option for enabling/disabling individual USB ports.	Disabled	The BIOS settings "USB port #x" are hidden.
		Enabled	The BIOS settings "USB port #x" are displayed.
USB port #0	Option for enabling/disabling the USB1 port.	Disabled	The USB port is disabled.
		Enabled	The USB port is enabled.
USB port #1	Option for enabling/disabling the USB2 port.	Disabled	The USB port is disabled.
		Enabled	The USB port is enabled.
USB port #2	Option for enabling/disabling the multi-touch or the optional front USB interface.	Disabled	The USB port is disabled.
		Enabled	The USB port is enabled.
USB port #3	Option for enabling/disabling the multi-touch or the optional front USB interface.	Disabled	The USB port is disabled.
		Enabled	The USB port is enabled.

7.1.6.7 SATA configuration

```
                    Phoenix SecureCore Technology Setup
          Advanced
SATA Configuration                                  Item Specific Help

Chipset SATA                      [Enable]          Enables or Disables the
Chipset SATA Mode                 [AHCI]            Chipset SATA Controller.
SATA Port 0 Hot Plug Capability [Disable]
SATA Port 1 Hot Plug Capability [Disable]

F1   Help ↑↓ Select Item  +/-    Change Values      F9  Setup Defaults
ESC  Exit ←→ Select Menu  Enter  Select > Sub-Menu  F10 Save and Exit
```

BIOS setting	Explanation	Configuration options	Effect
Chipset SATA	Option for setting the SATA support.	**Enabled**	Provides support for SATA devices.
		Disabled	No support for SATA devices.
Chipset SATA mode	Option for setting supported serial ATA connections.	IDE	The serial ATA hard disk is used as a parallel ATA physical disk drive. It is not possible to configure the SATA ports.
		AHCI	The AHCI setting enables the internal memory driver for SATA functions, which increases the storage performance for random read-write access by allowing the drive itself to determine the sequence of commands.
SATA Port 0 hot plug capability	Option for setting the hot plugging for SATA port 0.	Enabled	Enables hot plugging for SATA interface 0. Devices can be connected/disconnected during operation.
		Disabled	Disables hot plugging for SATA port 0.
SATA Port 1 hot plug capability	Option for setting the hot plugging for SATA port 1.	Enabled	Enables hot plugging for SATA interface 1. Devices can be connected/disconnected during operation.
		Disabled	Disables hot plugging for SATA port 1.

7.1.6.8 Miscellaneous configuration

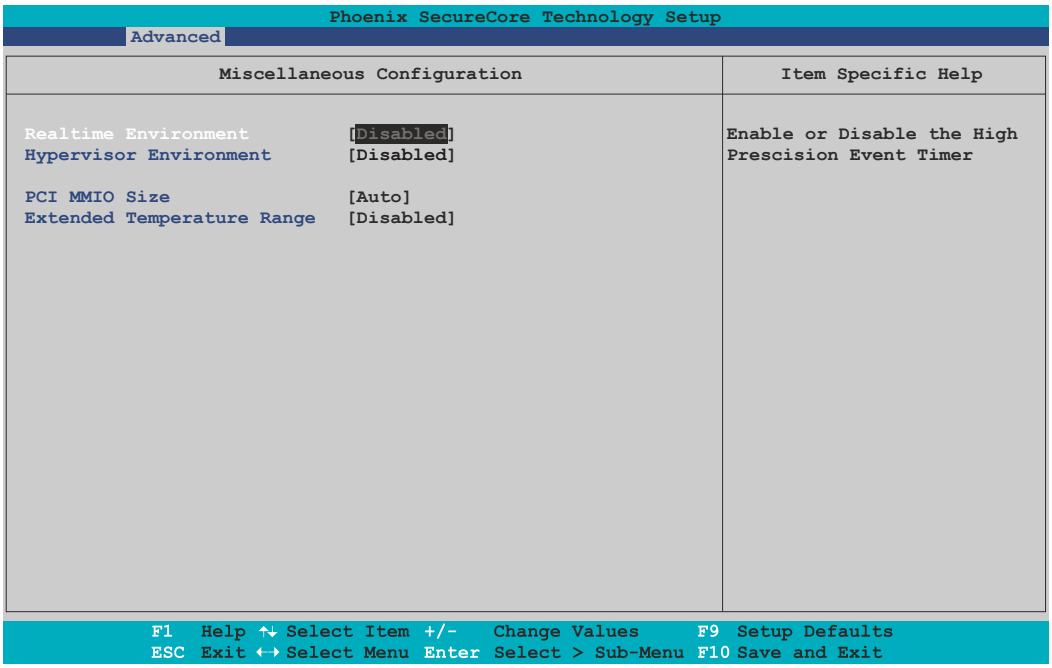

BIOS setting	Explanation	Configuration options	Effect
Realtime environment	Configures settings for real-time operating systems such as Automation Runtime.	**Disabled**	Disables this function.
		Enabled	Disables DTS, turbo boost, SpeedStep, ASPM and the INT of root port 1 (IF). In addition, the CPU C-states are disabled and the boot performance mode is set to "Max. performance". Starting with BIOS V1.41, parameter "RC6" (render standby) is also disabled. The options that are configured and disabled by the real-time environment are grayed out and cannot be changed.
Hypervisor environment	This option configures settings for hypervisor operation.	**Disabled**	Disables this function.
		Enabled	VTX (Virtualization Technology) is enabled. The options that are configured by the hypervisor environment are grayed out and cannot be changed.
PCI MMIO size	Option for setting the PCI MMIO (memory mapped IO) size. **Information:** **With 32-bit operating systems, the set MMIO size is stored under 4 GB in memory. This means that systems with 4 GB of main memory have less MMIO size available.** **This is not the case with 64-bit operating systems.**	2 GB, 1.5 GB, 1.25 GB, 1 GB, **Auto**	Sets the selected memory size.
Extended temperature range	Option for setting the RAM refresh rate for extended temperature.	**Disabled**	Default RAM refresh rate.
		Enabled	Increases the RAM refresh rate.

7.1.6.9 Thermal configuration

```
Phoenix SecureCore Technology Setup
Advanced

Thermal Configuration                          Item Specific Help

Thermal Configuration Prameters
Critical Trip Point              [+103°C / +217°F]   This value controls the
Passive Trip Point               [+95°C / +203°F]    temperature of the ACPI
                                                     Critical Trip Point - the
                                                     point in which the OS will
                                                     shut the system off.

F1   Help ↑↓ Select Item +/-   Change Values     F9  Setup Defaults
ESC  Exit ←→ Select Menu Enter Select > Sub-Menu F10 Save and Exit
```

BIOS setting	Explanation	Configuration options	Effect
Critical trip point	This function sets the CPU temperature at which the operating system automatically shuts down the PC.	15°C / 59°F, 23°C / 73°F, 31°C / 88°F, 39°C / 102°F, 47°C / 117°F, 55°C / 131°F, 63°C / 145°F, 71°C / 160°F, 79°C / 174°F, 85°C / 185°F, 87°C / 189°F, 90°C / 194°F, 95°C / 203°F, **103°C / 217°F**, 111°C / 232°F	Temperature setting for the critical trip point.
		Disabled	Disables this function.
Passive trip point	Function for setting a CPU temperature at which the operating system throttles the CPU speed.	15°C / 59°F, 23°C / 73°F, 31°C / 88°F, 39°C / 102°F, 47°C / 117°F, 55°C / 131°F, 63°C / 145°F, 71°C / 160°F, 79°C / 174°F, 85°C / 185°F, 87°C / 189°F, 90°C / 194°F, **95°C / 203°F**, 103°C / 217°F	Temperature setting for the passive trip point.
		Disabled	Disables this function.

7.1.7 Security

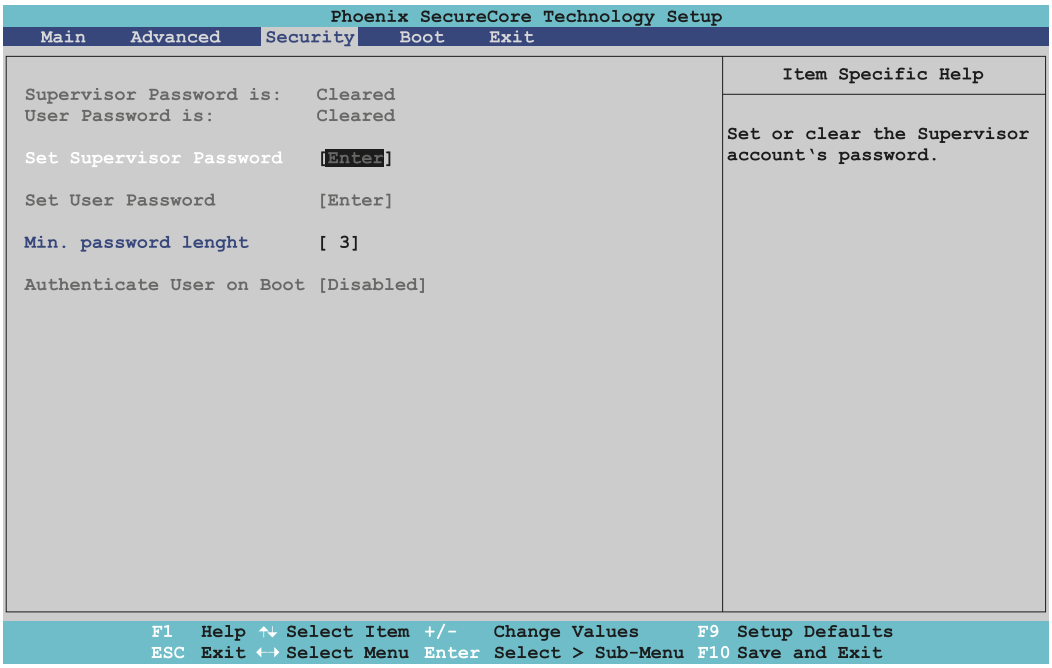

BIOS setting	Explanation	Configuration options	Effect
Supervisor password is:	Indicates whether a supervisor password has been assigned.	None	-
User password is:	Indicates whether a user password has been assigned.	None	-
Set supervisor password	Function for entering, changing and deleting a supervisor password. All BIOS settings can only be edited with the supervisor password.	Enter	Password entry.
Set user password[1)]	Function for entering, changing and deleting a user password. With the supervisor password, only certain BIOS settings can be edited.	Enter	Password entry.
Min. password length	Function for setting the minimum password length.	**3** to 20	Enter the minimum password length.
Authenticate user on boot[1)]	Option for setting whether the user password must be entered for each boot procedure.	Disabled	A user password is not required for the boot procedure.
		Enabled	The user password must be entered for each boot procedure.

1) The setting can only be set if a *supervisor password* is assigned.

7.1.8 Boot

```
Phoenix SecureCore Technology Setup
Main   Advanced   Security   Boot   Exit

▶ Boot Device Priority                    Item Specific Help
▶ Boot Configuration

                                          Press <Enter> to select the
                                          Boot Device Priority
                                          Configuration Setup
                                          options.

F1   Help ↑↓ Select Item  +/-   Change Values      F9  Setup Defaults
ESC  Exit ←→ Select Menu  Enter Select > Sub-Menu  F10 Save and Exit
```

BIOS setting	Explanation	Configuration options	Effect
Boot device priority	Configures the boot sequence.	Enter	Opens this submenu See "Boot device priority" on page 227.
Boot configuration	Configures boot settings.	Enter	Opens this submenu See "Boot configuration" on page 228.

7.1.8.1 Boot device priority

```
Phoenix SecureCore Technology Setup
Main   Advanced   Security   Boot   Exit

Boot Device Priority                      Item Specific Help

Boot Priority Order                       Key used to view or
   1. SATA HDD0:                          configure devices: ↑ and ↓
   2. USB CD:                             arrows Select a device. ´+´
   3. USB FDD:                            and ´-´ move the device up
   4. USBHDD P0:                          or down. ´Shift +1´ enables
   5. USBHDD P1:                          or disables a device. ´Del´
   6. USBHDD P2:                          deletes an unprotected
   7. USBHDD P3:                          device.
   8. ATAPI CD:
   9. SATA HDD1:
  10. PCI LAN0:
  11. PCI LAN1:
  12. Watchdog
  13. Internal Shell

F1   Help ↑↓ Select Item  +/-   Change Values      F9  Setup Defaults
ESC  Exit ←→ Select Menu  Enter Select > Sub-Menu  F10 Save and Exit
```

BIOS setting	Explanation	Configuration options	Effect
Boot priority order	Option for setting the desired boot sequence.	SATA HDD0:	Specifies the desired boot sequence. Boot devices can be selected with the ↑and ↓arrow keys. Use "+" and "-" to change the sequence. "Shift + 1" activates/deactivates a boot device.
		USB CD:	
		USB FDD:	
		USBHDD P0:	
		USBHDD P1:	
		USBHDD P2:	
		USBHDD P3:	
		ATAPI CD:	
		SATA HDD1:	
		PCI LAN0:	
		PCI LAN1:	
		Watchdog[1)]	
		Internal shell	

1) This watchdog can be used for sporadic recognition problems with CFast cards. If such a case occurs, a reset is triggered.
If boot problems occur with SATA devices, their firmware version must be checked and updated if necessary.

7.1.8.2 Boot configuration

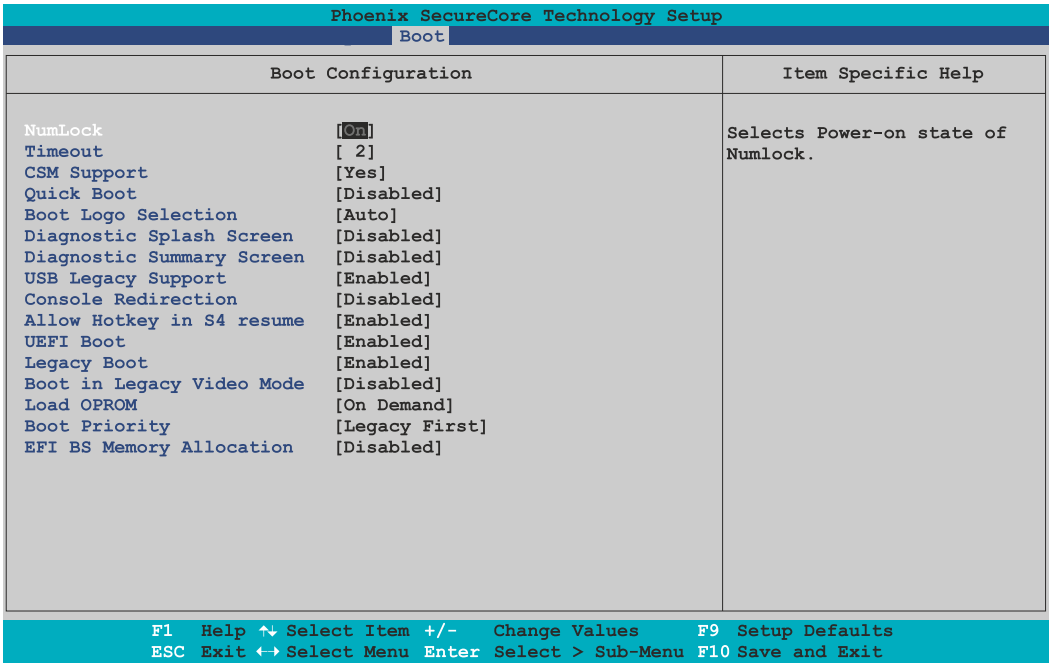

BIOS setting	Explanation	Configuration options	Effect
NumLock	Option for setting the numeric keypad when booting the system.	**On**	Enables the numeric keypad.
		Off	Only enables the cursor (movement) functions of the numeric keypad.
Timeout	Option for setting how long the setup activation key (key for entering BIOS) and boot logo is displayed.	**2** to 99	Displays the setup activation key for x seconds.
CSM support	The compatibility support module (BIOS compatibility mode) supports backward compatibility for legacy BIOS settings of the legacy boot depending on the operating system.	**Yes**	BIOS compatibility mode is enabled and operating systems without UEFI support can be used. Legacy and UEFI boot are possible.
		No	The BIOS compatibility mode is enabled and only the UEFI boot is possible. Legacy boot is not supported.
Quick boot	This function reduces the boot time by skipping some POST procedures.	**Disabled**	Disables this function.
		Enabled	Enables this function.
Boot logo selection	Option for displaying the boot logo.	Disabled	The default logo is displayed.
		Enabled	The OEM logo is displayed.
		Auto	The OEM logo is automatically displayed if it exists.
Diagnostic splash screen	Setting for enabling/disabling the "Diagnostic splash screen" during the boot procedure.	**Disabled**	The "Diagnostic splash screen" is not displayed.
		Enabled	The "Diagnostic splash screen" is always displayed during the boot procedure.
Diagnostic summary screen	Option for enabling/disabling the "Diagnostic summary screen" during the boot procedure.	**Disabled**	Disables this function.
		Enabled	Enables this function.
USB legacy support	Option for setting the USB legacy support.	Disabled	Disables this function. The complete USB support is disabled (mouse, keyboard, USB mass storage, etc.).
		Enabled	Enables this function.

BIOS setting	Explanation	Configuration options	Effect
Console redirection	Option for setting the remote console. With the remote console, BIOS Setup can be accessed via the serial interface using a terminal emulator (PuTTY or HyperTerminal). **Information:** **This function is only possible with IF option 5ACCIF01.FPLS-000 IF or 5ACCIF01.FPLS-001.**	**Disabled**	Disables this function.
		Enabled	Enables this function.
Console port[1)]	Option for setting the serial interface.	All	Can be accessed via any serial interface.
		UART A, UART B, UART C, UART D, UART E, UART F	Accessed via the selected serial interface.
Terminal type[1)]	Option for setting keyboard input.	ANSI	Enables the ANSI convention (extended ASCII character set).
		VT100	Enables the VT100 convention (ASCII character set).
		VT100+	Enables the VT100+ convention (ASCII character set and support for color, function keys, etc.).
		UTF8	Enables the UTF-8 convention (uses UTF-8 encoding to assign Unicode characters to one or more bytes).
Baud rate[1)]	Option for setting the transfer rate of the serial interface (bits per second).	9600, 19200, 38400, 57600, 115200	Enables a transfer rate of x bits
Flow control[1)]	Option for setting the data flow control.	None	Disables data flow control.
		RTS/CTS	Enables hardware handshake.
		XON/XOFF	Enables software handshake.
Continue C.R. after POST[1)]	Option for enabling/disabling console redirection after POST.	Disabled	Disables this function.
		Enabled	Enables this function.
Allow hotkey in S4 resume	Option for enabling/disabling hotkey detection from the S4 state.	Disabled	Disables this function.
		Enabled	Enables this function. The PC exits the S4 state when a key is pressed.
UEFI boot	Option for enabling/disabling the UEFI boot.	Disabled	Disables this function.
		Enabled	Enables this function.
Legacy boot	Option for enabling/disabling the legacy boot.	Disabled	Disables this function.
		Enabled	Enables this function.
Boot in legacy video mode[2)]	Option for enabling/disabling graphic initialization after BIOS POST with legacy ROM.	**Disabled**	Disables this function.
		Enabled	Enables this function. **Information:** **Nothing is displayed after BIOS POST; the screen remains black.**
Load OPROM[2)]	Setting for loading all option ROMs or depending on the boot device.	All	All option ROMs are loaded.
		On demand	Option ROMs are loaded depending on the boot device.
Boot priority	Setting for prioritizing the boot option between UEFI and legacy boot.	UEFI first	Boots first from UEFI ROM.
		Legacy first	Boots first from legacy ROM.
EFI BS memory allocation	Option for setting the memory for the EFI boot services.	**Disabled**	The minimum memory required for EFI boot services is reserved.
		Enabled	The maximum memory required for EFI boot services (approx. 130 MB more) is reserved.

1) This setting is only possible if *Console redirection* is set to *Enabled*.
2) This setting is only possible if *Legacy boot* is set to *Enabled*.

7.1.9 Exit

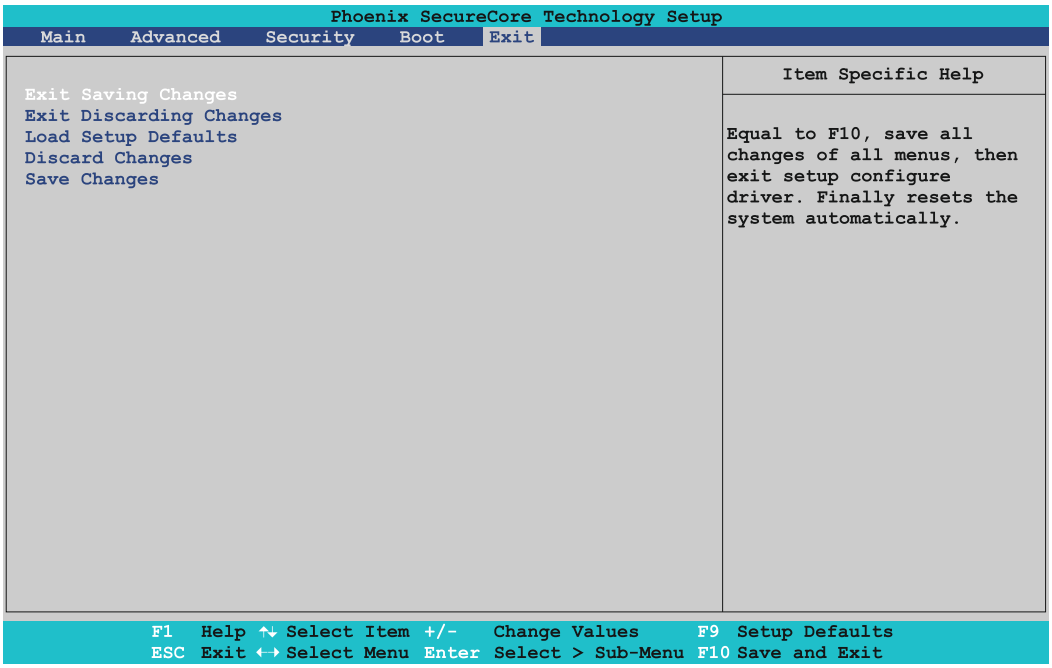

BIOS setting	Explanation	Configuration options	Effect
Exit saving changes	Selecting this option closes BIOS Setup. Selecting this option saves any changes made to CMOS after confirmation.	Yes/No	
Exit discarding changes	Selecting this option closes BIOS Setup without saving any changes made.	Yes/No	
Load setup defaults	Selecting this option restores the BIOS default values.	Yes/No	
Discard changes	Selecting this option resets any settings that may have been made but forgotten in the meantime (provided they have not yet been saved).	Yes/No	
Save changes	Selecting this option saves any changes made to CMOS after confirmation.	Yes/No	

7.1.10 Allocation of resources

7.1.10.1 RAM address assignment

Address in hexadecimal	Size	Resource
00000000 to 0009FFFF	640 kB	DOS (real mode) memory
000A0000 to 000BFFFF	128 kB	Video memory
000C0000 to 000CBFFF	48 kB	VGA BIOS
000CC000 to 000DFFFF	80 kB	Option ROM or XMS
000E0000 to 000FFFFF	64 kB	System BIOS shadow RAM
00100000 to 7FFFFFFFF	2 GB to 1 MB	System memory (low DRAM)
80000000 to FFF00000	2 GB to 1 MB	PCI low MMIO
FEC00000 to FEC00040	64 bytes	IO APIC
FED00000 to FED003FF	1 kB	HPET (timer)
FED01000 to FED1CFFF	112 kB	Chipset internal register space
FEE00000 to FEFFFFFF	2 MB	Local APIC
100000000 to 17FFFFFFF	2 GB	System memory (high DRAM)
180000000 to F00000000	58 GB	High MMIO

7.1.10.2 I/O address assignments

I/O address	Resource
0000h - 00FFh	Motherboard resources
02E8h - 02EFh	COM D (optional)
02F8h - 02FFh	COM B (optional)
0384h - 0385h	CAN controller (optional)
03B0h - 03DFh	Video system
03E8h - 03EFh	COM C (optional)
03F8h - 03FFh	COM A (optional)
0400h - 04FFh	Motherboard resources
0500h - 0G1Fh	Motherboard resources
0CF8h - 0CFBh	PCI config address register
0CFCh - 0CFFh	PCI config data register
0D00h - FFFFh	PCI / PCI Express bus
4100h - 41FFh	MTCX

7.1.10.3 Interrupt assignments in PIC mode

IRQ		0	1	2	3	4	5	6	7	8	9	10	11	12	13	14	15	NONE
System timer		●																
Keyboard			●															
IRQ cascade				●														
ACPI[1]											●							
Real-time clock										●								
Co-processor (FPU)															●			
B&R Option-al	COM B[2]				●	○	○	○	○			○	○	○				
	COM C[3]				○	○	○	○	○			○	●	○				
	COM A[4]				○	●	○	○	○			○	○	○				
	COM D[5]				○	○	○	○	○			●	○	○				
	CAN				○	○	○	○	○			●	○	○				

1) **A**dvanced **C**onfiguration and **P**ower **I**nterface
2) Resistive onboard touchscreen for Panel PC 2100
3) Monitor/Panel option, SDL/DVI transmitter, SDL3 transmitter
4) 5ACCIF01.FPLS-000 IF option, 5ACCIF01.FPLS-001, COM A.
5) IF option

● ... Default setting
○ ... Optional setting

7.1.10.4 Interrupt assignments in APIC mode

A total of 23 IRQs are available in APIC (**A**dvanced **P**rogrammable **I**nterrupt **C**ontroller) mode. Enabling this option is only effective if done before the Windows operating system is installed.

IRQ		0	1	2	3	4	5	6	7	8	9	10	11	12	13	14	15	16	17	18	19	20	21	22	23	NONE
System timer		●																								
Keyboard			●																							
IRQ cascade				●																						
ACPI[1]											●															
Real-time clock										●																
Co-processor (FPU)															●											
B&R Option-al	COM B[2]				●	○	○	○	○			○	○	○												
	COM C[3]				○	○	○	○	○			○	●	○												
	COM A[4]				○	●	○	○	○			○	○	○												
	COM D[5]				○	○	○	○	○			●	○	○												
	CAN				○	○	○	○	○			●	○	○												
PIRQ A[6]																		●								
PIRQ B[7]																			●							
PIRQ C[8]																				●						
PIRQ D[9]																					●					
PIRQ E[10]																						●				
PIRQ F[11]																							●			
PIRQ G[12]																								●		
PIRQ H[13]																									●	

1) **A**dvanced **C**onfiguration and **P**ower **I**nterface
2) Resistive onboard touchscreen for Panel PC 2100
3) Monitor/Panel option, SDL/DVI transmitter, SDL3 transmitter
4) 5ACCIF01.FPLS-000 IF option, 5ACCIF01.FPLS-001, COM A.
5) IF option
6) PIRQ A: For PCIe; PCI Express root port 0, VGA, controller
7) PIRQ B: For PCIe; PCI Express root port 1, optional interface option.
8) PIRQ C: For PCIe; PCI Express root port 2, SMBus controller, ETH2 controller
9) PIRQ D: For PCIe; PCI Express root port 3, serial ATA controller, ETH1 controller
10) PIRQ E: XHCI host controller
11) PIRQ F: Unused
12) PIRQ G: Optional high definition audio controller
13) PIRQ H: EHCI host controller

● ... Default setting
○ ... Optional setting

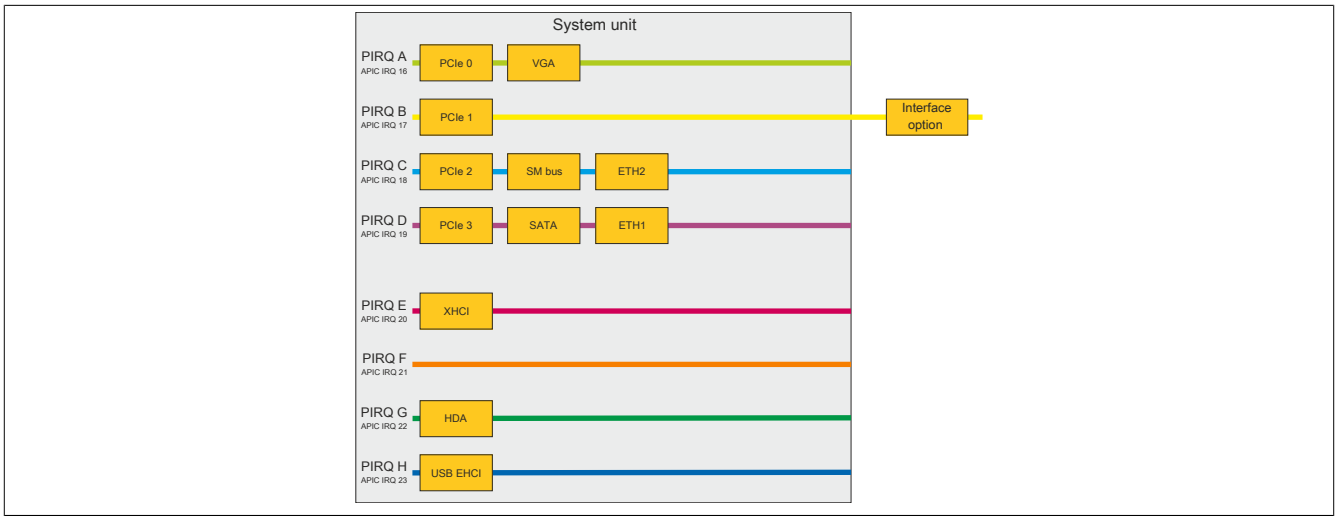

Figure 6: PCIe routing with APIC enabled

7.2 Upgrade information

> **Warning!**
>
> **The BIOS and firmware on B&R devices must always be kept up to date. New versions can be downloaded from the B&R website (www.br-automation.com).**

7.2.1 BIOS upgrade

An upgrade may be necessary for the following reason, for example:

- To update the functions implemented in BIOS Setup or to add newly implemented functions or components (for information about changes, see the readme file of the BIOS upgrade).

7.2.1.1 Basic information

> **Information:**
>
> **During a BIOS upgrade, individually saved BIOS settings are deleted.**

It is helpful to determine the different software versions before starting the upgrade.

7.2.1.1.1 Which BIOS version and firmware are already installed?

This information is listed on the following BIOS Setup page.

- After switching on the PC, press "F2" to access BIOS Setup.
- Select "OEM features" from BIOS main menu "Advanced".

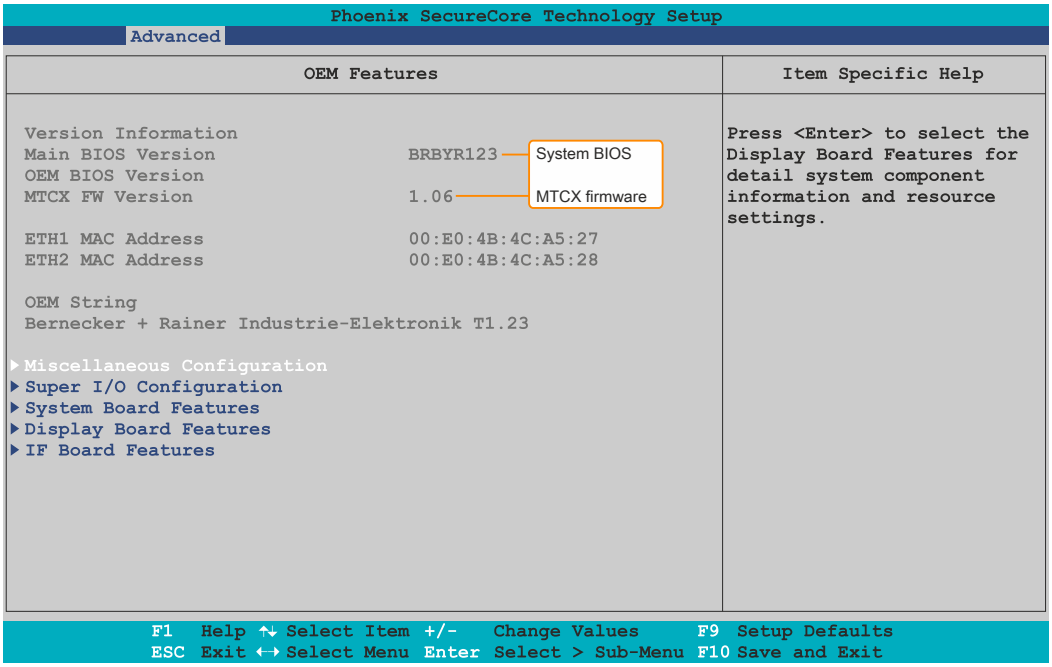

7.2.1.2 Procedure in the EFI shell

> **Caution!**
>
> **The PC is not permitted to be switched off or reset while performing an upgrade!**

1. Download the ZIP file from the B&R website (www.br-automation.com).
2. Unzip the ZIP file and copy the files to a USB flash drive formatted in FAT16 or FAT32. Alternatively, a CFast card can also be used.
3. Reboot the PC and select "Internal shell" as the boot device ("F5" key to open the boot menu).
4. After booting the EFI shell, "startup.nsh" is executed and the BIOS upgrade is started.
5. After a successful upgrade, the system must be rebooted.
6. Reboot and press key "F2" to enter BIOS Setup and load the setup defaults; then select "Save changes and exit".

7.2.2 Upgrading the firmware

A current firmware upgrade can be downloaded directly from the Downloads section of the B&R website (www.br-automation.com).

> **Caution!**
>
> **The PC is not permitted to be switched off or reset while performing an upgrade!**

7.2.2.1 Procedure in Windows (ADI Control Center)

1. Download the ZIP file from the B&R website (www.br-automation.com).
2. Open the *ADI Control Center* in the Control Panel.
3. Open tab **Versions**.
4. Click on the desired update under **PC firmware** or **Panel firmware**. The dialog box opens.
5. Enter the name of the firmware file or select a file under "Filename".
6. Execute file with **Open**.
7. After a successful upgrade, the system must be switched off and on again for the upgrade to take effect.

✓ The upgrade is installed and in effect.

The transfer can be canceled by clicking on **Cancel** in dialog box "Download". This is disabled while writing to flash memory.

Erasing the data in flash memory can take several seconds depending on the memory module used. During this time, the progress indicator is not updated.

> **Information:**
>
> **For more detailed information about saving and updating the firmware, see the ADI driver user's manual. This is available for download at www.br-automation.com.**

7.2.2.2 Procedure in the EFI shell

1. Download the ZIP file from the B&R website (www.br-automation.com).
2. Unzip the ZIP file and copy the files to a USB flash drive formatted in FAT16 or FAT32. Alternatively, a CFast card can also be used.
3. Reboot the PC and select "Internal shell" as the boot device ("F5" key to open the boot menu).
4. After booting the EFI shell, "startup.nsh" is executed and the MTCX upgrade is started.
5. After a successful upgrade, a the system must be switched off and on again.

> **Warning!**
>
> **Pressing panel keys during firmware transfer is not permitted! This can interfere with the process.**

> **Information:**
>
> **The power supply to the PC must be switched off and on again for the new firmware to take effect and the updated version to be displayed.**

7.3 Multi-touch drivers

Multi-touch panels are approved as human-interface devices (i.e. multi-touch support from the operating system) for the following operating systems:

- Windows 10 IoT Enterprise 2016 LTSB
- Windows 10 IoT Enterprise 2015 LTSB
- Windows Embedded 8.1 Industry Pro
- Windows 7 Professional/Ultimate
- Windows Embedded Standard 7 Premium
- B&R Linux 9
- B&R Linux 8

No guarantee can be given for multi-touch or single-touch operation, compatibility and functionality for operation with other operating systems and/or individual touch screen drivers.

7.4 Operating systems

7.4.1 Windows 10 IoT Enterprise 2016 LTSB

7.4.1.1 General information

Windows 10 IoT Enterprise 2016 LTSB is a version of Windows 10 Enterprise specifically developed for use in industrial applications (Long-Term Servicing Branch).

> **Information:**
>
> **For detailed information, see the user's manual of the operating system. This is available for download on the B&R website (www.br-automation.com).**

7.4.1.2 PPC2100 - Order data

Order number	Short description	Figure
	Windows 10 IoT Enterprise	
5SWW10.0543-MUL	Windows 10 IoT Enterprise 2016 LTSB - 64-bit - Entry - Multilingual - PPC2100 chipset Bay Trail - License (without Recovery DVD) - Only available with a new device	
	Optional accessories	
	Windows 10 IoT Enterprise 2016 LTSB	
5SWW10.0800-MUL	Windows 10 IoT Enterprise 2016 LTSB - 64-bit - Language Pack DVD	

Table 83: 5SWW10.0543-MUL - Order data

7.4.1.3 PPC2100 - Overview

Order number	5SWW10.0543-MUL
Operating system	
Target systems	
Industrial PC	PPC2100
Processor	E3826/E3827/E3845
Chipset	Bay Trail
Edition	Entry
Architecture	64-bit (legacy BIOS boot)
Language	Multilingual
Minimum size of RAM	2 GB [1)]
Minimum size of data storage medium	20 GB [2)]

Table 84: 5SWW10.0543-MUL - Technical data

1) The specified memory size is a minimum requirement according to Microsoft. B&R recommends using 4 GB RAM or more for 64-bit operating systems.
2) The specified minimum size of the data storage medium does not take into account the memory requirements of additional language packages.

7.4.1.4 Features

The feature list shows the most important device functions in Windows 10 IoT Enterprise 2016 LTSB.

Function	Windows 10 IoT Enterprise 2016 LTSB
Range of functions in Windows 10 Enterprise	✓
Internet Explorer 11 including Enterprise Mode	✓
Multi-touch support	✓
Multilingual support	Can be installed via Language Pack DVDs (default language is English)
Page file	Configurable (disabled by default in the image by the UWF)
Hibernate file	Configurable (disabled by default in the image)
System restore	Configurable (disabled by default in the image by the UWF)
SuperFetch	Configurable (disabled by default in the image by the UWF)
File indexing service	Configurable (disabled by default in the image by the UWF)
Fast boot	Configurable (disabled by default in the image by the UWF)
Defragmentation service	✓ (Disabled when enabling the UWF)
Additional embedded lockdown functions	
Assigned access	Configurable
AppLocker	Configurable
Shell Launcher	Configurable
Unified Write Filter	✓
Keyboard Filter	Configurable

Table 85: Device functions in Windows 10 IoT Enterprise 2016 LTSB

7.4.1.5 Installation

Windows 10 IoT Enterprise 2016 LTSB is preinstalled by B&R on a suitable data storage medium (64-bit: at least 20 GB). After the system is switched on for the first time, it runs through the out-of-box experience (OOBE), which allows different settings to be made (e.g. language, region, keyboard, computer name, username).

Windows 10 IoT Enterprise 2016 LTSB is installed on the APC2100 and PPC2100 in BIOS mode.

7.4.1.6 Drivers

The operating system contains all drivers necessary for operation. If an older driver version is installed, the latest version can be downloaded and installed from the B&R website (www.br-automation.com). It is important to ensure that "Unified Write Filter (UWF)" is disabled.

> **Information:**
>
> **Necessary drivers must be downloaded from the B&R website, not from manufacturer websites.**

7.4.1.7 Activation

Windows 10 IoT Enterprise 2016 LTSB must be activated like its predecessor Windows 10 IoT Enterprise 2015 LTSB. This takes place at B&R.

The activation status can be checked in the Control Panel:

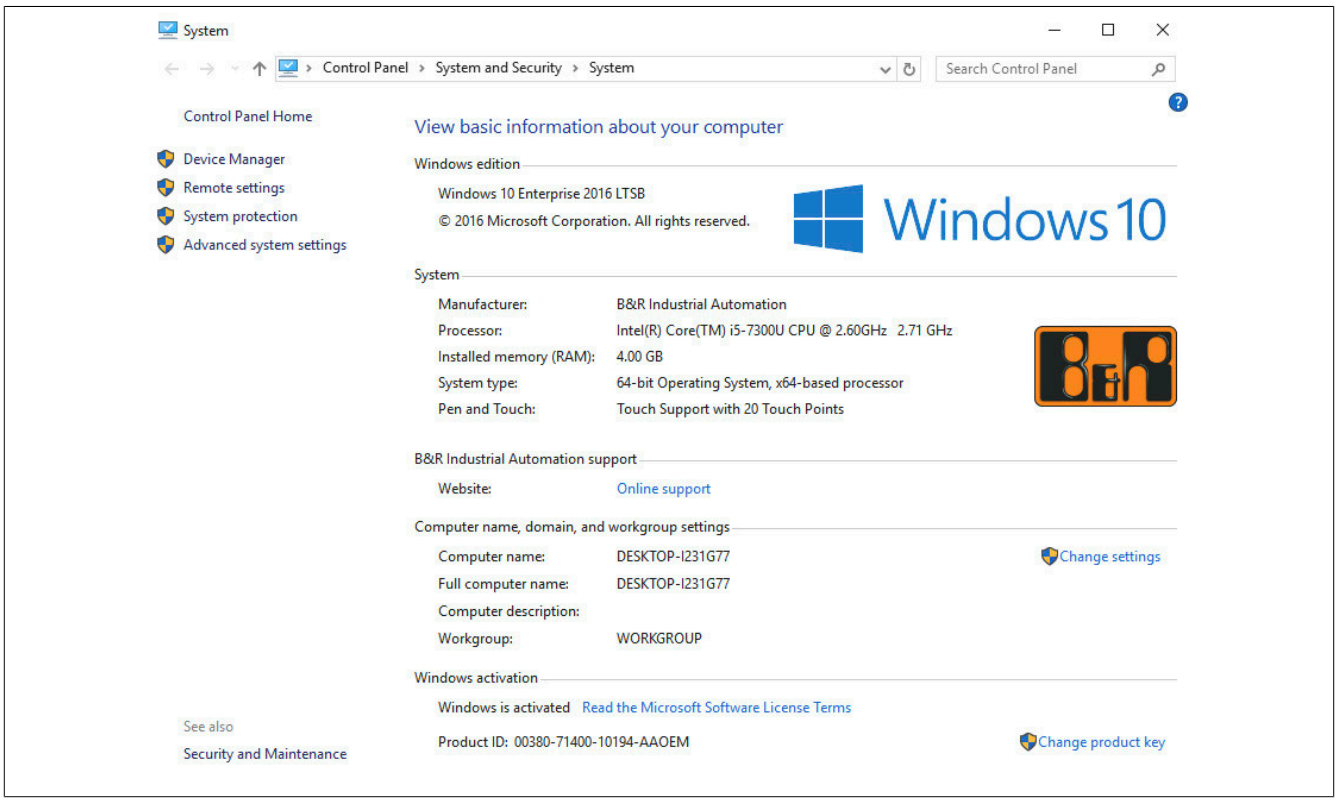

Figure 7: System properties

Activation carried out by B&R is supported by special B&R extensions in the operating system and theoretically not lost when the hardware is changed (e.g. replacement of components in the event of repair) or when the system is reinstalled, unlike Windows 10 IoT Enterprise 2015 LTSB (Microsoft reserves the right to make technical changes without notice).

> **Information:**
>
> **It is not required to enter a product key for activation.**

7.4.1.8 Characteristics, limitations

- Unlike standard Windows 10 Enterprise, Windows 10 IoT Enterprise 2016 LTSB does not include Cortana, the Microsoft Edge browser or the Microsoft Store, for example.
- The LTSB version is based on build 14393 of Windows 10 and does not receive any feature updates.

The version installed by B&R contains optimized settings for operation in an industrial environment. These are described in detail in a manual for Windows 10 IoT Enterprise 2016 LTSB. This can be downloaded at no cost from the Downloads section of the B&R website (www.br-automation.com) (login required).

Information:

These settings as well as the features not included in the LTSB version cause different behavior compared to a standard Windows 10 Enterprise installation.

7.4.1.9 Supported display resolutions

Per Microsoft requirements, Windows 10 IoT Enterprise 2016 LTSB requires SVGA resolution (800 x 600) or higher to enable full operation of the Windows user interface (including system dialog boxes, apps, etc.). A lower resolution can be selected for applications.

7.4.2 Windows 10 IoT Enterprise 2015 LTSB

7.4.2.1 General information

Windows 10 IoT Enterprise 2015 LTSB is the successor to Windows Embedded 8.1 Industry and based on new Windows 10 technology. The operating system also offers a higher level of protection for industrial applications through additional lockdown functions. Windows 10 IoT Enterprise 2015 LTSB is a special version of Windows 10 Enterprise for industrial use (Long Term Servicing Branch).

> **Information:**
>
> **For detailed information, see the user's manual of the operating system. This is available for download on the B&R website (www.br-automation.com).**

7.4.2.2 PPC2100 - Order data

Order number	Short description	Figure
	Windows 10 IoT Enterprise 2016 LTSB	
5SWW10.0243-MUL	Windows 10 IoT Enterprise 2015 LTSB - 64-bit - Multilingual - PPC2100 chipset Bay Trail - License (without Recovery DVD) - Only available with a new device	
	Optional accessories	
	Windows 10 IoT Enterprise 2015 LTSB	
5SWW10.0200-MUL	Windows 10 IoT Enterprise 2015 LTSB - 64-bit - Multilingual - Recovery DVD	
5SWW10.0400-MUL	Windows 10 IoT Enterprise 2015 LTSB - 64-bit - Language Pack DVD	

Table 86: 5SWW10.0243-MUL - Order data

7.4.2.3 Overview

Order number	5SWW10.0243-MUL
Operating system	
Target systems	
Industrial PC	PPC2100
Processor	No limitation
Chipset	Bay Trail
Edition	Embedded
Architecture	64-bit
Language	Multilingual
Minimum size of RAM	2 GB [1)]
Minimum size of data storage medium	20 GB [2)]

Table 87: 5SWW10.0243-MUL - Technical data

1) The specified memory size is a minimum requirement according to Microsoft. B&R recommends using at least 4 GB RAM with 64-bit operating systems, however.
2) The specified minimum size of the data storage medium does not take into account the memory requirements of additional language packages.

7.4.2.4 Features

The feature list shows the most important device functions in Windows 10 IoT Enterprise 2015 LTSB.

Function	Windows 10 IoT Enterprise 2015 LTSB
Range of functions of Windows 10 Enterprise 2015 LTSB	✓
Internet Explorer 11 including Enterprise Mode	✓
Multi-touch support	✓
Multilingual support	Can be installed via Language Pack DVDs (default language is English)
Page file	Configurable (disabled by default in the image by the UWF)
Hibernate file	Configurable (disabled by default in the image)
System restore	Configurable (disabled by default in the image by the UWF)
SuperFetch	Configurable (disabled by default in the image by the UWF)
File indexing service	Configurable (disabled by default in the image by the UWF)
Fast boot	Configurable (disabled by default in the image by the UWF)
Defragmentation service	Configurable (disabled by default in the image by the UWF)
Additional embedded lockdown functions	
Assigned access	Configurable
AppLocker	Configurable
Shell Launcher	Configurable
Unified Write Filter	✓

Table 88: Device functions in Windows 10 IoT Enterprise 2015 LTSB

7.4.2.5 Installation

Windows 10 IoT Enterprise 2015 LTSB is preinstalled by B&R on a suitable data storage medium (64-bit: at least 20 GB). After the system has been switched on for the first time, it runs through the out-of-box experience (OOBE), which allows different settings to be made (e.g. language, region, keyboard, computer name, username).

7.4.2.6 Drivers

The operating system contains all drivers necessary for operation. If an older driver version is installed, the latest version can be downloaded and installed from the B&R website (www.br-automation.com). It is important to ensure that "Unified Write Filter (UWF)" is disabled.

> **Information:**
>
> **Necessary drivers must be downloaded from the B&R website, not from manufacturer websites.**

7.4.2.7 Activation

Windows 10 IoT Enterprise 2015 LTSB must be activated like its predecessor Windows Embedded 8.1 Industry Pro. This takes place at B&R.

The activation status can be checked in the Control Panel:

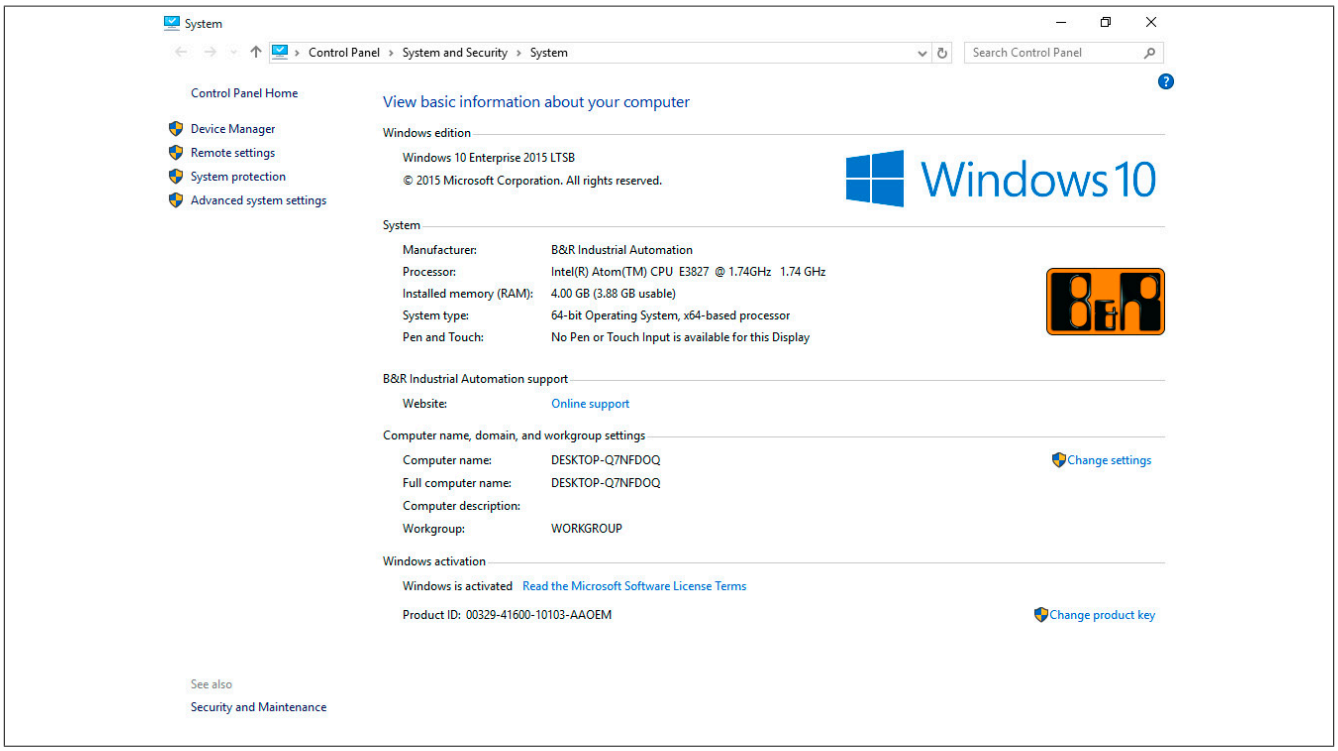

> **Information:**
>
> **Activation may be lost if the hardware is changed (e.g. replacement of components in the event of repairs) or if the system is reinstalled (e.g. with the recovery DVD).**

In this case, a message is displayed on the screen that is always visible (watermark):

Windows 10 IoT Enterprise 2015 LTSB does not carry out any restarts or show any pop-up messages, which means that it is fully functional at all times. "Personalization" is not possible, however (e.g. setting the desktop background image).

The product can be activated at a later time either over the phone or via the Internet. For corresponding instructions, see "Update & Security > Activation" in the Windows Control Panel.

Information:

Entering a product key is not required for a new activation in any case.

7.4.2.8 Content of delivery of the recovery DVD

The DVD with the order number 5SWW10.0200-MUL is for recovery purposes only.

Information:

This only performs the basic installation of a Windows 10 Enterprise 2015 LTSB. In contrast to the preinstalled operating system versions, the operating system does not include device-specific drivers (network, graphics, ADI, etc.) or optimized settings, nor is it activated! The product can be activated at a later time either over the phone or via the Internet (see "Activation").

7.4.2.9 Characteristics, limitations

- Unlike standard Windows 10 Enterprise, Windows 10 IoT Enterprise 2015 LTSB does not include Cortana, the Microsoft Edge browser or the Microsoft Store, for example.
- The LTSB version is based on build 10240 of Windows 10 and does not receive any feature updates.

The version installed by B&R contains optimized settings for operation in an industrial environment. These are described in detail in the "Windows 10 IoT 2015 LTSB working guide". This can be downloaded at no cost from the Downloads section of the B&R website (www.br-automation.com) (login required).

Information:

These settings as well as the features not included in the LTSB version cause different behavior compared to a standard Windows 10 Enterprise installation.

7.4.2.10 Supported display resolutions

Per Microsoft requirements, Windows 10 IoT Enterprise 2015 LTSB requires SVGA resolution (800 x 600) or higher to enable full operation of the Windows user interface (including system dialog boxes, apps, etc.). A lower resolution can be selected for applications.

7.4.3 Windows Embedded 8.1 Industry Pro

7.4.3.1 General information

Windows Embedded 8.1 Industry Pro is an operating system specially tailored to industrial applications. It is based on the new Windows 8.1 technology and contains additional lockdown functions to make industrial PCs more secure. The system is based on the complete Windows 8.1 Pro operating system and therefore offers full compatibility for applications and drivers.

7.4.3.2 Order data

Order number	Short description	Figure
	Windows Embedded 8.1 Industry Pro	
5SWWI8.0343-MUL	Windows Embedded 8.1 Industry Pro - 32-bit - Multilingual - For the PPC2100 - License	
5SWWI8.0443-MUL	Windows Embedded 8.1 Industry Pro - 64-bit - Multilingual - For the PPC2100 - License	
	Optional accessories	
	Windows Embedded 8.1 Industry Pro	
5SWWI8.0100-MUL	Windows Embedded 8.1 Industry Professional - 32-bit - Recovery DVD	
5SWWI8.0200-MUL	Windows Embedded 8.1 Industry Professional - 64-bit - Recovery DVD	
5SWWI8.0500-MUL	Windows Embedded 8.1 Industry Professional - 32-bit - Language Pack DVD	
5SWWI8.0600-MUL	Windows Embedded 8.1 Industry Professional - 64-bit - Language Pack DVD	

Table 89: 5SWWI8.0343-MUL, 5SWWI8.0443-MUL - Order data

7.4.3.3 Overview

Order number	5SWWI8.0343-MUL	5SWWI8.0443-MUL
Operating system		
Target systems		
Industrial PC	PPC2100	
Chipset	Bay Trail	
Edition	Embedded	
Architecture	32-bit	64-bit
Language	Multilingual	
Minimum size of RAM	1 GB [1)]	2 GB [2)]
Minimum size of data storage medium	16 GB [3)]	20 GB [3)]

Table 90: 5SWWI8.0343-MUL, 5SWWI8.0443-MUL - Technical data

1) If UWF (Unified Write Filter) is enabled, 2 GB RAM are recommended.
The specified memory size is a minimum requirement according to Microsoft. B&R recommends using at least 2 GB RAM with 32-bit operating systems, however.
2) The specified memory size is a minimum requirement according to Microsoft. B&R recommends using at least 4 GB RAM with 64-bit operating systems, however.
3) The specified minimum size of the data storage medium does not take into account the memory requirements of additional language packages.

7.4.3.4 Features

The feature list shows the most important device functions in Windows Embedded 8.1 Industry Pro.

Function	Windows Embedded 8.1 Industry Pro
Range of functions in Windows 8.1 Pro	✓
Internet Explorer 11 including Enterprise Mode	✓
Multi-touch support	✓
Multilingual support	Can be installed via Language Pack DVDs (default language is English)
Page file	Configurable (disabled by default in the image by the UWF)
Hibernate file	Configurable (disabled by default in the image)
System restore	Configurable (disabled by default in the image by the UWF)
SuperFetch	Configurable (disabled by default in the image by the UWF)
File indexing service	Configurable (disabled by default in the image by the UWF)
Fast boot	Configurable (disabled by default in the image by the UWF)
Defragmentation service	Configurable (disabled by default in the image by the UWF)
Additional embedded lockdown functions	
Assigned access	Configurable
Dialog box filter	Configurable
Embedded lockdown manager	✓
Keyboard Filter	Configurable
Shell Launcher	Configurable

Table 91: Device functions in Windows Embedded 8.1 Industry Pro

Function	Windows Embedded 8.1 Industry Pro
Toast notification filter	Configurable
USB filter	Configurable
Unified Write Filter	✓
Windows 8 application launcher	Configurable
Gesture filter	Configurable

Table 91: Device functions in Windows Embedded 8.1 Industry Pro

7.4.3.5 Installation

Windows Embedded 8.1 Industry Pro is preinstalled by B&R on a suitable data storage medium (32-bit: at least 16 GB, 64-bit: at least 20 GB). After the system is switched on for the first time, it runs through the out-of-box experience (OOBE), which allows different settings to be made (e.g. language, region, keyboard, computer name, username).

Information:

If entering the product key is required during the OOBE, this can be skipped by entering "SKIP".

7.4.3.6 Drivers

The operating system contains all drivers necessary for operation. If an older driver version is installed, the latest version can be downloaded and installed from the B&R website (www.br-automation.com). It is only important to ensure that "Unified Write Filter (UWF)" is disabled.

Information:

Necessary drivers must be downloaded from the B&R website, not from manufacturer websites.

7.4.3.7 Activation

Windows Embedded 8.1 Industry Pro must be activated in contrast to the previous versions Windows 7 and Windows XP Pro. This takes place at B&R.

The activation status can be checked in the Control Panel:

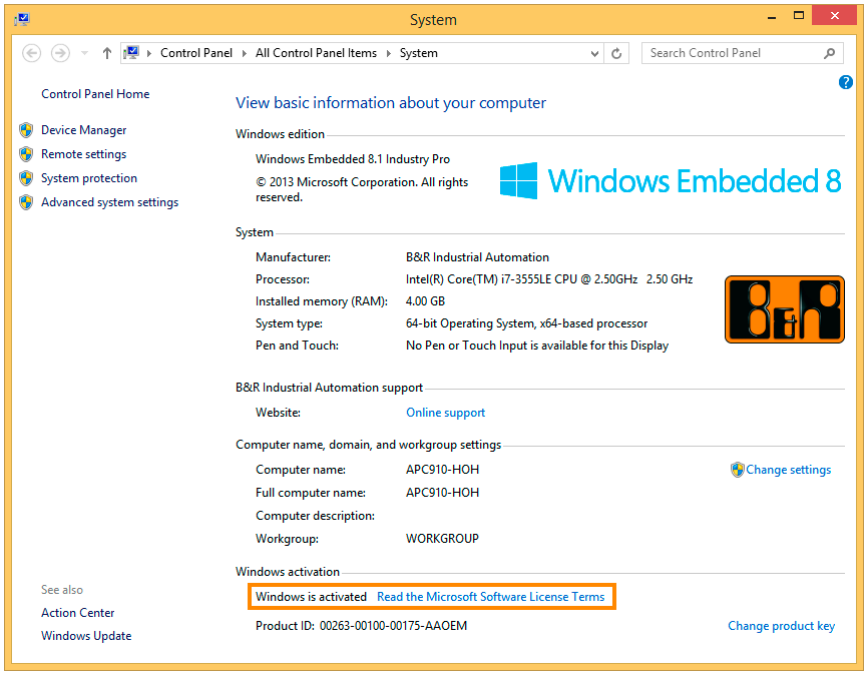

Information:

Activation may be lost if the hardware is changed (e.g. if components are replaced in case of repair) or if the system is reinstalled (e.g. with the recovery DVD).

In this case, a "watermark message" will always be shown on the screen:

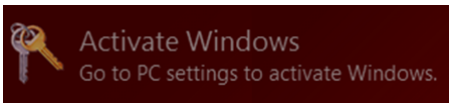

Windows Embedded 8.1 Industry Pro does not carry out any restarts or show any pop-up messages, which means that it is fully functional at all times. Only "personalizations" (e.g. setting the desktop background image) cannot be carried out.

The product can be activated at a later time either over the phone or via the Internet. Instructions are available on the Microsoft website.

Activation via direct Internet connection:
http://msdn.microsoft.com/en-us/library/dn449258(v=winembedded.82).aspx
Activation by telephone:
http://msdn.microsoft.com/en-us/library/dn449379(v=winembedded.82).aspx

Information:

Entering a product key is not required for a new activation in any case.

7.4.3.8 Content of delivery of the recovery DVD.

DVDs with order numbers 5SWWI8.0100-MUL and 5SWWI8.0200-MUL are only for recovery purposes.

Information:

This only performs the basic installation of a Windows Embedded 8.1 Industry Pro. In contrast to the preinstalled operating system versions, the operating system does not include device-specific drivers (network, graphics, ADI, etc.) or optimized settings, nor is it activated! The product can be activated at a later time either over the phone or via the Internet (see "Activation").

7.4.3.9 Lockdown features

The lockdown functions in Windows Embedded 8.1 Industry Pro make it possible to individually configure the device while making the system more secure at the same time. Among other things, they include:

- Unified Write Filter (UWF):
  This allows a data storage medium (e.g. CFast card) to be configured for read-only access, for example, and only certain registry keys can be accessed. As a result, the system always starts with the same configuration after rebooting.
- Dialog box filter:
  This can be used to suppress pop-up windows and dialog boxes. Such dialog boxes can occur, for example, if virus scanners are updated, network connections fail or the Windows Security Center shows warnings. These dialog boxes are simply hidden.
- Keyboard Filter:
  This allows individual keys or key combinations to be locked, e.g. so that the user cannot access the Task Manager.

For further information about the lockdown functions, see the Microsoft website:
http://msdn.microsoft.com/en-us/library/dn449278(v=winembedded.82).aspx

7.4.3.10 Supported display resolutions

Per Microsoft requirements, Windows Embedded 8.1 Industry Pro requires XGA resolution (1024 x 768) or higher to enable full operation of the Windows user interface (including system dialog boxes, apps, etc.). A lower resolution can be selected for applications.

7.4.4 Windows 7

7.4.4.1 General information

> **Information:**
>
> **Discontinuation of support for Windows 7 by Microsoft:**
>
> **After January 14, 2020, Microsoft will no longer be providing any security updates, hotfixes, support (free or paid) or technical resources for Windows 7.**

Windows 7 offers a variety of innovative features and performance enhancements. The 64-bit variants make full use of the current PC infrastructure. Faster switching to sleep mode, quicker restores, less memory usage and high-speed detection of USB devices are just a few of the advantages provided by Windows 7. Both English and German are available in Windows 7 Professional, while Windows 7 Ultimate supports up to 35 different languages (up to 36 languages in Service Pack 1). Product activation is not required for use on B&R PCs, which is a great advantage for simple logistical processes in the area of machine automation.

All Windows operating systems offered by B&R are from the Microsoft Embedded division. This means considerably longer availability compared to the consumer market.

7.4.4.2 Order data

Order number	Short description	Figure
	Windows 7 Professional/Ultimate	
5SWWI7.1100-GER	Windows 7 Professional SP1 - 32-bit - German - DVD	
5SWWI7.1100-ENG	Windows 7 Professional SP1 - 32-bit - English - DVD	
5SWWI7.1200-GER	Windows 7 Professional SP1 - 64-bit - German - DVD	
5SWWI7.1200-ENG	Windows 7 Professional SP1 - 64-bit - English - DVD	
5SWWI7.1300-MUL	Windows 7 Ultimate SP1 - 32-bit - Multilingual - DVD	
5SWWI7.1400-MUL	Windows 7 Ultimate SP1 - 64-bit - Multilingual - DVD	

7.4.4.3 Overview

Order number	5SWWI7.1100-GER	5SWWI7.1100-ENG	5SWWI7.1200-GER	5SWWI7.1200-ENG	5SWWI7.1300-MUL	5SWWI7.1400-MUL
Operating system						
Target systems						
Industrial PC	APC510 APC511 APC810 APC910 APC2100 PPC800 PPC900 PPC2100 PP500		APC810 APC910 APC2100 PPC800 PPC900 PPC2100		APC510 APC511 APC810 APC910 APC2100 PPC800 PPC900 PPC2100 PP500	APC810 APC910 APC2100 PPC800 PPC900 PPC2100
Chipset	945GME GM45 QM77/HM76 NM10 US15W Bay Trail		945GME GM45 QM77/HM76 QM170/HM170/CM236 Bay Trail		945GME GM45 QM77/HM76 NM10 US15W Bay Trail	945GME GM45 QM77/HM76 QM170/ HM170/CM236 Bay Trail
Edition	Professional				Ultimate	
Architecture	32-bit		64-bit		32-bit	64-bit
Service pack	SP1					
Language	German	English	German	English	Multilingual	
Minimum size of RAM	1 GB [1]		2 GB [2]		1 GB [1]	2 GB [2]
Required storage space on data storage medium	16 GB		20 GB		16 GB [3]	20 GB [3]

Table 93: Windows 7 - Overview

1) The specified memory size is a minimum requirement according to Microsoft. B&R recommends using at least 2 GB RAM with 32-bit operating systems, however.
2) The specified memory size is a minimum requirement according to Microsoft. B&R recommends using at least 4 GB RAM with 64-bit operating systems, however.
3) The memory space required by additional language packs is not taken into account in the minimum size for the data storage medium.

7.4.4.4 Installation

Windows 7 is preinstalled by B&R on the desired data storage medium (e.g. CFast card). All necessary drivers (graphics, network, etc.) for operation are also installed.

7.4.4.5 Drivers

Current drivers for all approved operating systems are available for download in the Downloads section of the B&R website (www.br-automation.com).

> **Information:**
>
> **Necessary drivers must be downloaded from the B&R website, not from manufacturer websites.**

7.4.4.6 Characteristics, limitations

- Beep.sys no longer exists in Windows 7; therefore, an acoustic signal (e.g. when a button is pressed) can no longer be heard.
- Determining the Windows 7 system assessment (system classification) is currently not supported (this does not apply to PP500, APC2100, APC510, APC511, APC910, PPC2100 and PPC800 with NM10 chipset).

7.4.4.7 Supported display resolutions

Per Microsoft requirements, Windows 7 requires XGA resolution (1024 x 768) or higher to enable full operation of the Windows user interface (including system dialog boxes, etc.). A lower resolution can be selected for applications.

7.4.5 Windows Embedded Standard 7

7.4.5.1 General information

> **Information:**
>
> **Discontinuation of support for Windows Embedded Standard 7 by Microsoft:**
>
> **After October 13, 2020, Microsoft will no longer be providing any security updates, hotfixes, support (free or paid) or technical resources for Windows Embedded Standard 7.**

The successor variant to Windows XP Embedded is Windows Embedded Standard 7. As with previous versions, the embedded operating system offers full system support for B&R industrial PCs. In addition to new features that are also included in Windows 7 Professional, Windows Embedded Standard 7 includes embedded components such as Enhanced Write Filter, File-Based Write Filter, Registry Filter and USB boot. Windows Embedded Standard 7 is available in two versions. The main difference is the ability to execute in multiple languages. Windows Embedded Standard 7 is only available in a single language, whereas Windows Embedded Standard 7 Premium supports the installation of several languages simultaneously.

With Windows Embedded Standard 7, Microsoft has made substantial improvements in the area of security. The AppLocker program, available in the premium variant, can prevent the execution of unknown or potentially undesired applications that are being installed over a network or from drives that are directly connected. A tiered approach allows the differentiation between scripts (.ps1, .bat, .cmd, .vbs and .js), installation files (.msi, .msp) and libraries (.dll, .ocx). AppLocker can also be configured to record undesired activity and display it in the Event Viewer. Windows Embedded Standard 7 is available in both 32-bit and 64-bit versions (64-bit versions are not supported by all systems). As a result, even demanding applications based on 64-bit technology are supported.

7.4.5.2 Order data

Order number	Short description	Figure
	Windows Embedded Standard 7	
5SWWI7.1543-ENG	Windows Embedded Standard 7 SP1 - 32-bit - Service Pack 1 - English - PPC2100 - License (without Recovery DVD) - Only available with a new device	
5SWWI7.1643-ENG	Windows Embedded Standard 7 SP1 - 64-bit - Service Pack 1 - English - PPC2100 - License (without Recovery DVD) - Only available with a new device	
5SWWI7.1743-MUL	Windows Embedded Standard 7 Premium SP1 - 32-bit - Service Pack 1 - English - PPC2100 - License (without Recovery DVD) - Only available with a new device	
5SWWI7.1843-MUL	Windows Embedded Standard 7 Premium SP1 - 64-bit - Service Pack 1 - English - PPC2100 - License (without Recovery DVD) - Only available with a new device	
	Optional accessories	
	Windows Embedded Standard 7	
5SWWI7.1900-MUL	Windows Embedded Standard 7 SP1 - 32-bit - Language Pack DVD	
5SWWI7.2000-MUL	Windows Embedded Standard 7 SP1 - 64-bit - Language Pack DVD	

Table 94: 5SWWI7.1543-ENG, 5SWWI7.1643-ENG, 5SWWI7.1743-MUL, 5SWWI7.1843-MUL - Order data

7.4.5.3 Overview

Order number	5SWWI7.1543-ENG	5SWWI7.1643-ENG	5SWWI7.1743-MUL	5SWWI7.1843-MUL
Operating system				
Target systems				
Industrial PC	PPC2100			
Chipset	Bay Trail			
Edition	Embedded		Premium	
Architecture	32-bit	64-bit	32-bit	64-bit
Service pack	SP1			
Language	English		Multilingual	
Minimum size of RAM	1 GB [1]	2 GB [2]	1 GB [1]	2 GB [2]
Minimum size of data storage medium	16 GB		16 GB [3]	

Table 95: 5SWWI7.1543-ENG, 5SWWI7.1643-ENG, 5SWWI7.1743-MUL, 5SWWI7.1843-MUL - Technical data

1) The specified memory size is a minimum requirement according to Microsoft. B&R recommends using at least 2 GB RAM with 32-bit operating systems, however.
2) The specified memory size is a minimum requirement according to Microsoft. B&R recommends using at least 4 GB RAM with 64-bit operating systems, however.
3) The memory space required by additional language packs is not taken into account in the minimum size for the data storage medium.

7.4.5.4 Features

The feature list shows the most important device functions in Windows Embedded Standard 7.

Function	Windows Embedded Standard 7	Windows Embedded Standard 7 Premium
Enhanced Write Filter (EWF)	✓	✓
File Based Write Filter (FBWF)	✓	✓
Administrator account	✓	✓
User account	Configurable	Configurable
Windows Explorer shell	✓	✓
Registry filter	✓	✓
Internet Explorer 11.0	✓	✓
Internet Information Service (IIS) 7.0	✓	✓
Anti-malware (Windows Defender)	-	✓
Add-ons (Snipping Tool, Sticky Notes)	-	✓
Windows firewall	✓	✓
.NET Framework 3.5	✓	✓
32-bit and 64-bit support	✓	✓
Remote Desktop Protocol 7.0	✓	✓
File compression utility	✓	✓
Windows Installer service	✓	✓
Windows XP mode	-	-
Media Player 12	✓	✓
DirectX	✓	✓
Multilingual user interface packs in the same image	-	✓
International components and language services	✓	✓
Language pack installer	✓	✓
Windows Update	Configurable	Configurable
Windows PowerShell 2.0	✓	✓
BitLocker	-	✓
AppLocker	-	✓
Tablet PC support	-	✓
Multi-touch support	-	✓
Boot from USB stick	✓	✓
Accessories	✓	✓
Page file	Configurable	Configurable
Number of fonts	134	134

Table 96: Device functions in Windows Embedded Standard 7

7.4.5.5 Installation

Windows Embedded Standard 7 is preinstalled by B&R on a suitable CFast card (32-bit: at least 16 GB, 64-bit: at least 16 GB). After the system is switched on for the first time, it is configured automatically. This procedure takes approx. 30 minutes, and the device will be automatically rebooted a number of times.

> **Information:**
>
> **If the EWF (Enhanced Write Filter) should be used, all mass storage devices (except the boot drive) must be removed from the system during setup or SYSPREP. Alternatively, the additional mass storage devices can also be disabled in BIOS.**

7.4.5.6 Drivers

The operating system contains all drivers necessary for operation. If an older driver version is installed, the latest version can be downloaded and installed from the B&R website (www.br-automation.com). It is only important to ensure that "Enhanced Write Filter (EWF)" is disabled.

7.4.5.7 Characteristics, limitations

7.4.5.8 Supported display resolutions

Per Microsoft requirements, Windows Embedded Standard 7 requires XGA resolution (1024 x 768) or higher to enable full operation of the Windows user interface (including system dialog boxes, etc.). A lower resolution can be selected for applications.

7.4.6 Automation Runtime

7.4.6.1 General information

The real-time operating system Automation Runtime is an integral part of Automation Studio. This real-time operating system forms the software core for running applications on a target system.

- Guarantees the highest possible performance of the hardware being used
- Runs on all B&R target systems
- Makes the application hardware-independent
- Easy portability of applications between B&R target systems
- Guaranteed determinism through cyclic system
- Configurable jitter tolerance in all task classes
- Support for all relevant programming languages, such as IEC 61131-3 languages and C
- Rich function library per IEC 61131-3 as well as the extended B&R automation library
- Integrated in Automation NET. Access to all networks and bus systems via function calls or by configuration in Automation Studio

B&R Automation Runtime is fully embedded in the corresponding target system (hardware on which Automation Runtime is installed). It thus enables application programs to access I/O systems (also via the fieldbus) and other devices such as interfaces and networks.

7.4.6.2 Order data

Order number	Short description	Figure
	Technology Guard	
0TG1000.01	Technology Guard (MSD)	
0TG1000.02	Technology Guard (HID)	
1TG4600.10-5	Automation Runtime Windows TG license	
1TG4601.06-5	Automation Runtime Embedded, TG license	
1TG4601.06-T	Automation Runtime Embedded Terminal TG license	

7.4.6.3 Automation Runtime Windows (ARwin)

The following software versions (or higher) are required to operate Automation Runtime Windows on a Panel PC 2100:

- ARwin upgrade AR K4.10
- ARwin upgrade AR N4.10 for 5PPC2100.BY48-002
- Automation Studio V4.2.5
- Technology Guard

Information:

In order to use Automation Runtime Windows (ARwin), BIOS setting *Advanced - OEM features - Miscellaneous configuration - Realtime environment* must be set to *Enabled*.

Information:

To slightly improve the real-time behavior (jitter) of Automation Runtime Windows (ARwin) with a graphics-heavy application, BIOS settings *Advanced - Graphics (IGD) configuration - IGD turbo* and *Advanced - Graphics (IGD) configuration - RC6 (render standby)*[4] can be set to *Disabled*.

If the BIOS setting *Advanced - Graphics (IGD) Configuration - IGD Turbo* is set to *Disabled*, the graphics performance of the system is noticeably reduced.

[4] For BIOS versions 1.40 and later: *RC6 (render standby)* is automatically disabled when *Realtime environment* is enabled.

7.4.6.4 Automation Runtime Embedded (ARemb)

The following software versions (or higher) are required to operate Automation Runtime Embedded on a Panel PC 2100:

- ARemb upgrade AR K4.10
- ARemb upgrade AR N4.10 for 5PPC2100.BY48-002
- Automation Studio V4.2.5
- Technology Guard

PVI Development Setup must be obtained separately from the B&R website (www.br-automation.com) and installed!

Information:

In order to use Automation Runtime Embedded (ARemb), BIOS setting *Advanced - OEM features - Miscellaneous configuration - Realtime environment* must be set to *Enabled*.

Information:

To slightly improve the real-time behavior (jitter) of Automation Runtime Windows (ARwin) with a graphics-heavy application, BIOS settings *Advanced - Graphics (IGD) configuration - IGD turbo* and *Advanced - Graphics (IGD) configuration - RC6 (render standby)*[5] can be set to *Disabled*.

If the BIOS setting *Advanced - Graphics (IGD) Configuration - IGD Turbo* is set to *Disabled*, the graphics performance of the system is noticeably reduced.

7.4.6.5 Technology Guarding

Technology Guarding is license protection used for individual software components. The "Technology Guard" (dongle) serves as the license container; this is connected to an available USB interface on the target system.

B&R Automation Runtime software components are subject to licensing. The use of the Technology Guard is mandatory if these components have not been selected as a software package.

Information:

Licensing using the Technology Guarding wizard is available starting with Automation Studio V4.1 and Automation Runtime V4.08. A Technology Guard is not necessary in earlier Automation Runtime versions.

For additional information about Technology Guarding, see Automation Help.

[5] For BIOS versions 1.40 and later: *RC6 (render standby)* is automatically disabled when *Realtime environment* is enabled.

7.4.7 B&R Hypervisor

B&R Hypervisor allows multiple operating systems to operate simultaneously on a single device. The operating systems can communicate with each other via a virtual network.

Intelligent distribution of CPU resources

B&R Hypervisor allows Windows or Linux to run simultaneously with Automation Runtime. This makes it possible to combine a controller and HMI PC in one device. With B&R Hypervisor, an industrial PC can also be used as an edge controller. This serves as a controller and simultaneously transmits pre-processed data to higher-level systems in the cloud via OPC UA.

Virtual network

The hypervisor provides a virtual network connection that allows applications to exchange data between operating systems. Similar to an ordinary Ethernet interface, standard network protocols are used. In place of a cable, there is a reserved memory area that is not allocated to either operating system.

Maximum flexibility

The user configures the hypervisor and allocates hardware resources in the B&R Automation Studio software development environment. The system configurations are determined individually. This makes the assignment of resources to the respective operating system flexible. Whereas previous simultaneous solutions were tailored to a specific Windows version, B&R Hypervisor is completely independent of the version of the operating systems used.

System requirements

The following minimum software versions are required to operate B&R Hypervisor on the Panel PC 2100 :

- ARemb upgrade AR F4.44
- Automation Studio V4.4
- PPC2100 BIOS V1.40
- PPC2100 MTCX V1.13

Information:

To operate B&R Hypervisor, settings *Advanced - Miscellaneous configuration - Realtime environment* and *Hypervisor environment* must be set to *Enabled*.

Information:

For detailed information, see Automation Help or the B&R website (www.br-automation.com).

7.4.8 mapp Technology

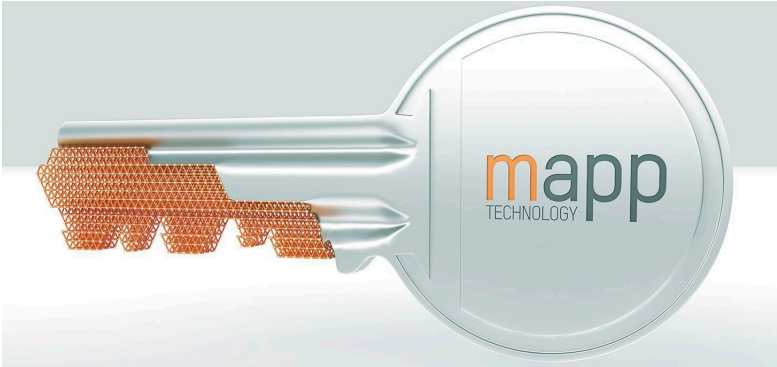

mapp is revolutionizing the creation of software for industrial machinery and equipment. mapp components – mapps for short – are as easy to use as smartphone apps. Rather than write lines and lines of code to build a user management system, alarm system or motion control sequence from the ground up, developers of machine software simply configure the ready-made mapps with a few clicks of the mouse. Complex algorithms are easy to master. Programmers can focus entirely on the machine process.

Information:

For detailed information, see Automation Help or the B&R website (www.br-automation.com).

7.4.9 B&R Linux 8 (GNU/Linux)

7.4.9.1 General information

Linux or GNU/Linux are usually free, UNIX-like multi-user operating systems based on the Linux kernel and fundamentally on GNU software. Wide (also commercial) distribution was made possible starting in 1992 by licensing the Linux kernel under the GPL.

The Linux version created by B&R is based on Debian 8. It already contains all the drivers required for the respective device and can therefore be used immediately without any additional effort.

Advantages of Debian:

- High stability
- Large package selection

For more information about Debian, see http://www.debian.org.

7.4.9.2 Order data

Order number	Short description	Figure
	B&R Linux 8	
5SWLIN.0543-MUL	B&R Linux 8 - 32-bit - Multilingual - PPC2100 chipset Bay Trail - Installation (without Recovery DVD) - Only available with a new device	
5SWLIN.0643-MUL	B&R Linux 8 - 64-bit - Multilingual - PPC2100 chipset Bay Trail - Installation (without Recovery DVD) - Only available with a new device	
	Optional accessories	
	CFast cards	
5CFAST.016G-00	CFast 16 GB SLC	
5CFAST.032G-00	CFast 32 GB SLC	
5CFAST.032G-10	CFast 32 GB MLC	
5CFAST.064G-10	CFast 64 GB MLC	
5CFAST.128G-10	CFast 128 GB MLC	
5CFAST.4096-00	CFast 4 GB SLC	
5CFAST.8192-00	CFast 8 GB SLC	

7.4.9.3 Overview

Order number	5SWLIN.0543-MUL	5SWLIN.0643-MUL
Operating system		
Target systems		
Industrial PC	PPC2100	
Chipset	Bay Trail	
Architecture	32-bit	64-bit
Language	Multilingual	
Minimum size of RAM	1 GB	
Minimum size of data storage medium	4 GB	

7.4.9.4 Features

- LXDE desktop
- Touch screen driver
- MTCX driver
- ADI library
- HMI diagnostics tool
- Tool for right-click support via touch screen
- Virtual keyboard

Detailed instructions about B&R Linux 8 for B&R devices can be downloaded from the Downloads section of the B&R website (www.br-automation.com).

7.4.9.5 Installation

B&R Linux 8 is preinstalled by B&R on the required data storage medium (e.g. CFast card). All necessary drivers (graphics, network, etc.) for operation are also installed.

Debian 8 can also be downloaded from the Debian website (http://www.debian.org) and installed separately. Instructions are also available on the Debian website.

Notes regarding special features of installation on B&R devices are described in a separate document that can be downloaded from the B&R website (www.br-automation.com).

Installation packages are available for the necessary B&R adjustments; these can also be downloaded from the B&R website (www.br-automation.com).

7.4.9.6 Drivers

The operating system contains all drivers necessary for operation.

The current version of B&R-specific drivers can be downloaded and installed from the B&R website (www.br-automation.com).

7.4.10 B&R Linux 9 (GNU/Linux)

7.4.10.1 General information

B&R supports Linux in the form of modified images based on Debian GNU / Linux 9 ("Stretch").

With B&R Linux, B&R offers a variant of Debian optimized for B&R industrial PCs that already includes all B&R-specific modifications and offers the broadest possible basis for various applications.

Reasons for Debian:

- High stability
- Large package selection
- Wide distribution of Debian and various derivatives (e.g. Ubuntu, Linux Mint)

For additional information, see the Debian website (https://www.debian.org/).

> **Information:**
>
> **For detailed information, see the user's manual of the operating system. This is available for download on the B&R website (www.br-automation.com).**

7.4.10.2 Order data

Order number	Short description	Figure
	B&R Linux 9	
5SWLIN.0743-MUL	B&R Linux 9 - 64-bit - Multilingual - PPC2100 chipset Bay Trail - Installation (without Recovery DVD) - Only available with a new device	
	Optional accessories	
	CFast cards	
5CFAST.016G-00	CFast 16 GB SLC	
5CFAST.032G-00	CFast 32 GB SLC	
5CFAST.032G-10	CFast 32 GB MLC	
5CFAST.064G-10	CFast 64 GB MLC	
5CFAST.128G-10	CFast 128 GB MLC	
5CFAST.256G-10	CFast 256 GB MLC	
5CFAST.4096-00	CFast 4 GB SLC	
5CFAST.8192-00	CFast 8 GB SLC	

7.4.10.3 Overview

Order number	5SWLIN.0743-MUL
Operating system	
Target systems	
Industrial PC	PPC2100
Chipset	Bay Trail
Architecture	64-bit
Language	Multilingual
Minimum size of RAM	1 GB
Minimum size of data storage medium	4 GB

7.4.10.4 Features

- LXDE desktop
- Touch screen support
- MTCX driver
- ADI library
- Tool for right-click support via touch screen
- Virtual keyboard

Detailed instructions about B&R Linux 9 for B&R devices can be downloaded from the Downloads section of the B&R website (www.br-automation.com).

7.4.10.5 Installation

B&R Linux 9 is preinstalled at B&R on the desired data storage medium (e. g. CFast card).

7.4.10.6 Drivers

Current drivers for all approved operating systems are available for download in the Downloads section of the B&R website (www.br-automation.com).

> **Information:**
>
> **Necessary drivers must be downloaded from the B&R website, not from manufacturer websites.**

7.5 Automation Device Interface (ADI)

7.5.1 ADI Control Center

The settings of B&R devices can be read out and changed in Windows using the ADI Control Center in the Control Panel. The figure shown is a symbolic image; the representation may vary depending on the device.

> **Information:**
>
> **The displayed temperature and voltage values (e.g. CPU temperature, core voltage, battery voltage) represent uncalibrated information values. No conclusions about possible alarms or hardware malfunctions can be drawn from this. The hardware components used have automatic diagnostic functions in the event of error.**

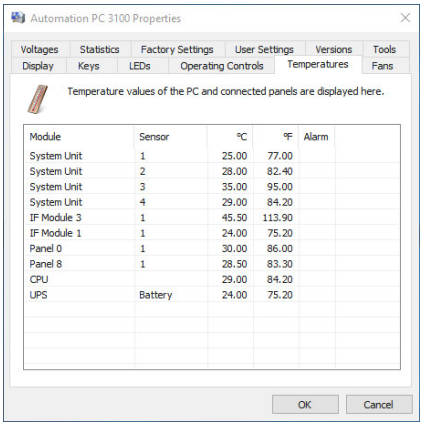

Figure 8: ADI Control Center screenshots - Examples

7.5.1.1 Functions

The ADI Control Center offers the following functions, for example:

- Changing display-specific parameters
- Reading out device-specific keys
- Updating the key configuration
- Testing keys or device-specific LEDs of a membrane keypad
- Reading out or calibrating control devices (e.g. key switch, handwheel, joystick, potentiometer)
- Reading out temperatures, fan speeds, switch positions and statistical data
- Reading out operating hours (power-on hours)
- Reading user settings and factory settings
- Reading out software versions
- Updating and backing up BIOS and firmware
- Creating reports for the current system (support)
- Setting the SDL equalizer value for the SDL cable adjustment
- Changing the user serial ID

For a detailed description, see the user documentation for the ADI driver.

> **Information:**
>
> **The functions available in the ADI Control Center depend on the device family.**

7.5.1.2 Installation

The ADI driver is included in most B&R Windows operating systems or can be installed on request.

The ADI driver (also includes the ADI Control Center) and user documentation can be downloaded at no cost from the Downloads section of the B&R website (www.br-automation.com). If a more recent version is available, it can be installed later.

> **Information:**
>
> **The *Write filter* must be disabled during installation.**

7.5.2 ADI Development Kit

This software allows *ADI* functions to be accessed from Windows applications created with Microsoft Visual Studio, for example:

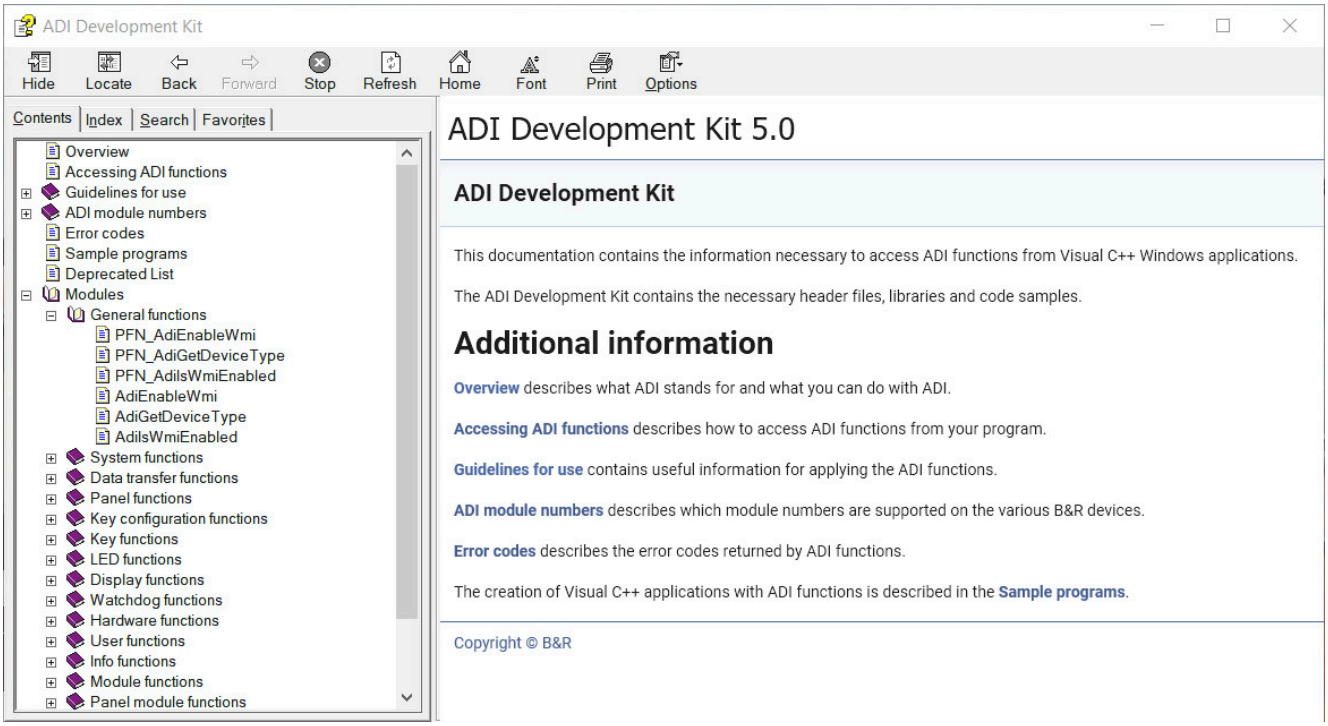

Figure 9: ADI Development Kit screenshots

Features:

- Header files and import libraries
- Help files
- Example projects
- ADI DLL: For testing applications if no ADI driver is installed.

The appropriate ADI driver must be installed for the device. The ADI driver is already included in B&R images of embedded operating systems.

For a detailed description of how to use ADI functions, see Automation Help.

The ADI Development Kit can be downloaded at no cost from the Downloads section of the B&R website (www.br-automation.com).

7.5.3 ADI .NET SDK

This software allows *ADI* functions to be accessed from .NET applications created with Microsoft Visual Studio.

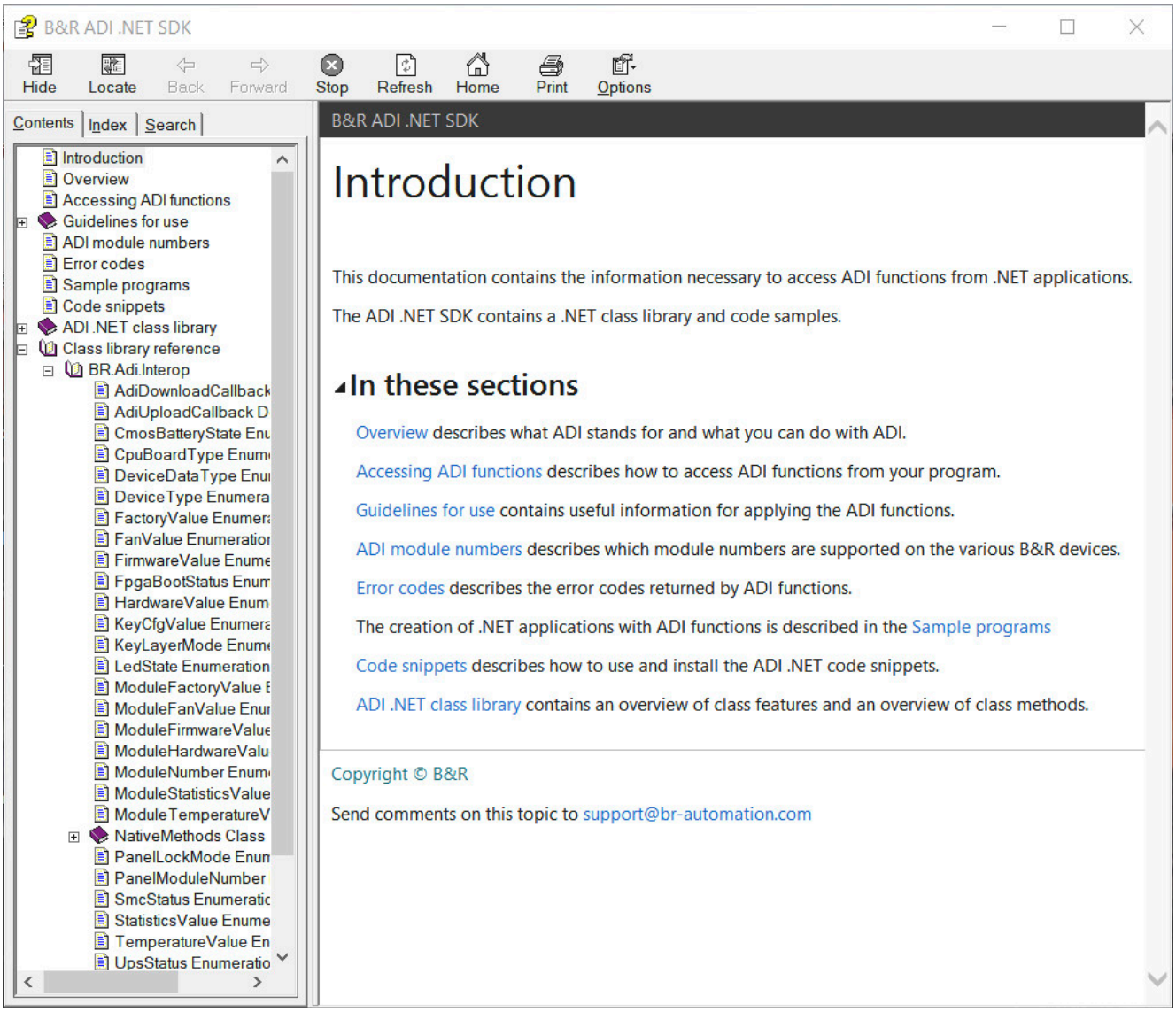

Figure 10: ADI .NET SDK screenshots

Features:

- ADI .NET class library
- Help files (in English)
- Sample projects and code snippets
- ADI DLL: For testing applications if no ADI driver is installed.

The appropriate ADI driver must be installed for the device. The ADI driver is already included in B&R images of embedded operating systems.

For a detailed description of how to use ADI functions, see Automation Help.

The ADI .NET SDK can be downloaded at no cost from the Downloads section of the B&R website (www.br-automation.com).

7.6 Key Editor

A frequently occurring requirement for panels is adapting function keys and LEDs to the application software. With the Key Editor, individual adaptation to the application is possible quickly and easily.

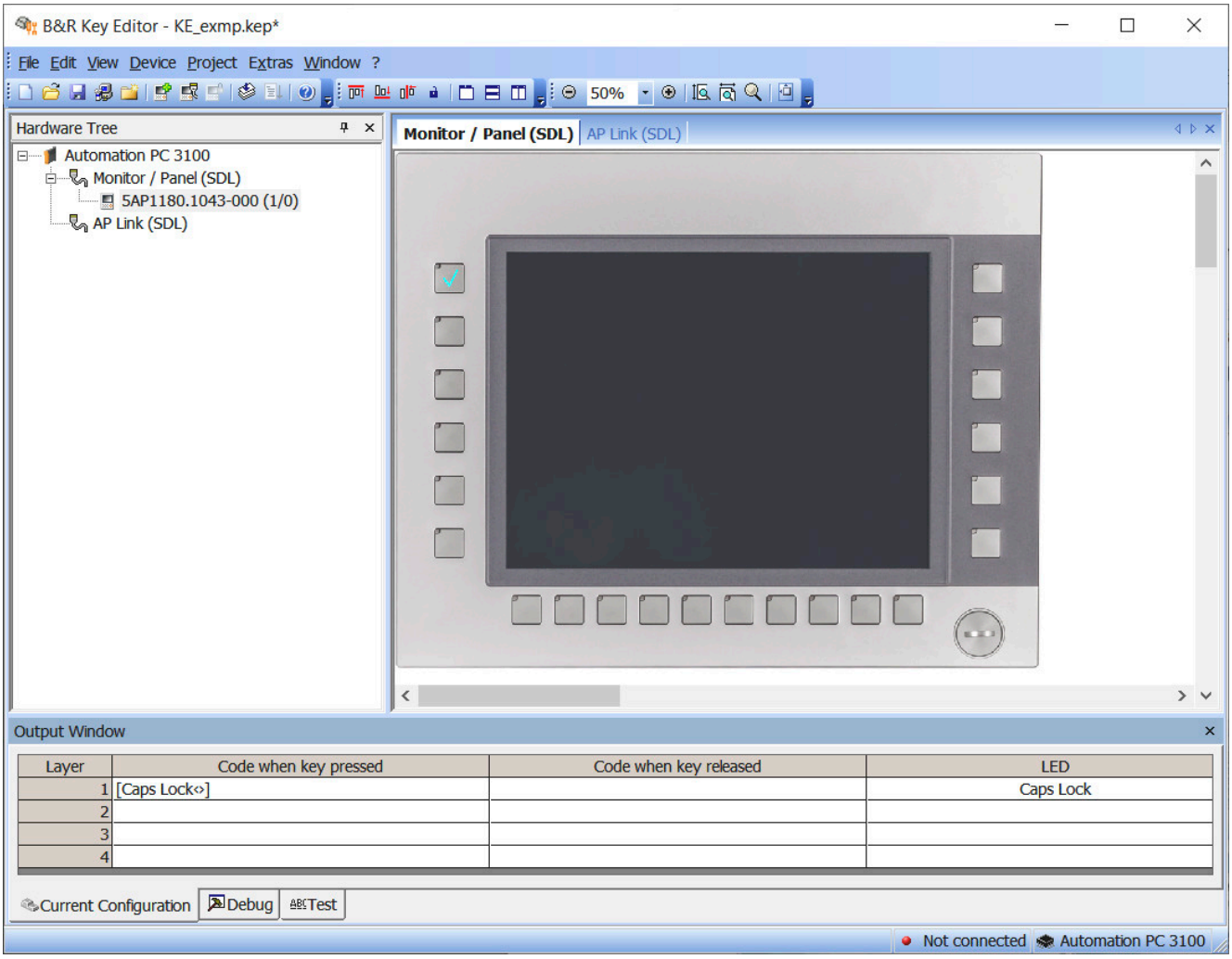

Features:

- Configuration of normal keys like on a keyboard (A, B, C, etc.)
- Keyboard shortcuts (CTRL+C, SHIFT+DEL, etc.) on one key
- Special key functions (change brightness, etc.)
- Assignment of LED functions (HDD access, power, etc.)
- 4 assignments possible per key (using layers)
- Configuration of the panel lock time when connecting several Automation Panel devices to Automation PCs and Panel PCs

For detailed instructions about configuring keys and LEDs and installing the key configuration on the target system, see the help documentation for the Key Editor. The Key Editor and help documentation can be downloaded at no cost from the Downloads section of the B&R website (www.br-automation.com).

7.7 KCF Editor

The KCF Editor can be used as a simple alternative to the Key Editor. It can also be used to adapt function keys and LEDs to the application software. In contrast to the Key Editor, operation does not take place using a graphical representation of the device, but via a simple Windows dialog box. The KCF Editor can therefore also be used for devices that are not yet supported in the Key Editor. The KCF Editor is a "portable" application and can be started directly from a USB flash drive without installation on the target device, for example.

An installed ADI driver is required for the full range of functions.

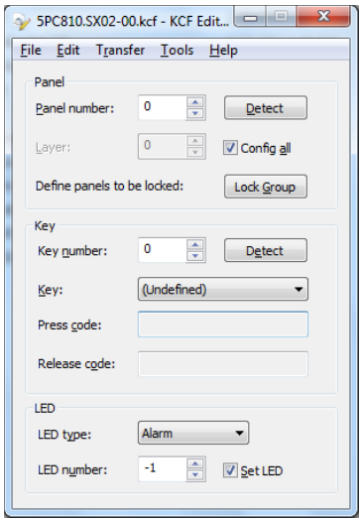

Figure 11: B&R KCF Editor version 1.0 screenshot

Features:

- Configuration of normal keys like on a keyboard (A, B, C, etc.)
- Special key functions (change brightness, etc.)
- Assignment of LED functions (HDD access, power, etc.)
- 4 assignments possible per key (using layers)
- Configuration of the panel lock time when connecting several Automation Panel devices to B&R PCs.
- Export and import of the configuration (via INI files)
- Save configuration as report (text file)

If the KCF Editor is running on the target device and the ADI driver is installed, the following additional features are available:

- Panel and key detection
- LED test
- Download/Upload the configuration

For detailed instructions about configuring keys and LEDs and installing the key configuration on the target system, see the user documentation for the KCF editor. The KCF editor and user documentation can be downloaded at no cost from the Downloads section of the B&R website (www.br-automation.com).

7.8 HMI Service Center

7.8.1 5SWUTI.0001-000

7.8.1.1 General information

The HMI Service Center is software for testing B&R industrial PCs and Automation Panels. Testing covers different categories such as COM, network and SRAM.

The test system consists of a USB flash drive with installed Windows PE operating system and the HMI Service Center.

For details about the HMI Service Center, see the HMI Service Center user's manual. This can be downloaded at no cost from the B&R website (www.br-automation.com).

7.8.1.2 Order data

Order number	Short description	Figure
	Accessories	
5SWUTI.0001-000	HMI Service Center USB flash drive - Hardware diagnostic software - For APC910/PPC900 - For PPC1200 - For APC2100/PPC2100 - For APC2200/PPC2200 - For APC3100/PPC3100 - For APC mobile - For AP800/AP900 - For AP9x3/AP9xD - For AP1000/AP5000	

8 Maintenance

The following chapter describes the maintenance work that can be carried out by a qualified and trained end user.

> **Information:**
>
> **Only components approved by B&R are permitted to be used for maintenance work.**

8.1 Cleaning

> **Danger!**
>
> **In order to prevent unintentional operation (by touching the touch screen or keys), the device is only permitted to be cleaned when the power is switched off.**

- Use a cloth moistened with dishwashing detergent, screen cleaner or alcohol (ethanol) to clean the device.
- The cleaning agent is not permitted to be applied directly to the device.
  Abrasive cleaners, aggressive solvents and chemicals, compressed air or steam cleaners are not permitted to be used.

> **Information:**
>
> **Displays with a touch screen should be cleaned at regular intervals.**

8.2 User tips for increasing the service life of the display

8.2.1 Backlight

The service life of the backlight is specified by its "half-brightness time". An operating time of 50,000 hours would mean that the display brightness would still be 50% after this time.

8.2.1.1 Measures to maintain backlight service life

- The display brightness can be set to the lowest level that is comfortable for the user's eyes.
- Bright images should be avoided as far as possible.
- A 50% reduction in brightness can increase the half-brightness time by about 50%.

8.2.1.2 How can the service life of backlights be extended?

- Set the display brightness to the lowest value comfortable for the eyes.
- Use dark images.
- Reducing the brightness by 50% can increase the half-brightness time by approximately 50%.

8.2.2 Image persistence

Image persistence refers to the "burning in" of a static image on a display after being displayed for a long time. It does not only occur with static images, however. Image persistence is also referred to in the technical literature as screen burn-in, image retention, memory effect, memory sticking or ghost image.

There are 2 different types:

- Area type: This type can be seen in a dark gray image. The effect disappears if the display is switched off for a long time.
- Line type: This can result in permanent damage.

8.2.2.1 What causes image persistence?

- Static images
- No screensaver
- Sharp transitions in contrast (e.g. black/white)
- High ambient temperatures
- Operation outside of specifications

8.2.2.2 How can image persistence be reduced?

- Switch continuously between static and dynamic images.
- Prevent excessive differences in brightness between foreground and background elements.
- Use colors with similar brightness.
- Use complementary colors for subsequent images.
- Use screensavers.

8.3 Pixel errors

> **Information:**
>
> **Displays can contain faulty pixels (pixel errors) due to the manufacturing process. They are not grounds for initiating a complaint or warranty claim.**

8.4 Replacing CFast cards

Caution!

The CFast card is only permitted to be exchanged when the power is switched off!

Improper handling of the ejection lever (e.g. applying a large amount of force) can result in a defect in the ejector mechanism.

The CFast card can be exchanged quickly and easily by pressing the ejector (see figure) with a pointed object (e.g. ballpoint pen).

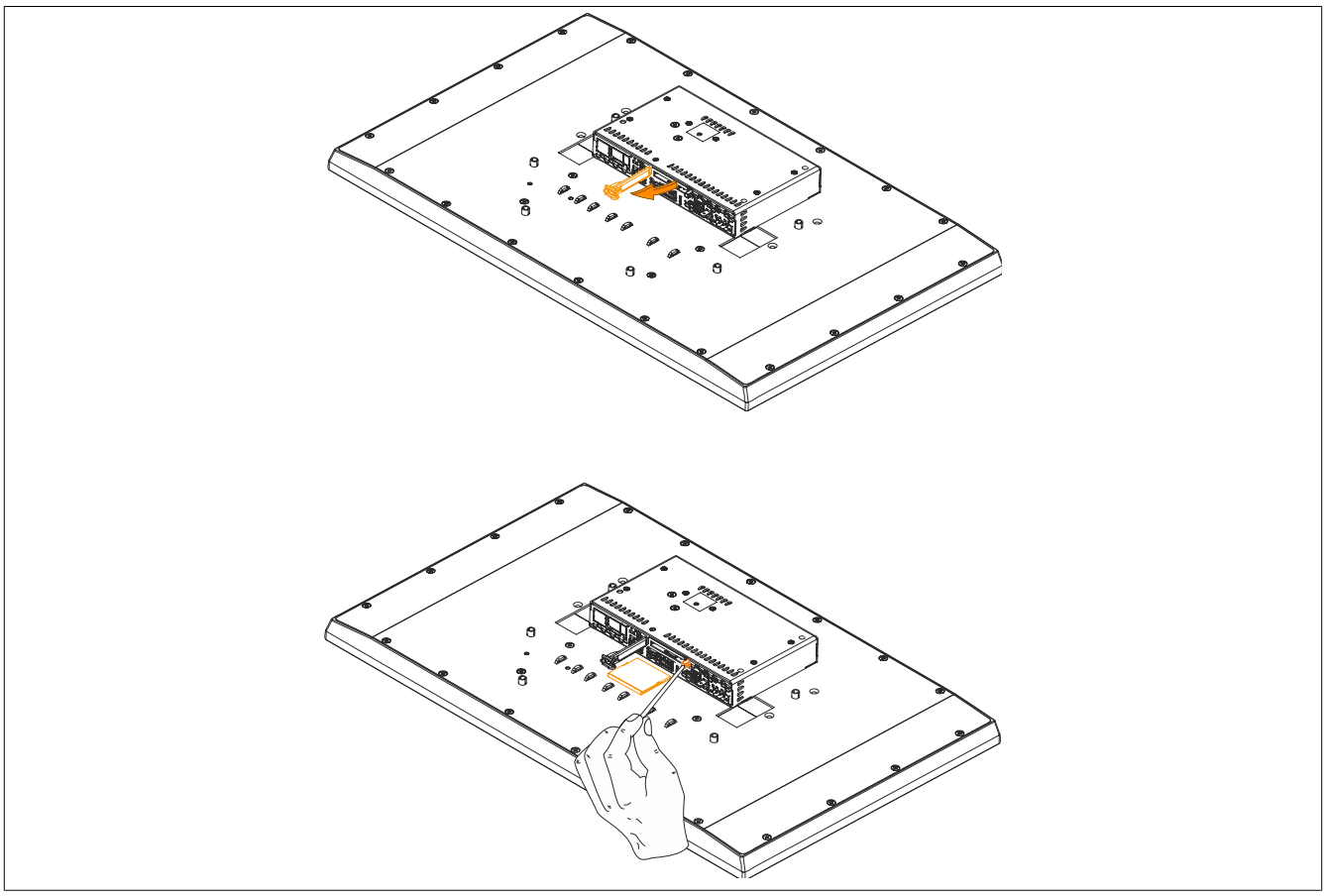

8.5 Repairs/Complaints and replacement parts

Danger!

Unauthorized opening or repair of a device may result in personal injury and/or serious damage to property. Repairs are therefore only permitted to be carried out by authorized qualified personnel at the manufacturer's premises.

To process a repair/complaint, a repair order or complaint must be created via the B&R Material Return Portal on the B&R website (www.br-automation.com).

9 International and national certifications

9.1 Directives and declarations

9.1.1 CE marking

All directives applicable to the respective product and their harmonized EN standards are met.

9.1.2 Radio Equipment Directive (RED)

These products meet the requirements of EU directive "Radio Equipment Directive 2014/53/EU" and are designed for industrial use:

EN 61131-2:2007	Programmable controllers - Part 2: Equipment requirements and tests
EN 61000-6-2:2005	Electromagnetic compatibility (EMC) - Part 6-2: Generic standards - Immunity for industrial environments
EN 61000-6-4:2007	Electromagnetic compatibility (EMC) - Part 6-4: Generic standards - Emission standard for industrial environments
EN 300 328 V2.2.2	Data transmission equipment operating in the 2.4 GHz ISM band and using wide band modulation techniques
EN 300 330 V2.1.1	Short range devices (SRD) - Radio equipment in the frequency range 9 kHz to 25 MHz and inductive loop systems in the frequency range 9 kHz to 30 MHz
EN 301 489-3 V2.1.1	Electromagnetic compatibility (EMC) standard for radio equipment and services - Part 3: Specific conditions for short-range devices (SRD) operating on frequencies between 9 kHz and 246 GHz
EN 301 489-17 V3.1.1	Electromagnetic compatibility (EMC) standard for radio equipment and services - Part 17: Specific conditions for broadband data transmission systems
EN 60950-1:2013	Information technology equipment - Safety - Part 1: General requirements
EN 62479:2010	Assessment of the compliance of low power electronic and electrical equipment with the basic restrictions related to human exposure to electromagnetic fields (10 MHz to 300 GHz)
EN 50364:2010	Limitation of human exposure to electromagnetic fields from devices operating in the frequency range 0 Hz to 300 GHz, used in electronic article surveillance (EAS), radio frequency identification (RFID) and similar applications
EN 62369-1:2010	Evaluation of human exposure to electromagnetic fields from short-range devices (SRDs) in various applications over the frequency range 0 GHz to 300 GHz - Part 1: Fields produced by devices used for electronic article surveillance, radio frequency identification and similar systems

9.1.3 EMC Directive

The products meet the requirements of EU directive "Electromagnetic compatibility 2014/30/EU" and are designed for industrial applications:

EN 61131-2:2007	Programmable controllers - Part 2: Equipment requirements and tests
EN 61000-6-2:2005	Electromagnetic compatibility (EMC) - Part 6-2: Generic standards - Immunity for industrial environments
EN 61000-6-4:2007	Electromagnetic compatibility (EMC) - Part 6-4: Generic standards - Emission standard for industrial environments

Information:

The declarations of conformity are available on the B&R website under Declarations of conformity.

9.2 Certifications

Danger!

A complete system can only receive certification if all individual components installed and connected in it have the corresponding certifications. If an individual component is used that does not have the corresponding certification, the complete system will also not be certified.

B&R products and services comply with applicable standards. These are international standards from organizations such as ISO, IEC and CENELEC, as well as national standards from organizations such as UL, CSA, FCC, VDE, ÖVE, etc. We pay special attention to the reliability of our products in the industrial sector.

Information:

The certifications valid for the respective product are available on the website and in the user's manual under the technical data in section "Certifications" or in the associated certificates.

9.2.1 UL certification

Ind. Cont. Eq.
E115267

Products with this mark are tested by Underwriters Laboratories and listed as "industrial control equipment". The mark is valid for the USA and Canada and facilitates the certification of your machines and systems in this economic area.

Underwriters Laboratories (UL) per standard UL 508
Canadian (CSA) standard per C22.2 no. 142-M1987

The UL certificates are available on the B&R website under Downloads - Certificates - UL.

9.2.2 EAC

Products with this mark are tested by an accredited test laboratory and permitted to be imported into the Eurasian Customs Union (based on EU conformity).

9.2.3 KC

Products with this mark are tested by an accredited test laboratory and permitted to be introduced into the Korean market (based on EU conformity).

9.2.4 RCM

Products with this mark are tested by an accredited test laboratory and certified by the ACMA. The mark is valid for Australia/Oceania and facilitates the certification of your machines and systems in this economic area (based on EU conformity).

9.3 Notes for the manual pursuant to radio approval

RF exposure statement

Complies with FCC and IC certifications

CE
conformity

Additional to the Low voltage and EMC directive the complete end-device must be conform to the radio equipment directive.

FCC and IC

B&R products satisfy EMC requirements for operation in the USA and Canada and are compliant with FCC and IC regulations. This has to be verified with every device in which this B&R wireless board “RFM-2-NF and RFM-3-BTW” should be installed. Corresponding "Radio Frequency Interference Statements" for the USA and Canada:

USA:
Federal Communications Commission (FCC)

This device complies with Part 15 of the FCC rules. Operation is subjected to the following two conditions: (1) this device may not cause harmful interference, and (2) this device must accept any interference received, including interference that may cause undesired operation.
Changes or modifications not expressly approved by the party responsible for compliance could void the user’s authority to operate the equipment.
NOTE: This equipment has been tested and found comply with the limits of Class A digital device, pursuant to part 15 of the FCC Rules. These limits are designed to provide reasonable protection against harmful interference in a commercial environment. This equipment generates, uses and can radiate radio frequency energy and, if not installed and used in accordance with the instructions, may cause harmful interference to radio communications. Operation of this equipment in a resident area is likely to cause harmful interference in which case the user will be required to correct the interference at his own expense.

Canada:
Industry Canada (IC)

L’émetteur/récepteur exempt de licence contenu dans le présent appareil est conforme aux CNR d’Innovation, Sciences et Développement économique Canada applicables aux appareils radio exempts de licence. L'exploitation est autorisée aux deux conditions suivantes : (1) l'appareil ne doit pas produire de brouillage, et (2) l'utilisateur de l'appareil doit accepter tout brouillage radioélectrique subi, même si le brouillage est susceptible d'en compromettre le fonctionnement.

L’émetteur/récepteur exempt de licence contenu dans le présent appareil est conforme aux CNR d’Innovation, Sciences et Développement économique Canada applicables aux appareils radio exempts de licence. L'exploitation est autorisée aux deux conditions suivantes : (1) l'appareil ne doit pas produire de brouillage, et (2) l'utilisateur de l'appareil doit accepter tout brouillage radioélectrique subi, même si le brouillage est susceptible d'en compromettre le fonctionnement.

Israel:
Ministry of Communications

מספר אישור התאמה אלחוטי של משרד התקשורת הוא 51-80526
.אסור להחליף את האנטנה המקורית של המכשיר ולא לעשות בו כל שינוי טכני אחר

México:
Instituto Federal de Telecomunicaciones (IFETEL)

La operación de este equipo está sujeta a las siguientes dos condiciones: (1) es posible que este equipo o dispositivo no cause interferencia perjudicial y (2) este equipo o dispositivo debe aceptar cualquier interferencia, incluyendo la que pueda causar su operación no deseada.

Taiwan:
根據NCC低功率電波輻射性電機管理辦法 規定:

第十二條: 經型式認證合格之低功率射頻電機，非經許可，公司、商號或使用者均不得擅自變更頻率、加大功率或變更原設計之特性及功能。
第十四條: 低功率射頻電機之使用不得影響飛航安全及干擾合法通信；經發現有干擾現象時，應立即停用，並改善至無干擾時方得繼續使用。 前項合法通信，指依電信法規定作業之無線電通信。 低功率射頻電機須忍受合法通信或工業、科學及醫療用電波輻射性電機設備之干擾。
此模組於取得認證後將依規定於模組本體標示審驗合格標籤，並要求平台廠商於平台上標示『內含發射器模組:

RFM-2-NF	RFM-3-BTW
CCAM19LP1280T1	CCAM19LP1270T1

Products with RFM-3-BTW and/or RFM-2-NF boards are approved for use in the USA and Canada. The types can be identified by an adhesive label bearing the appropriate marks - identifiable by the information "Contains FCC ID:" and "Contains IC:".

10 Accessories

The following accessories have undergone functional testing by B&R in connection with the device used and can be operated with this device. Possible limitations regarding operation with individual components other than the complete system must be taken into account, however. All individual specifications of the components must be observed when operating the complete system.

All components listed in this manual have undergone intensive system and compatibility testing and been approved accordingly. B&R cannot assume any functional warranty for accessories that have not been approved.

10.1 General accessories

The following accessories can be ordered for the Automation PC, Panel PC link modules and converters:

- Grounding clip

10.1.1 Accessories - Order data

Material number	Description
5ACCRHMI.0000-000	REP HMI grounding clip

10.2 Installation accessories

Suitable tool sets can be ordered to easily install B&R swing arm devices.

- Screwdriver with quick-change chuck
- Consisting of:

  5ACCRHMI.0007-000

  - 1x torque screwdriver: 0.3 to 1.2 Nm, ESD-protected
  - 1x torque wrench: 1 to 25 Nm
  - 1x bit set (6 pieces): Hex recess (3.0 mm, 5.0 mm), Torx (T10, T20, T25, T30)
  - 1x quick-change chuck for torque wrench

10.2.1 Order data

Order number	Short description	Figure
	Other	
5ACCRHMI.0007-000	HMI installation tool for swing arm: - 1x torque wrench ESD 0.3 - 1.2 Nm - 1x torque wrench 1.0 - 25.0 Nm - 1x hex-head bit 3.0, length 89 mm - 1x hex-head bit 5.0, length 89 mm - 1x Torx 10 bit, length 90 mm - 1x Torx 20 bit, length 89 mm - 1x Torx 25 bit, length 89 mm - 1x Torx 30 bit, length 89 mm - 1x quick-change chuck for torque wrench	

10.3 Terminal block power supply

10.3.1 0TB103.9x

10.3.1.1 General information

1-row 3-pin terminal block 0TB103 is used for the power supply.

10.3.1.2 Order data

Order number	Short description	Figure
	Accessories	
0TB103.9	Connector 24 VDC - 3-pin, female - Screw clamp terminal block 3.31 mm²	
0TB103.91	Connector 24 VDC - 3-pin, female - Cage clamp terminal block 3.31 mm²	

10.3.1.3 Technical data

Information:

The following specified characteristic data, features and limit values are only valid for this accessory and may differ from those of the complete system. The data specified for the complete system applies to the complete system in which this accessory is installed, for example.

Order number	0TB103.9	0TB103.91
General information		
Certifications		
CE	Yes	
UL	cULus E115267 Industrial control equipment	
HazLoc	cULus HazLoc E180196 Industrial control equipment for hazardous locations Class I, Division 2, Groups ABCD, T4 [1]	
DNV	Temperature: **B** (0 - 55°C) Humidity: **B** (up to 100%) Vibration: **A** (0.7 g) EMC: **B** (bridge and open deck) [2]	
KR	Yes	
EAC	Yes	
Terminal block		
Note	Protected against vibration by the screw flange Nominal data per UL	
Number of pins	3 (female)	
Type of terminal block	Screw clamp terminal block variant	Cage clamp terminal block variant [3]
Cable type	Only copper wires (no aluminum wires!)	
Pitch	5.08 mm	
Connection cross section		
AWG wire	26 to 14 AWG	26 to 12 AWG
Wire end sleeves with plastic covering	0.20 to 1.50 mm²	
Solid wires	0.20 to 2.50 mm²	
Fine-stranded wires	0.20 to 1.50 mm²	0.20 to 2.50 mm²
With wire end sleeves	0.20 to 1.50 mm²	
Tightening torque	0.4 Nm	-
Electrical properties		
Nominal voltage	300 V	
Nominal current [4]	10 A / contact	
Contact resistance	≤5 mΩ	
Operating conditions		
Pollution degree per EN 61131-2	Pollution degree 2	

1) Yes, but applies only if all components installed in the complete system have this certification and the complete system bears the corresponding mark.
2) Yes, but applies only if all components installed in the complete system have this certification and are listed on the associated DNV certificate for the product family.
3) The cage clamp terminal block cannot be used side by side.
4) The respective limit data of the I/O modules must be taken into account!

10.4 Terminal block for IF options

10.4.1 0TB1210.3100

10.4.1.1 General information

2-row 10-pin terminal block TB1210 is used to connect to the interfaces of various interface options.

10.4.1.2 Order data

Order number	Short description	Figure
	Terminal blocks	
0TB1210.3100	Connector 300 VDC - 10-pin female - Cage clamp terminal block - Protected against vibration by the screw flange	

10.4.1.3 Technical data

Information:

The following specified characteristic data, features and limit values are only valid for this accessory and may differ from those of the complete system. The data specified for the complete system applies to the complete system in which this accessory is installed, for example.

Order number	0TB1210.3100
General information	
Certifications	
CE	Yes
UL	cULus E115267 Industrial control equipment
HazLoc	cULus HazLoc E180196 Industrial control equipment for hazardous locations Class I, Division 2, Groups ABCD, T4 [1]
DNV	Temperature: **B** (0 - 55°C) Humidity: **B** (up to 100%) Vibration: **A** (0.7 g) EMC: **B** (bridge and open deck) [2]
KR	Yes
EAC	Yes
Terminal block	
Note	Nominal data per UL
Number of pins	10 (female)
Type of terminal block	Push-in spring connection
Cable type	Only copper wires (no aluminum wires!)
Pitch	3.5 mm
Connection cross section	
AWG wire	26 to 16 AWG
Wire end sleeves with plastic covering	0.14 to 1 mm²
Solid wires	0.14 to 1.5 mm²
Fine-stranded wires	0.14 to 1.5 mm²
With wire end sleeves	0.14 to 1.5 mm²
Electrical properties	
Nominal voltage	300 V
Nominal current [3]	10 A
Operating conditions	
Pollution degree per EN 61131-2	Pollution degree 2

1) Yes, but applies only if all components installed in the complete system have this certification and the complete system bears the corresponding mark.
2) Yes, but applies only if all components installed in the complete system have this certification and are listed on the associated DNV certificate for the product family.
3) The respective limit data of the I/O modules must be taken into account!

10.5 USB mass storage device

For additional information about compatible USB mass storage devices, see the B&R website (USB mass storage devices).

10.6 Heat pipes

10.6.1 5ACCHP00.0000-000

Heat pipe 5ACCHP00.0000-000 is used to improve heat dissipation. It is used only in conjunction with PPC2100 swing arm system units and swing arm mounting unit.

10.6.1.1 Order data

Order number	Short description	Figure
	Heat pipe	
5ACCHP00.0000-000	AP5000 heat pipe - For PPC2100 (5PPC2100.BYxx-002) - For swing arm mounting unit	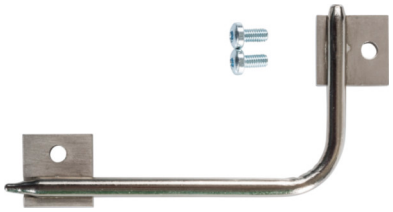

Table 108: 5ACCHP00.0000-000 - Order data

10.6.2 5ACCHP00.0004-000

Heat pipe 5ACCHP00.0004-000 is used to improve heat dissipation. It is used only in conjunction with PPC2100 system units and VESA IP54 mounting unit.

10.6.2.1 Order data

Order number	Short description	Figure
	Heat pipe	
5ACCHP00.0004-000	AP5000 heat pipe - For PPC2100 (5PPC2100.BYxx-002) - For VESA mounting unit	

10.7 Cables

For additional information about compatible cables, see the B&R website (HMI cable manual).

10.8 USB hub

10.8.1 5ACCUSB2.0002-000

10.8.1.1 General information

- 2x USB 2.0 interfaces
- Compatible with PPC2100 swing arm device (AP5000) and PPC2200 swing arm device (AP5000)

10.8.1.2 Order data

Order number	Short description	Figure
	Accessories	
5ACCUSB2.0002-000	2-port USB hub, passive - For Automation Panel 5000	

10.8.1.3 Technical data

Warning!

USB peripheral devices can be connected to the USB interfaces. Due to the variety of USB devices available on the market, B&R cannot guarantee their functionality. The functionality of USB devices available from B&R is ensured.

Caution!

Due to the general PC specification, this interface must be handled with the utmost care with regard to EMC, cable routing, etc.

Information:

The following specified characteristic data, features and limit values are only valid for this accessory and may differ from those of the complete system. The data specified for the complete system applies to the complete system in which this accessory is installed, for example.

Order number	5ACCUSB2.0002-000
General information	
B&R ID code	0xEAB8
Certifications	
CE	Yes
UL	cULus E115267 Industrial control equipment
EAC	Product family certification
Interfaces	
USB	
Quantity	2
Type	USB 2.0
Variant	Type A
Transfer rate	Low speed (1.5 Mbit/s), full speed (12 Mbit/s) to high speed (480 Mbit/s)
Current-carrying capacity	Total max. 1 A (sum of all 2 ports)
Operating conditions	
Pollution degree per EN 61131-2	Pollution degree 2
Degree of protection per EN 60529	IP20 [1)]
Ambient conditions	
Temperature	
Operation	0 to 55°C [2)]
Storage	-10 to 70°C
Transport	-10 to 70°C
Relative humidity	
Operation	5 to 90%, non-condensing
Storage	5 to 95%, non-condensing
Transport	5 to 95%, non-condensing
Elevation	
Operation	Max. 3000 m [2)]

Order number	5ACCUSB2.0002-000
Mechanical properties	
Housing	
Material	Aluminum, coated
Coating	Anthracite gray
Dimensions	
Width	34 mm
Height	23 mm
Depth	57 mm
Weight	70 g

1) Only if all interface covers are installed.
2) The maximum ambient temperature is typically derated 1°C per 1000 meters starting at 500 m above sea level.

10.8.1.3.1 USB interfaces

The 2-port USB hub is equipped with a USB 2.0 (Universal Serial Bus) host controller with several USB ports, of which two USB 2.0 interfaces are routed externally and freely available to the user. The USB hub takes up the USB2 interface on the system unit in the standard configuration.

Warning!

USB peripheral devices can be connected to the USB interfaces. Due to the variety of USB devices available on the market, B&R cannot guarantee their functionality. The functionality of USB devices available from B&R is ensured.

Caution!

Due to the general PC specification, this interface must be handled with the utmost care with regard to EMC, cable routing, etc.

USB HUB 1 - USB HUB 2

USB HUB 1 - USB HUB 2		
Standard	USB 2.0	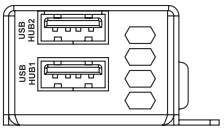
Variant	Type A, female	
Quantity	2	
Transfer rate	Low speed (1.5 Mbit/s)	
	Full speed (12 Mbit/s)	
	High speed (480 Mbit/s)	
Current-carrying capacity[1]	Total max. 1 A (sum of all 2 ports)	
Cable length		
USB 2.0	Max. 5 m	
-		

1) The USB hub is protected by a maintenance-free "USB current-limiting switch" (max. 1 A).

Information:

If a Technology Guard (USB dongle) is used, it is recommended to connect it to the USB HUB 2 interface.

10.8.1.4 Dimensions

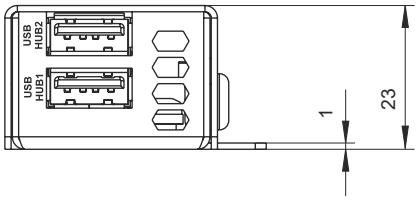

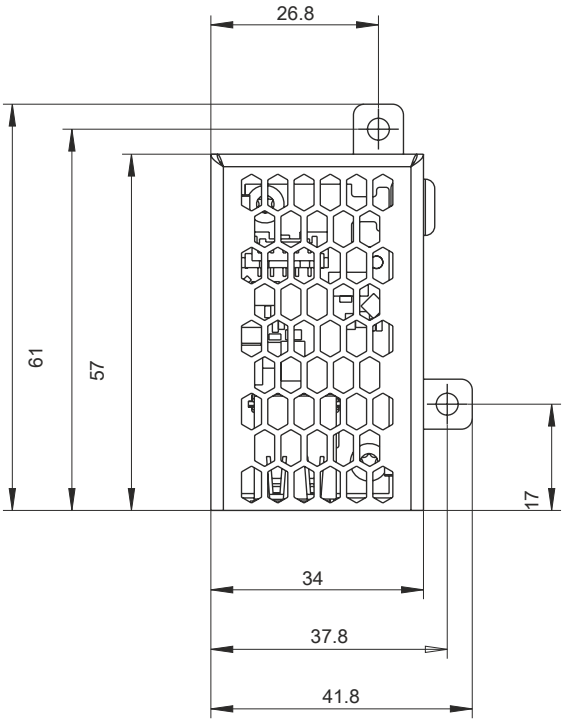

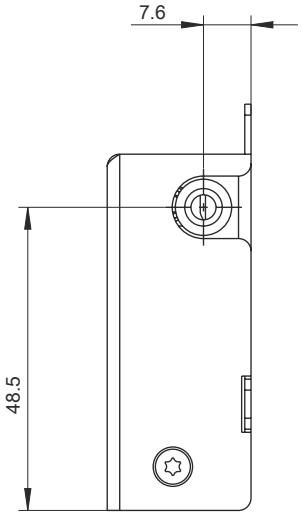

10.9 Replacement parts

The following replacement parts can be ordered for the PPC2100 swing arm (AP5000):

- Mounting screws for PPC2100
- Slot cover for interfaces
- Cover for CFast slot

10.9.1 Replacement parts - Order data

Material number	Description
5ACCRPC2.0000-000	REP PPC2100/2200 mounting screws kit - 4x screw M3x34 mm - 2x special screw for PPC2100
5ACCRPC2.0001-000	REP xPC2100/2200 interface covers - 1x cover set

11 Environmentally friendly disposal

All programmable logic controllers, operating and monitoring devices and uninterruptible power supplies from B&R are designed to have as little impact on the environment as possible.

11.1 Separation of materials

To ensure that devices can be recycled in an environmentally friendly manner, it is necessary to separate out the different materials.

Component	Disposal
Programmable logic controllers Operating and monitoring devices Uninterruptible power supplies Batteries and rechargeable batteries Cables	Electronics recycling
Paper/Cardboard packaging	Paper/Cardboard recycling
Plastic packaging material	Plastic recycling

Disposal must be carried out in accordance with applicable legal regulations.

Appendix A

A.A Maintenance Controller Extended (MTCX)

The MTCX controller (FPGA processor) is located on the mainboard (part of each system unit) of the APC2100 and PPC2100 device.

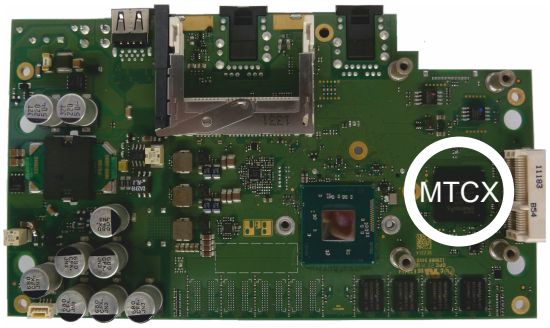

The MTCX is responsible for the following monitoring and control functions:

- Switching on (power OK sequencing) and power failure logic
- Watchdog handling (NMI and reset handling)
- Temperature monitoring
- Fan control
- Handling/Coordination of keys and LEDs (matrix keyboard of B&R panels)
- Advanced desktop operation (buttons, USB forwarding)
- Daisy chain display operation (touch screen, USB forwarding)
- Panel locking mechanism (configurable via the B&R Control Center - ADI driver)
- Backlight control of a connected B&R display
- Calculating statistical data: Power-on cycles, power-on hours and fan hours (resolution: 15 min)
- SDL data transfer (display, matrix keyboard, touch screen, service data, USB)
- LED status indicators (Power, HDD, Link, Run)
- Optimal default BIOS settings are reported to BIOS by the MTCX depending on the existing hardware.

The functions of the MTCX can be extended by upgrading its firmware[6]. The version can be read in BIOS or in approved Microsoft Windows operating systems using the B&R Control Center.

A.B Viewing angles

For viewing angle specifications (R, L, U, D) of the display types, see the technical data of the individual components.

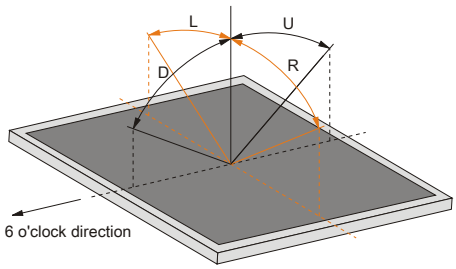

[6] Can be downloaded from the Downloads section of the B&R website (www.br-automation.com).

A.C Chemical resistance

All panels are made of a coated aluminum support frame.

Single-touch panels

- Single-touch panels are manufactured with Autotex panel overlay:

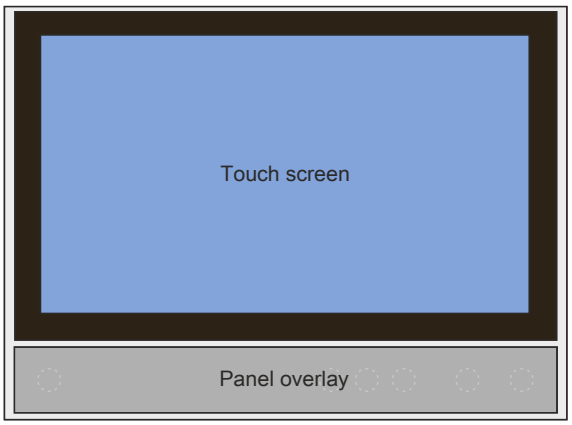

Multi-touch panels

- Multi-touch panels are manufactured with a continuous glass surface.

A.C.1 Autotex panel overlay (polyester)

Unless otherwise specified, the panel overlay is resistant to the following chemicals per DIN 42115 Part 2 when exposed for up to 24 hours without visible changes:

- Acetaldehyde
- Acetone
- Acetonitrile
- Aliphatic hydrocarbons
- Alkali carbonate
- Formic acid < 50%
- Ammonia < 40%
- Amyl acetate
- Ethanol
- Ether
- Gasoline
- Bichromate
- Potassium
- Cutting oil
- Brake fluid
- Butyl CELLOSOLVE (2-Butoxyethanol)
- Sodium hypochlorite < 20%
- Cyclohexanol
- Cyclohexanone
- Decon
- Diacetone alcohol
- Dibutyl phthalate
- Diesel
- Diethyl ether
- Diethyl phthalate
- Dioxan
- Dowandol DRM/PM
- Iron II chloride ($FeCl_2$)
- Iron III chloride ($FeCl_3$)
- Acetic acid < 50%
- Butyl acetate
- Ethyl acetate
- Linseed oil
- Aviation fuel
- Formaldehyde 37 to 42%
- Glycerine
- Glycol
- Isophorone
- Isopropanol
- Potassium hydroxide
- Potassium carbonate
- Methanol
- Methylisobutylketone (MIBK)
- Sodium bisulphate
- Sodium carbonate
- Caustic soda < 40%
- Paraffin oil
- Phosphoric acid < 30%
- Blown castor oil
- Nitric acid < 10%
- Hydrochloric acid < 36%
- Sea water
- Sulphuric acid < 10%
- Silicon oil
- Tenside
- Turpentine oil substitute
- Toluene
- Triacetin
- Trichloracetic acid < 50%
- Trichloroethane
- Thinner (white spirit)
- Washing agents
- Water
- Hydrogen peroxide < 25%
- Fabric conditioner
- Xylene

Per DIN 42115 Part 2, the panel overlay is resistant to exposure to glacial acetic acid for less than one hour without visible damage.

A.C.2 Coated aluminum front

Unless otherwise specified, the coated aluminum front is resistant to the following chemicals per DIN 42115 Part 2 when exposed for up to 24 hours without visible changes:

- Formic acid <50%
- Ammonia <40%
- Brake fluid
- Hydrogen chloride <10%
- Diesel
- Acetic acid <50%
- Gear oil
- Lactic acid <10%
- Isopropanol
- Coolant <4%
- Sodium hydroxide <40%
- Petroleum
- Phosphoric acid <25%
- Saline <10%
- Sulphuric acid <25%
- Sidolin
- Skydrol

The coated aluminum front is not resistant to the following chemicals:

- Acetone
- Ethyl acetate

A.C.3 Touch screen

5-wire touch screen (single-touch)

Unless otherwise specified, the touch screen is resistant to the following chemicals when exposed for up to 1 hour (at 25°C) with no visible changes:

- Acetone
- Beer
- Unleaded gasoline
- Chemical cleaning agents
- Hydrogen chloride < 6%
- Coca-Cola
- Diesel
- Dimethylbenzene
- Vinegar
- Ethanol
- Antifreeze
- Gear oil
- Ammonia-based glass cleaner
- Household detergents
- Hexane
- n-hexane
- Isopropanol
- Coffee
- Methylbenzene
- Methylene chloride
- Methyl ethyl ketone
- Mineral spirits
- Motor oil
- Nitric acid < 70%
- Saline solution < 5%
- Tea
- Turpentine
- Lubricants
- Sulphuric acid < 40%
- Cooking oil

Touch screen generation 2 and 3 (multi-touch)

Unless otherwise specified, the touch screen is resistant to the following chemicals per ASTM D 1308-02 and ASTM F 1598-95 when exposed for up to 24 hours without visible changes:

- Acetone
- Ammonia < 5%
- Gasoline
- Beer
- Lead
- Brake fluid
- Hydrogen chloride < 6%
- Coca-Cola
- Dimethylbenzene
- Ethanol
- Rubber cement
- Isopropanol
- Coffee
- Ink
- Lipstick
- Lysol
- Methylbenzene
- Methyl ethyl ketone
- Naphtha
- Nitric acid < 70%
- Lubricants
- Sulphuric acid < 40%
- Stamping ink
- Tea
- Trichloroethylene
- Water
- White wine vinegar
- Windex Original

A.D Cable data

Signal		Signal	
RS232	"RS232 - Bus length and cable type" on page 288	RS422	"RS422 - Bus length and cable type" on page 288
RS485	"RS485 - Bus length and cable type" on page 289	CAN	"CAN - Bus length and cable type" on page 289

A.D.1 RS232 - Bus length and cable type

The maximum transfer rate of 115 kbit/s depends on the cable length and type of cable used.

Bus length	Transfer rate
≤15 m	Typ. 64 kbit/s
≤10 m	Typ. 115 kbit/s
≤5 m	Typ. 115 kbit/s

Preferably, the cable material used should have the following properties or deviate only slightly from them in order to achieve an optimal transfer rate.

RS232 cables		Property
Signal line		
	Cable cross section	4x 0.16 mm² (26 AWG), tinned copper stranded wire
	Wire insulation	PE
	Conductor resistance	≤82 Ω/km
	Stranding	Wires stranded in pairs
	Shield	Pair shielding with aluminum foil
GND		
	Cable cross section	1x 0.34 mm² (22AWG/19), tinned copper stranded wire
	Wire insulation	PE
	Conductor resistance	≤59 Ω/km
Outer jacket		
	Material	PUR compound
	Properties	Halogen-free
	Cable shield	Tinned copper wire

A.D.2 RS422 - Bus length and cable type

The RTS line must be switched on to activate the transmitter.

The maximum transfer rate of 115 kbit/s depends on the cable length and type of cable used.

Bus length	Transfer rate
1200 m	Typ. 115 kbit/s

Preferably, the cable material used should have the following properties or deviate only slightly from them in order to achieve an optimal transfer rate.

RS422 cables		Property
Signal line		
	Cable cross section	4x 0.25 mm² (24AWG/19), tinned copper stranded wire
	Wire insulation	PE
	Conductor resistance	≤82 Ω/km
	Stranding	Wires stranded in pairs
	Shield	Pair shielding with aluminum foil
GND		
	Cable cross section	1x 0.34 mm² (22AWG/19), tinned copper stranded wire
	Wire insulation	PE
	Conductor resistance	≤59 Ω/km
Outer jacket		
	Material	PUR compound
	Properties	Halogen-free
	Cable shield	Tinned copper wire

A.D.3 RS485 - Bus length and cable type

The maximum transfer rate of 115 kbit/s depends on the cable length and type of cable used.

Bus length	Transfer rate
1200 m	Typ. 115 kbit/s

Preferably, the cable material used should have the following properties or deviate only slightly from them in order to achieve an optimal transfer rate.

RS485 cables		Property
Signal line		
	Cable cross section	4x 0.25 mm² (24AWG/19), tinned copper stranded wire
	Wire insulation	PE
	Conductor resistance	≤82 Ω/km
	Stranding	Wires stranded in pairs
	Shield	Pair shielding with aluminum foil
GND		
	Cable cross section	1x 0.34 mm² (22AWG/19), tinned copper stranded wire
	Wire insulation	PE
	Conductor resistance	≤59 Ω/km
Outer jacket		
	Material	PUR compound
	Properties	Halogen-free
	Cable shield	Tinned copper wire

A.D.4 CAN - Bus length and cable type

The type of cable to be used depends largely on the required bus length and number of nodes. The bus length is determined by the transfer rate. Per CiA (CAN in Automation), the maximum bus length is 1000 meters.

The following bus lengths are permitted at a maximum permissible oscillator tolerance of 0.121%:

Bus length[1)]	Transfer rate
≤1000 m	Typ. 50 kbit/s
≤200 m	Typ. 250 kbit/s
≤100 m	Typ. 500 kbit/s
≤20 m[2)]	Typ. 1 Mbit/s
≤15 m[3)]	

1) The specified cable length is only valid with the values specified in "CAN driver settings". Cable lengths otherwise depend on the values in the bit timing register, cable quality and number of nodes.
2) For CAN interfaces without galvanic isolation and 5ACCIF01.ICAN-000.
3) For CAN interfaces with galvanic isolation.

Preferably, the cable material used should have the following properties or deviate only slightly from them in order to achieve an optimal transfer rate.

CAN cable		Property
Signal line		
	Cable cross section	2x 0.25 mm² (24AWG/19), tinned copper stranded wire
	Wire insulation	PE
	Conductor resistance	≤82 Ω/km
	Stranding	Wires stranded in pairs
	Shield	Pair shielding with aluminum foil
GND		
	Cable cross section	1x 0.34 mm² (22AWG/19), tinned copper stranded wire
	Wire insulation	PE
	Conductor resistance	≤59 Ω/km
Outer jacket		
	Material	PUR compound
	Properties	Halogen-free
	Cable shield	Tinned copper wire

A.E POWERLINK

A.E.1 LED "S/E" (LED "Status/Error")

This LED is a green/red dual LED and indicates the state of the POWERLINK interface. The LED states have a different meaning depending on the operating mode of the POWERLINK interface.

A.E.1.1 Ethernet mode

In this mode, the interface is operated as an Ethernet interface.

LED "S/E"		
Green	**Red**	**Description**
On	Off	The interface is operated as an Ethernet interface.

Table: LED "S/E": Interface in Ethernet mode

A.E.1.2 POWERLINK V2 mode

Error message

LED "S/E"		
Green	**Red**	**Description**
Off	On	The interface is in error mode (failed Ethernet frames, increased number of collisions on the network, etc.). Note: Several red blinking signals are displayed immediately after the device is switched on. These are not errors, however.
Blinking	On	If an error occurs in the following modes, then the green LED blinks over the red LED: • PRE_OPERATIONAL_1 • PRE_OPERATIONAL_2 • READY_TO_OPERATE 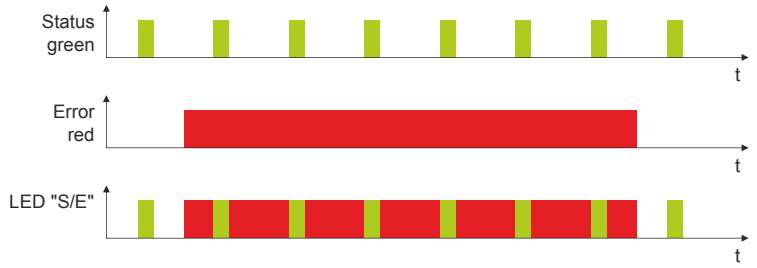

Table: LED "S/E" - Error message (interface in POWERLINK mode)

Interface status

LED "S/E"		
Green	**Red**	**Description**
Off	Off	**Mode:** NOT_ACTIVE The interface is either in mode NOT_ACTIVE or one of the following modes or errors is present: • The device is switched off. • The device is in the startup phase. • The interface or device is not configured correctly in Automation Studio. • The interface or device is defective. **Managing node (MN)** The network is monitored for POWERLINK frames. If a frame is not received within the configured time window (timeout), the interface immediately enters mode PRE_OPERATIONAL_1. If POWERLINK communication is detected before the time has elapsed, however, the MN is not started. **Controlled node (CN)** The network is monitored for POWERLINK frames. If a frame is not received within the configured time window (timeout), the interface immediately enters mode BASIC_ETHERNET. If POWERLINK communication is detected before this time expires, however, the interface immediately enters mode PRE_OPERATIONAL_1.
Flickering (approx. 10 Hz)	Off	**Mode:** BASIC_ETHERNET The interface is in mode BASIC_ETHERNET. The interface is operated in Ethernet mode. **Managing node (MN)** This mode can only be exited by resetting the controller. **Controlled node (CN)** If POWERLINK communication is detected during this mode, the interface enters mode PRE_OPERATIONAL_1.

Table: LED "S/E" - Interface state (interface in POWERLINK mode)

LED "S/E"		
Green	**Red**	**Description**
Single flash (approx. 1 Hz)	Off	**Mode:** PRE_OPERATIONAL_1 The interface is in mode PRE_OPERATIONAL_1. **Managing node (MN)** The MN is in "reduced cycle" mode. The CNs are configured in this mode. Cyclic communication is not yet taking place. **Controlled node (CN)** The CN can be configured by the MN in this mode. The CN waits until it receives an SoC frame and then switches to mode PRE_OPERATIONAL_2.
	On	**Controlled node (CN)** If the red LED lights up in this mode, this means that the MN has failed.
Double flash (approx. 1 Hz)	Off	**Mode:** PRE_OPERATIONAL_2 The interface is in mode PRE_OPERATIONAL_2. **Managing node (MN)** The MN starts cyclic communication (cyclic input data is not yet evaluated). The CNs are configured in this mode. **Controlled node (CN)** The CN can be configured by the MN in this mode. A command then switches the mode to READY_TO_OPERATE.
	On	**Controlled node (CN)** If the red LED lights up in this mode, this means that the MN has failed.
Triple flash (approx. 1 Hz)	Off	**Mode:** READY_TO_OPERATE The interface is in mode READY_TO_OPERATE. **Managing node (MN)** Cyclic and asynchronous communication. Received PDO data is ignored. **Controlled node (CN)** The configuration of the CN is completed. Normal cyclic and asynchronous communication. The transmitted PDO data corresponds to the PDO mapping. However, cyclic data is not yet evaluated.
	On	**Controlled node (CN)** If the red LED lights up in this mode, this means that the MN has failed.
On	Off	**Mode:** OPERATIONAL The interface is in mode OPERATIONAL. PDO mapping is active and cyclic data is evaluated.
Blinking (approx. 2.5 Hz)	Off	**Mode:** STOPPED The interface is in mode STOPPED. **Managing node (MN)** This mode does not occur for the MN. **Controlled node (CN)** Output data is not being output, and no input data is being provided. This mode can only be reached and exited by a corresponding command from the MN.

Table: LED "S/E" - Interface state (interface in POWERLINK mode)

Blink times

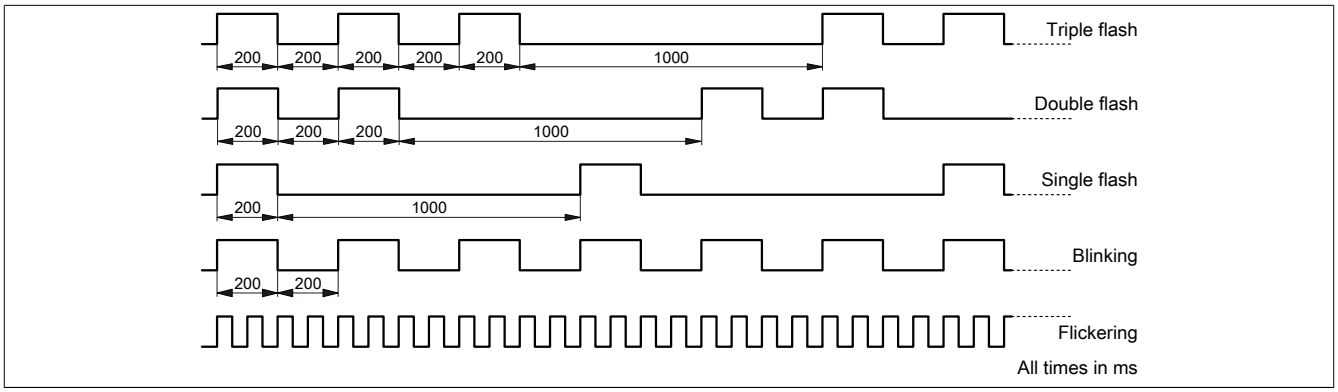

A.E.1.3 System stop error codes

A system stop error can occur due to incorrect configuration or defective hardware.

The error code is indicated by LED "S/E" blinking red. The blinking signal of the error code consists of 4 switch-on phases with short (150 ms) or long (600 ms) duration. The error code is repeated every 2 seconds.

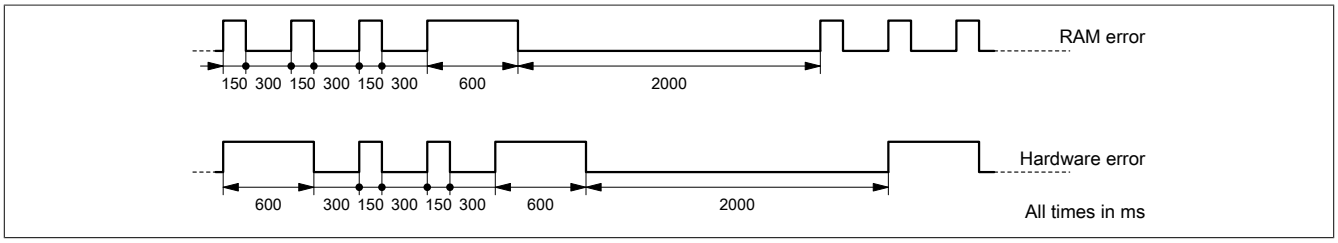

Error	Error description
RAM error	The device is defective and must be replaced.
Hardware error	The device or a system component is defective and must be replaced.

A.E.1.4 POWERLINK V2

By default, the POWERLINK interface is operated as a managing node (MN). In the managing node, the node number is set to a fixed value of 240.

If the POWERLINK node is operated as a controlled node (CN), a node number from 1 to 239 can be set in the POWERLINK configuration in Automation Studio.

A.F Touch screen

A.F.1 5-wire touch screen (single-touch)

A.F.1.1 Technical data

Information:

The following specified characteristic data, features and limit values are only valid for these individual components and may differ from those of the complete system. The data specified for the complete system applies to the complete system in which this individual component is used, for example.

Note:

Drivers for this touch screen for approved operating systems are available for download in the Downloads section of the B&R website (www.br-automation.com).

Order number	**Touchscreen 5-Draht**
General information	
Technology	Analog, resistive
Release pressure	<1 N
Light transmission	80% ±3%
Service life	10,000,000 touch operations at the same position (release pressure: 250 g, interval: 0.25 s)
Operating conditions	
Activation	Finger, stylus, credit card, glove
Ambient conditions	
Temperature	
Operation	-20 to 70°C
Storage	-40 to 80°C
Transport	-40 to 80°C
Relative humidity	
Operation	90% at max. 50°C
Storage	90% RH at max. 60°C for 504 hours
Transport	90% RH at max. 60°C for 504 hours

A.F.1.2 Temperature/Humidity diagram

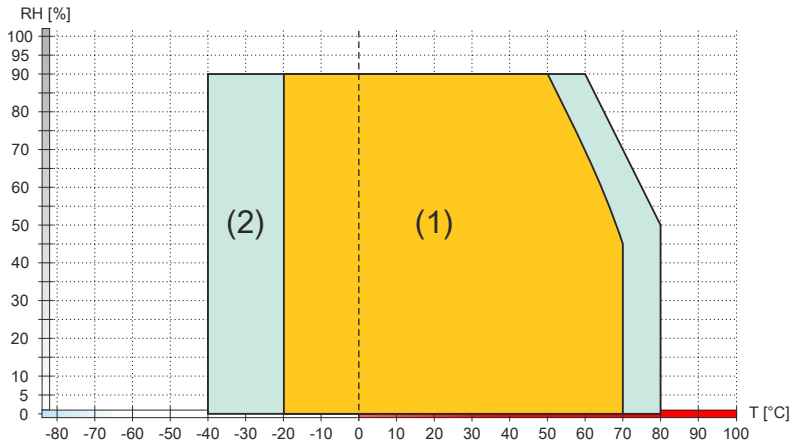

Figure 12: 5-wire AMT touch screen - Temperature/Humidity diagram

Diagram legend			
(1)	Operation	T [°C]	Temperature in °C
(2)	Storage and transport	RH [%]	Relative humidity (RH) in percent and **non-condensing**

A.F.2 3M touch screen (multi-touch generation 3)

A.F.2.1 Technical data

Information:

The following specified characteristic data, features and limit values are only valid for these individual components and may differ from those of the complete system. The data specified for the complete system applies to the complete system in which this individual component is used, for example.

Order number	Touchscreen
General information	
Technology	Projected capacitive touch (PCT)
Light transmission	>90%
Anti-glare coating	Optical/Gloss = 80
Operating conditions	
Activation	Finger, thin glove
Ambient conditions	
Temperature	
Operation	-10 to 70°C
Storage	-40 to 70°C
Transport	-40 to 70°C
Relative humidity	
Operation	Up to 90% at max. 35°C, see diagram for > 35°C.
Storage	Up to 90% at max. 35°C, see diagram for > 35°C.
Transport	Up to 90% at max. 35°C, see diagram for > 35°C.

A.F.2.2 Temperature/Humidity diagram

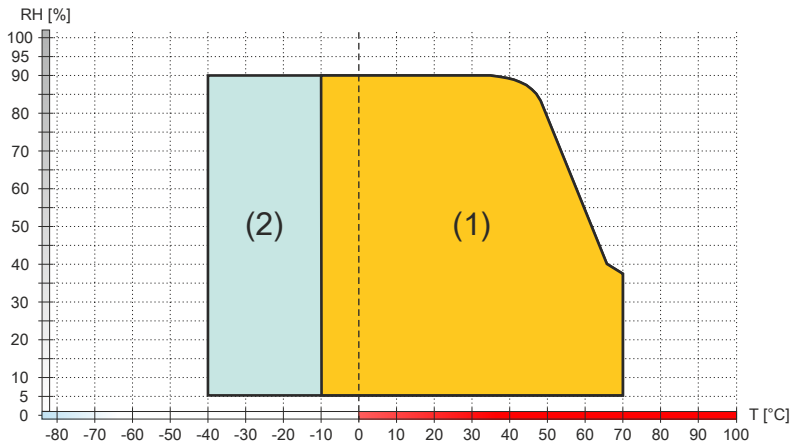

Diagram legend			
(1)	Operation	T [°C]	Temperature in °C
(2)	Storage and transport	RH [%]	Relative humidity (RH) in percent and **non-condensing**

A.G Features

A.G.1 Pushbutton RAFIX 22 FS+, 1.30.270.021/2300

Pushbutton 1.30.270.021/2300		
Manufacturer	RAFI	Example image 
Type	RAFIX 22 FS+	
Manufacturer number	1.30.270.021/2300	
Quantity	1	
Illumination	Red	
Contact function	Momentary	
Service life (switching cycles)	1,000,000	
B10 value (switching cycles)	1,300,000	
Actuation travel	4 mm	
Stop strength	Max. 100 N	

Table 114: Pushbutton 1.30.270.021/2300

A.G.2 Pushbutton RAFIX 22 FS+, 1.30.270.021/2500

Pushbutton 1.30.270.021/2500		
Manufacturer	RAFI	Example image 
Type	RAFIX 22 FS+	
Manufacturer number	1.30.270.021/2500	
Illumination	Green	
Contact function	Momentary	
Service life (switching cycles)	1,000,000	
B10 value (switching cycles)	1,300,000	
Actuation travel	4 mm	
Stop strength	Max. 100 N	

Table 115: Pushbutton 1.30.270.021/2500

A.G.3 Pushbutton RAFIX 22 FS+, 1.30.270.021/2600

Pushbutton 1.30.270.021/2600		
Manufacturer	RAFI	Example image 
Type	RAFIX 22 FS+	
Manufacturer number	1.30.270.021/2600	
Quantity	1	
Illumination	Blue	
Contact function	Momentary	
Service life (switching cycles)	1,000,000	
B10 value (switching cycles)	1,300,000	

Table 116: Pushbutton 1.30.270.021/2600

A.G.4 Selector switch RAFIX 22 FS+, 1.30.272.102/2200

Selector switch 1.30.272.102/2200		
Manufacturer	RAFI	Example image 
Type	RAFIX 22 FS+	
Manufacturer number	1.30.272.102/2200	
Illumination	White	
Contact function	Maintained	
Angle of rotation	1 x 90°, L form	
Service life (switching cycles)	300,000	
B10 value (switching cycles)	400,000	
Actuation torque	Max. 1.5 Nm	

Table 117: Selector switch 1.30.272.102/2200

A.G.5 Key switch RAFIX 22 FS+, 1.30.255.222/0000

Key switch 1.30.255.222/0000		
Manufacturer	RAFI	Example image
Type	RAFIX 22 FS+	
Manufacturer number	1.30.255.222/0000	
Contact function	Maintained	
Number of possible closings	500	
Angle of rotation	1 x 90°, L form	
Key removal position	0+1	
Service life (switching cycles)	50,000 maintained / 30,000 key removal switching cycles	
B10 value (switching cycles)	65,000 maintained / 40,000 key removal switching cycles	
Actuation torque	Max. 1.3 Nm	

Table 118: Key switch 1.30.255.222/0000

A.G.5.1 Replacement key for key switch RAFIX 22 FS+ 5.58.007.001/0000

Replacement key 5.58.007.001/0000		
ROHS-compliant	Yes	Example image
REACH-compliant	Yes	

A.G.6 Emergency stop RAFIX 22 FS+ "Plus 1", 1.30.273.512/0300

Emergency stop 1.30.273.512/0300		
Manufacturer	RAFI	Example image
Type	RAFIX 22 FS+ emergency stop button "Plus 1"	
Manufacturer number	1.30.273.512/0300	
Contact function	Maintained	
Resetting	By rotating to the right	
Service life (switching cycles)	50,000	
B10 value (switching cycles)	65,000	

Table 119: Emergency stop 1.30.273.512/0300

A.G.7 Switching element RAFIX 22 FS universal, 1.20.126.005/0000

Switching element 1.20.126.005/0000		
Manufacturer	RAFI	Example image
Type	RAFIX 22 FS+ - universal, 2 S	
Manufacturer number	1.20.126.005/0000	
Contact system	Self-cleaning bridge contact	
Contact material	Au	
Contacts	2 normally open contacts	
Connection	THT soldered connection with anti-rotation element	
Service life (switching cycles)	1,000,000 at 10 mA / 24 VDC	
B10 value (switching cycles)	1,300,000	
AC/DC operating voltage	Min. 1 V	
AC/DC operating voltage	Max. 35 V	
AC/DC operating current	Min. 1 mA	
AC/DC operating current	Max. 100 mA	
Switching capacity	Max. 250 mW	

Table 120: Switching element 1.20.126.005/0000

A.G.8 Switching element RAFIX 22 FS+ PCB gold, 1.20.126.414/0000

Switching element 1.20.126.414/0000		
Manufacturer	RAFI	Example image 
Type	RAFIX 22 FS+ - PCB gold, emergency stop "Plus 1"	
Manufacturer number	1.20.126.414/0000	
Contact system	Self-cleaning bridge contact	
Contact material	Au	
Contacts	2 normally closed contacts + 1 alarm contact [1)]	
Normally closed contact with positive separation per IEC 60947-5-1	Yes	
Connection	THT soldered connection with anti-rotation element	
Service life (switching cycles)	50,000 at 10 mA / 24 VDC	
B10 value (switching cycles)	65,000	
AC/DC operating voltage	Min. 1 V	
AC/DC operating voltage	Max. 35 V	
AC/DC operating current	Min. 1 mA	
AC/DC operating current	Max. 100 mA	
Switching capacity	Max. 250 mW	

Table 121: Switching element 1.20.126.414/0000

1) The alarm contact is only momentary and not designed as a maintained contact.

A.G.9 5ACCSE00.000x-00x

B&R recommends RAFIX operating and switching elements with model number 5ACCSE00.000x-00x for use on expansion covers.

RAFIX operating and switching elements with model number 5ACCSE00.000x-00x must be ordered separately.

A.G.9.1 5ACCSE00.0000-000

General information

- 1x pushbutton
- 1x colored lens (no color, red, yellow, green, blue)
- 1x switching element
- 1x LED

A.G.9.1.1 Pushbutton RAFIX 22 FS+, 1.30.270.921/2200

Pushbutton 1.30.270.921/2200		
Manufacturer	RAFI	Example image 
Type	RAFIX 22 FS+	
Manufacturer number	1.30.270.921/2200	
Quantity	1	
Form of lens	Flat lens	
Contact function	Momentary	
Service life (switching cycles)	1,000,000	
B10 value (switching cycles)	1,300,000	

Table 122: Pushbutton 1.30.270.921/2200

A.G.9.1.2 Colored lens RAFIX 22 FS+, 5.49.263.062/1000

Colored lens 5.49.263.062/1000		
Manufacturer	RAFI	Example image
Type	RAFIX 22 FS+	
Manufacturer number	5.49.263.062/1000	
Quantity	1	
Form of lens	Flat lens	
Lens color	Colorless	

Table 123: Colored lens 5.49.263.062/1000

A.G.9.1.3 Colored lens RAFIX 22 FS+, 5.49.263.062/1300

Colored lens 5.49.263.062/1300		
Manufacturer	RAFI	Example image 
Type	RAFIX 22 FS+	
Manufacturer number	5.49.263.062/1300	
Quantity	1	
Form of lens	Flat lens	
Lens color	Red	

Table 124: Colored lens 5.49.263.062/1300

A.G.9.1.4 Colored lens RAFIX 22 FS+, 5.49.263.062/1400

Colored lens 5.49.263.062/1400		
Manufacturer	RAFI	Example image 
Type	RAFIX 22 FS+	
Manufacturer number	5.49.263.062/1400	
Quantity	1	
Form of lens	Flat lens	
Lens color	Yellow	

Table 125: Colored lens 5.49.263.062/1400

A.G.9.1.5 Colored lens RAFIX 22 FS+, 5.49.263.062/1500

Colored lens 5.49.263.062/1500		
Manufacturer	RAFI	Example image 
Type	RAFIX 22 FS+	
Manufacturer number	5.49.263.062/1500	
Quantity	1	
Form of lens	Flat lens	
Lens color	Green	

Table 126: Colored lens 5.49.263.062/1500

A.G.9.1.6 Colored lens RAFIX 22 FS+, 5.49.263.062/1600

Colored lens 5.49.263.062/1600		
Manufacturer	RAFI	Example image 
Type	RAFIX 22 FS+	
Manufacturer number	5.49.263.062/1600	
Quantity	1	
Form of lens	Flat lens	
Lens color	Blue	

Table 127: Colored lens 5.49.263.062/1600

A.G.9.1.7 Switching element RAFIX FS, 1.20.126.102/9000

Switching element 1.20.126.102/9000		
Manufacturer	RAFI	Example image 
Type	RAFIX FS	
Manufacturer number	1.20.126.102/9000	
Quantity	1	
Contact system	Self-cleaning bridge contact	
Contacts	1 normally open contact	
Normally closed contact with direct opening action per IEC 947-5-1	Yes	
Connection	Connector 2.8x0.8 mm	
Lamp	LED clip	
Service life (switching cycles)	1,000,000	
B10 value (switching cycles)	1,300,000	
Min. AC/DC operating voltage	5 V	
Max. AC/DC operating voltage	35 V	
Min. AC/DC operating current	1 mA	
Max. AC/DC operating current	100 mA	
Max. switching capacity	250 mW	

Table 128: Switching element 1.20.126.102/9000

A.G.9.2 5ACCSE00.0000-001

General information

- 1x pushbutton
- 1x colored lens (no color, red, yellow, green, blue)
- 1x switching element
- 1x LED

A.G.9.2.1 Pushbutton RAFIX 22 FS+, 1.30.270.921/2200

Pushbutton 1.30.270.921/2200		
Manufacturer	RAFI	Example image 
Type	RAFIX 22 FS+	
Manufacturer number	1.30.270.921/2200	
Quantity	1	
Form of lens	Flat lens	
Contact function	Momentary	
Service life (switching cycles)	1,000,000	
B10 value (switching cycles)	1,300,000	

Table 129: Pushbutton 1.30.270.921/2200

A.G.9.2.2 Colored lens RAFIX 22 FS+, 5.49.263.062/1000

Colored lens 5.49.263.062/1000		
Manufacturer	RAFI	Example image
Type	RAFIX 22 FS+	
Manufacturer number	5.49.263.062/1000	
Quantity	1	
Form of lens	Flat lens	
Lens color	Colorless	

Table 130: Colored lens 5.49.263.062/1000

A.G.9.2.3 Colored lens RAFIX 22 FS+, 5.49.263.062/1300

Colored lens 5.49.263.062/1300		
Manufacturer	RAFI	Example image 
Type	RAFIX 22 FS+	
Manufacturer number	5.49.263.062/1300	
Quantity	1	
Form of lens	Flat lens	
Lens color	Red	

Table 131: Colored lens 5.49.263.062/1300

A.G.9.2.4 Colored lens RAFIX 22 FS+, 5.49.263.062/1400

Colored lens 5.49.263.062/1400		
Manufacturer	RAFI	Example image 
Type	RAFIX 22 FS+	
Manufacturer number	5.49.263.062/1400	
Quantity	1	
Form of lens	Flat lens	
Lens color	Yellow	

Table 132: Colored lens 5.49.263.062/1400

A.G.9.2.5 Colored lens RAFIX 22 FS+, 5.49.263.062/1500

Colored lens 5.49.263.062/1500		
Manufacturer	RAFI	Example image 
Type	RAFIX 22 FS+	
Manufacturer number	5.49.263.062/1500	
Quantity	1	
Form of lens	Flat lens	
Lens color	Green	

Table 133: Colored lens 5.49.263.062/1500

A.G.9.2.6 Colored lens RAFIX 22 FS+, 5.49.263.062/1600

Colored lens 5.49.263.062/1600		
Manufacturer	RAFI	Example image 
Type	RAFIX 22 FS+	
Manufacturer number	5.49.263.062/1600	
Quantity	1	
Form of lens	Flat lens	
Lens color	Blue	

Table 134: Colored lens 5.49.263.062/1600

A.G.9.2.7 Switching element RAFIX FS, 1.20.126.101/9000

Switching element 1.20.126.101/9000		
Manufacturer	RAFI	Example image 
Type	RAFIX FS	
Manufacturer number	1.20.126.101/9000	
Quantity	1	
Contact system	Self-cleaning bridge contact	
Contacts	1 normally closed contact	
Normally closed contact with direct opening action per IEC 947-5-1	Yes	
Connection	Connector 2.8x0.8 mm	
Lamp	LED clip	
Service life (switching cycles)	1,000,000	
B10 value (switching cycles)	1,300,000	
Min. AC/DC operating voltage	5 V	
Max. AC/DC operating voltage	35 V	
Min. AC/DC operating current	1 mA	
Max. AC/DC operating current	100 mA	
Max. switching capacity	250 mW	

Table 135: Switching element 1.20.126.101/9000

A.G.9.3 5ACCSE00.0000-002

General information

- 1x pushbutton
- 1x colored lens (no color, red, yellow, green, blue)
- 1x switching element
- 1x LED

A.G.9.3.1 Pushbutton RAFIX 22 FS+, 1.30.270.921/2200

Pushbutton 1.30.270.921/2200		
Manufacturer	RAFI	Example image 
Type	RAFIX 22 FS+	
Manufacturer number	1.30.270.921/2200	
Quantity	1	
Form of lens	Flat lens	
Contact function	Momentary	
Service life (switching cycles)	1,000,000	
B10 value (switching cycles)	1,300,000	

Table 136: Pushbutton 1.30.270.921/2200

A.G.9.3.2 Colored lens RAFIX 22 FS+, 5.49.263.062/1000

Colored lens 5.49.263.062/1000		
Manufacturer	RAFI	Example image
Type	RAFIX 22 FS+	
Manufacturer number	5.49.263.062/1000	
Quantity	1	
Form of lens	Flat lens	
Lens color	Colorless	

Table 137: Colored lens 5.49.263.062/1000

A.G.9.3.3 Colored lens RAFIX 22 FS+, 5.49.263.062/1300

Colored lens 5.49.263.062/1300		
Manufacturer	RAFI	Example image 
Type	RAFIX 22 FS+	
Manufacturer number	5.49.263.062/1300	
Quantity	1	
Form of lens	Flat lens	
Lens color	Red	

Table 138: Colored lens 5.49.263.062/1300

A.G.9.3.4 Colored lens RAFIX 22 FS+, 5.49.263.062/1400

Colored lens 5.49.263.062/1400		
Manufacturer	RAFI	Example image 
Type	RAFIX 22 FS+	
Manufacturer number	5.49.263.062/1400	
Quantity	1	
Form of lens	Flat lens	
Lens color	Yellow	

Table 139: Colored lens 5.49.263.062/1400

A.G.9.3.5 Colored lens RAFIX 22 FS+, 5.49.263.062/1500

Colored lens 5.49.263.062/1500		
Manufacturer	RAFI	Example image 
Type	RAFIX 22 FS+	
Manufacturer number	5.49.263.062/1500	
Quantity	1	
Form of lens	Flat lens	
Lens color	Green	

Table 140: Colored lens 5.49.263.062/1500

A.G.9.3.6 Colored lens RAFIX 22 FS+, 5.49.263.062/1600

Colored lens 5.49.263.062/1600		
Manufacturer	RAFI	Example image 
Type	RAFIX 22 FS+	
Manufacturer number	5.49.263.062/1600	
Quantity	1	
Form of lens	Flat lens	
Lens color	Blue	

Table 141: Colored lens 5.49.263.062/1600

A.G.9.3.7 Switching element RAFIX 22 FS, 1.20.126.103/9000

Switching element 1.20.126.103/9000		
Manufacturer	RAFI	Example image 
Type	RAFIX 22 FS	
Manufacturer number	1.20.126.103/9000	
Quantity	1	
Contact system	Self-cleaning bridge contact	
Contacts	1 normally closed contact + 1 normally open contact	
Connection	Connector 2.8x0.8 mm	
Service life (switching cycles)	1,000,000 at 10 mA / 24 VDC	
Min. AC/DC operating voltage	5 V	
Max. AC/DC operating voltage	42 V	
Min. AC/DC operating current	1 mA	
Max. AC/DC operating current	100 mA	
Max. switching capacity	250 mW	

Table 142: Switching element 1.20.126.103/9000

A.G.9.4 5ACCSE00.0001-000

General information

- 1x emergency stop button
- 1x switching element

A.G.9.4.1 Emergency stop RAFIX 22 FS+ "Plus 1", 1.30.273.512/0300

Emergency stop 1.30.273.512/0300		
Manufacturer	RAFI	Example image
Type	RAFIX 22 FS+ emergency stop button "Plus 1"	
Manufacturer number	1.30.273.512/0300	
Quantity	1	
Contact function	Maintained	
Resetting	By rotating to the right	
Service life (switching cycles)	50,000	
B10 value (switching cycles)	65,000	

Table 143: Emergency stop 1.30.273.512/0300

A.G.9.4.2 Switching element RAFIX 22 FS+ "Plus 1", 1.20.126.514/0000

Switching element 1.20.126.514/0000		
Manufacturer	RAFI	Example image
Type	RAFIX 22 FS+ "Plus 1"	
Manufacturer number	1.20.126.514/0000	
Quantity	1	
Contact system	Self-cleaning bridge contact	
Contacts	2 normally closed contact + 1 normally open contact	
Normally closed contact with positive separation per IEC 60947-5-1	Yes	
Connection	Connector 2.8x0.8 mm	
Service life (switching cycles)	50,000 at 10 mA / 24 VDC	
B10 value (switching cycles)	65,000	
Min. AC/DC operating voltage	5 V	
Max. AC/DC operating voltage	42 V	
Min. AC/DC operating current	1 mA	
Max. AC/DC operating current	100 mA	
Max. switching capacity	250 mW	

Table 144: Switching element 1.20.126.514/0000

A.G.9.5 5ACCSE00.0002-000

General information

- 1x key switch
- 1x switching element

A.G.9.5.1 Key switch RAFIX 22 FS+, 1.30.255.432/0000

Key switch 1.30.255.432/0000		
Manufacturer	RAFI	Example image
Type	RAFIX 22 FS+	
Manufacturer number	1.30.255.432/0000	
Quantity	1	
Contact function	Maintained	
Number of possible closings	500	
Angle of rotation	2x 90°	
Key removal position	0+1+2	
Service life	50,000 maintained / 30,000 key removal switching cycles	
B10 value	65,000 maintained / 40,000 key removal switching cycles	

Table 145: Key switch 1.30.255.432/0000

A.G.9.5.1.1 Replacement key for key switch RAFIX 22 FS+ 5.58.007.001/0000

Replacement key 5.58.007.001/0000		
ROHS-compliant	Yes	Example image
REACH-compliant	Yes	

A.G.9.5.2 Switching element RAFIX 22 FS, 1.20.126.105/9000

Switching element 1.20.126.105/9000		
Manufacturer	RAFI	Example image
Type	RAFIX 22 FS	
Manufacturer number	1.20.126.105/9000	
Quantity	1	
Contact system	Self-cleaning bridge contact	
Contacts	2 normally open contacts	
Normally closed contact with direct opening action per IEC 947-5-1	Yes	
Connection	Connector 2.8x0.8 mm	
Service life (switching cycles)	1,000,000	
Min. AC/DC operating voltage	5 V	
Max. AC/DC operating voltage	35 V	
Min. AC/DC operating current	1 mA	
Max. AC/DC operating current	100 mA	
Max. switching capacity	250 mW	

Table 146: Switching element 1.20.126.105/9000

A.G.9.6 5ACCSE00.0003-000

- 1x key switch
- 1x switching element

A.G.9.6.1 Key switch RAFIX 22 FS+, 1.30.255.222/0000

Key switch 1.30.255.222/0000		
Manufacturer	RAFI	Example image
Type	RAFIX 22 FS+	
Manufacturer number	1.30.255.222/0000	
Contact function	Maintained	
Number of possible closings	500	
Angle of rotation	1 x 90°, L form	
Key removal position	0+1	
Service life (switching cycles)	50,000 maintained / 30,000 key removal switching cycles	
B10 value (switching cycles)	65,000 maintained / 40,000 key removal switching cycles	
Actuation torque	Max. 1.3 Nm	

Table 147: Key switch 1.30.255.222/0000

A.G.9.6.1.1 Replacement key for key switch RAFIX 22 FS+ 5.58.007.001/0000

Replacement key 5.58.007.001/0000		
ROHS-compliant	Yes	Example image
REACH-compliant	Yes	

A.G.9.6.2 Switching element RAFIX 22 FS, 1.20.126.103/9000

Switching element 1.20.126.103/9000		
Manufacturer	RAFI	Example image
Type	RAFIX 22 FS	
Manufacturer number	1.20.126.103/9000	
Quantity	1	
Contact system	Self-cleaning bridge contact	
Contacts	1 normally closed contact + 1 normally open contact	
Connection	Connector 2.8x0.8 mm	
Service life (switching cycles)	1,000,000 at 10 mA / 24 VDC	
Min. AC/DC operating voltage	5 V	
Max. AC/DC operating voltage	42 V	
Min. AC/DC operating current	1 mA	
Max. AC/DC operating current	100 mA	
Max. switching capacity	250 mW	

Table 148: Switching element 1.20.126.103/9000

A.G.9.7 5ACCSE00.0004-000

General information

- 1x selector switch
- 1x switching element

A.G.9.7.1 Selector switch RAFIX 22 FS+, 1.30.272.102/2200

Selector switch 1.30.272.102/2200		
Manufacturer	RAFI	Example image
Type	RAFIX 22 FS+	
Manufacturer number	1.30.272.102/2200	
Illumination	White	
Contact function	Maintained	
Angle of rotation	1 x 90°, L form	
Service life (switching cycles)	300,000	
B10 value (switching cycles)	400,000	
Actuation torque	Max. 1.5 Nm	

Table 149: Selector switch 1.30.272.102/2200

A.G.9.7.2 Switching element RAFIX FS, 1.20.126.102/9000

Switching element 1.20.126.102/9000		
Manufacturer	RAFI	
Type	RAFIX FS	
Manufacturer number	1.20.126.102/9000	
Quantity	1	Example image
Contact system	Self-cleaning bridge contact	
Contacts	1 normally open contact	
Normally closed contact with direct opening action per IEC 947-5-1	Yes	
Connection	Connector 2.8x0.8 mm	
Lamp	LED clip	
Service life (switching cycles)	1,000,000	
B10 value (switching cycles)	1,300,000	
Min. AC/DC operating voltage	5 V	
Max. AC/DC operating voltage	35 V	
Min. AC/DC operating current	1 mA	
Max. AC/DC operating current	100 mA	
Max. switching capacity	250 mW	

Table 150: Switching element 1.20.126.102/9000

A.G.9.8 5ACCSE00.0005-000

A.G.9.8.1 USB extension RAFIX 22 FS+, 9.30.279.003/0700

Caution!

IP65 protection can only be achieved if the USB protective cover is properly installed.

Caution!

Due to the general PC specification, this interface must be handled with the utmost care with regard to EMC, cable routing, etc.

USB extension 9.30.279.003/0700			
Manufacturer		RAFI	
Type		RAFIX 22 FS+	
Manufacturer number		9.30.279.003/0700	
Standard		USB 2.0	
Variant		Type A, female	
Transfer rate		Low speed (1.5 Mbit/s)	
		Full speed (12 Mbit/s)	
		High speed (480 Mbit/s)[1)]	
Current-carrying capacity[2)]		Max. 500 mA	
Cable length			
	USB 2.0	400 mm	

Table 151: USB extension 9.30.279.003/0700

1) In SDL operation without USB cable (mode 1), the USB transfer rate is limited to USB 1.1.
In SDL3 operation: Low speed (1.5 Mbit/s), full speed (12 Mbit/s) to high speed (30 Mbit/s)
In SDL4 operation: Low speed (1.5 Mbit/s), full speed (12 Mbit/s) to high speed (150 Mbit/s)

2) The USB interface is protected by a maintenance-free "USB current-limiting switch" (max. 500 mA).

A.H Abbreviations

Abbreviations used in the document are explained here.

Abbreviation	Stands for	Description
NC	Normally closed	Stands for a normally closed relay contact.
	Not connected	Used in pinout descriptions if a terminal or pin is not connected on the module side.
ND	Not defined	Stands for an undefined value in technical data tables. This may be because the cable manufacturer has not provided a value for certain technical data.
NO	Normally open	Stands for a normally open relay contact.
TBD	To be defined	Used in technical data tables if there is currently no value for specific technical data. The value will be supplied later.
MTBF	Mean time between failures	The expected value of the operating time between two consecutive failures.