Panel PC 900

User's Manual

Version: **1.06 (July 2014)**
Model no.: **MAPPC900-ENG**

Chapter 1 • General information

1 Manual history

Version	Date	Change
1.00	19-Dec-13	• First version
1.05	2014-04-16	• Updated section "Maximum ambient temperature during operation" on page 27. • Updated vibration and shock specifications of the complete system for storage and transport, see page 33. • Corrected the technical data for ambient temperature and humidity for the following drives: "5AC901.CSSD-03" on page 85, "5AC901.CSSD-04" on page 88, "5AC901.CSSD-05" on page 91, "5MMSSD.0060-01" on page 93, "5MMSSD.0128-01" on page 96, "5MMSSD.0256-00" on page 99. • Updated ready relay IF option "5AC901.IRDY-00" on page 114. • Updated service life diagram for the "5AC901.BUPS-00"and "5AC901.BUPS-01" battery units. • Updated section "Serial number sticker" on page 55. • Updated section "Installation information for individual components" on page 132. • Updated section "Chemical resistance" on page 285. • Updated section "Touch screen" on page 287.
1.06	2014-07-25	• Corrected technical data for bus units with PCI Express slots, corrected PCIe standard and bus speed, see "Technical data" on page 80. • Updated bus unit 5AC902.BX02-02, see "Bus units" on page 79. • Documented new revision of CFast cards, see "CFast cards" on page 253. • Table 13 "Ambient temperature without a fan kit" on page 28 was updated. • Table 23 "CPU board - Power calculation" on page 35 was corrected.

Table 1: Manual history

2 Safety guidelines

2.1 Intended use

Programmable logic controllers (PLCs), operating/monitoring devices (industrial PCs, Power Panels, Mobile Panels, etc.) and B&R uninterruptible power supplies have been designed, developed and manufactured for conventional use in industrial environments. They were not designed, developed and manufactured for any use involving serious risks or hazards that could lead to death, injury, serious physical damage or loss of any kind without the implementation of exceptionally stringent safety precautions. In particular, such risks and hazards include the use of these devices to monitor nuclear reactions in nuclear power plants, their use in flight control or flight safety systems as well as in the control of mass transportation systems, medical life support systems or weapons systems.

2.2 Protection against electrostatic discharge

Electrical components that can be damaged by electrostatic discharge (ESD) must be handled accordingly.

2.2.1 Packaging

- **Electrical components with a housing**
  ...Do not require special ESD packaging but must be handled properly (see "Electrical components with a housing").
- **Electrical components without a housing**
  …Must be protected by ESD-suitable packaging.

2.2.2 Guidelines for proper ESD handling

Electrical components with a housing

- Do not touch the connector contacts on connected cables.
- Do not touch the contact tips on circuit boards.

Electrical components without a housing

The following applies in addition to the points listed under "Electrical components with a housing":

- Any persons handling electrical components or devices with installed electrical components must be grounded.
- Components may only be touched on their narrow sides or front plate.
- Components should always be stored in a suitable medium (ESD packaging, conductive foam, etc.). Metallic surfaces are not suitable storage surfaces!
- Components should not be subjected to electrostatic discharge (e.g. through the use of charged plastics).
- Ensure a minimum distance of 10 cm from monitors and TV sets.
- Measurement devices and equipment must be grounded.
- Measurement probes on potential-free measurement devices must be discharged on sufficiently grounded surfaces before taking measurements.

Individual components

- ESD protective measures for individual components are thoroughly integrated at B&R (conductive floors, footwear, arm bands, etc.).
- These increased ESD protective measures for individual components are not necessary for customers handling B&R products.

2.3 Policies and procedures

Electronic devices are never completely failsafe. If the programmable control system, operating/monitoring device or uninterruptible power supply fails, the user is responsible for ensuring that other connected devices, e.g. motors, are brought to a secure state.

When using programmable logic controllers or operating/monitoring devices as control systems together with a soft PLC (e.g. B&R Automation Runtime or comparable product) or slot PLC (e.g. B&R LS251 or comparable product), safety precautions relevant to industrial control systems (e.g. the provision of safety devices such as emergency stop circuits, etc.) must be observed in accordance with applicable national and international regulations. The same applies for all other devices connected to the system, such as drives.

All tasks such as the installation, commissioning and servicing of devices are only permitted to be carried out by qualified personnel. Qualified personnel are those familiar with the transport, mounting, installation, commissioning and operation of devices who also have the appropriate qualifications (e.g. IEC 60364). National accident prevention regulations must be observed.
The safety notices, connection descriptions (type plate and documentation) and limit values listed in the technical data are to be read carefully before installation and commissioning and must be observed.

2.4 Transport and storage

During transport and storage, devices must be protected against undue stress (mechanical loads, temperature, humidity, aggressive atmospheres, etc.).

2.5 Installation

- Installation must be performed according to this documentation using suitable equipment and tools.
- Devices may only be installed by qualified personnel without voltage applied. Before installation, voltage to the control cabinet must be switched off and prevented from being switched on again.
- General safety guidelines and national accident prevention regulations must be observed.
- Electrical installation must be carried out according to applicable guidelines (e.g. line cross sections, fuses, protective ground connections).

2.6 Operation

2.6.1 Protection against touching electrical parts

To operate programmable logic controllers, operating/monitoring devices or uninterruptible power supplies, it is necessary for certain parts to carry dangerous voltage levels over 42 VDC. Touching one of these parts can result in a life-threatening electric shock. This could lead to death, severe injury or damage to equipment.

Before turning on the programmable logic controller, operating/monitoring devices or the uninterruptible power supply, the housing must be properly grounded (PE rail). Ground connections must be established even when testing or operating operating/monitoring devices or the uninterruptible power supply for a short time!

Before turning the device on, all parts that carry voltage must be securely covered. During operation, all covers must remain closed.

2.6.2 Environmental conditions - Dust, humidity, aggressive gases

The use of operating/monitoring devices (e.g. industrial PCs, Power Panels, Mobile Panels, etc.) and uninterruptible power supplies in very dusty environments should be avoided. Dust collection on the devices can affect functionality and may prevent sufficient cooling, especially in systems with active cooling systems (fans).

The presence of aggressive gases can also lead to malfunctions. When combined with high temperature and humidity, aggressive gases – e.g. with sulfur, nitrogen and chlorine components – can induce chemical reactions that can damage electronic components very quickly. Signs of the presence of aggressive gases are blackened copper surfaces and cable ends on existing equipment.

For operation in dusty or humid conditions, correctly installed (e.g. cutout installations) operating/monitoring devices like the Automation Panel or Power Panel are protected on the front. The back of all devices must be protected from dust and humidity and cleaned at suitable intervals.

2.6.3 Viruses and dangerous programs

This system is subject to potential risk each time data is exchanged or software is installed from a data medium (e.g. diskette, CD-ROM, USB flash drive, etc.), a network connection or the Internet. The user is responsible for assessing these dangers, implementing preventive measures such as virus protection programs, firewalls, etc. and making sure that software is only obtained from trusted sources.

2.7 Environmentally friendly disposal

All B&R programmable controllers, operating/monitoring devices and uninterruptible power supplies are designed to inflict as little harm as possible on the environment.

2.7.1 Separation of materials

It is necessary to separate different materials so the device can undergo an environmentally friendly recycling process.

Component	Disposal
Programmable logic controllers Operating/monitoring devices Uninterruptible power supply Batteries and rechargeable batteries Cables	Electronics recycling
Cardboard box / paper packaging	Paper / cardboard recycling
Plastic packaging	Plastic recycling

Table 2: Environmentally friendly separation of materials

Disposal must comply with applicable legal regulations.

3 Organization of safety notices

Safety notices in this manual are organized as follows:

Safety notice	Description
Danger!	Disregarding these safety guidelines and notices can be life-threatening.
Warning!	Disregarding these safety guidelines and notices can result in severe injury or substantial damage to equipment.
Caution!	Disregarding these safety guidelines and notices can result in injury or damage to equipment.
Information:	This information is important for preventing errors.

Table 3: Description of the safety notices used in this documentation

4 Guidelines

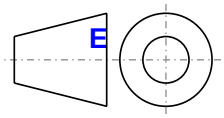

European dimension standards apply to all dimension diagrams in this document.

All dimensions are specified in mm.

Range of nominal sizes	General tolerance according to DIN ISO 2768 (medium)
Up to 6 mm	±0.1 mm
For 6 to 30 mm	±0.2 mm
For 30 to 120 mm	±0.3 mm
For 120 to 400 mm	±0.5 mm
For 400 to 1000 mm	±0.8 mm

Table 4: Range of nominal sizes

5 Overview

Product ID	Short description	on page
	Automation Runtime	
1A4600.10-5	B&R Automation Runtime ARwin, including license sticker	246
1A4601.06-5	B&R Automation Runtime ARemb, including license sticker	246
	Batteries	
0AC201.91	Lithium batteries 4 pcs., 3 V / 950 mAh button cell We hereby state that the lithium cells contained in this shipment qualify as "partly regulated". Handle with care. If the package is damaged, inspect the cells, repack intact cells and protect the cells against short circuit. For emergency information, call RENATA SA at +41 61 319 28 27.	252
4A0006.00-000	Lithium battery, 3 V / 950 mAh, button cell	252
	Bus units	
5AC902.BX01-00	PPC900 bus unit, 1-slot - 1 PCI - 1 slide-in	80
5AC902.BX01-01	PPC900 bus unit, 1-slot - 1 PCI Express x8 - 1 slide-in	80
5AC902.BX02-00	PPC900 bus unit, 2-slot - 2 PCI - 1 slide-in	80
5AC902.BX02-01	PPC900 2-slot bus unit - 1 PCI - 1 PCI Express x8 - 1 slide-in	80
5AC902.BX02-02	PPC900 bus unit, 2-slot - 2 PCI Express x4 - 1 slide-in	80
	CFast cards	
5CFAST.016G-00	CFast card, 16 GB	253
5CFAST.032G-00	CFast card, 32 GB	253
5CFAST.2048-00	CFast card, 2 GB	253
5CFAST.4096-00	CFast card, 4 GB	253
5CFAST.8192-00	CFast card, 8 GB	253
	CPU boards	
5PC901.TS77-00	CPU board Intel Core i7 3615QE 2.3 GHz - Quad core - QM77 chipset - For Panel PC 900	70
5PC901.TS77-01	CPU board Intel Core i7 3612QE 2.1 GHz - Quad core - QM77 chipset - For Panel PC 900	70
5PC901.TS77-02	CPU board Intel Core i7 3555LE 2.5 GHz - Dual core - QM77 chipset - For Panel PC 900	70
5PC901.TS77-03	CPU board Intel Core i7 3517UE 1.7 GHz - Dual core - QM77 chipset - For Panel PC 900	70
5PC901.TS77-04	CPU board Intel Core i5 3610ME 2.7 GHz - Dual core - QM77 chipset - For Panel PC 900	70
5PC901.TS77-05	CPU board Intel Core i3 3120ME 2.4 GHz - Dual core - QM77 chipset - For Panel PC 900	70
5PC901.TS77-06	CPU board Intel Core i3 3217UE 1.6 GHz - Dual core - QM77 chipset - For Panel PC 900	70
5PC901.TS77-07	CPU board Intel Celeron 847E 1.1 GHz - Dual core - HM76 chipset - For Panel PC 900	73
5PC901.TS77-08	CPU board Intel Celeron 827E 1.4 GHz - Single core - HM76 chipset - For Panel PC 900	73
5PC901.TS77-09	CPU board Intel Celeron 1020E 2.2 GHz - Dual core - HM76 chipset - For Panel PC 900	73
5PC901.TS77-10	CPU board Intel Celeron 1047UE 1.4 GHz - Dual core - HM76 chipset - For Panel PC 900	73
	DVI cables	
5CADVI.0018-00	DVI-D cable, 1.8 m	260
5CADVI.0050-00	DVI-D cable, 5 m	260
5CADVI.0100-00	DVI-D cable, 10 m	260
	Display units	
5AP923.1215-00	Automation Panel 12.1" XGA TFT - 1024 x 768 pixels (4:3) - Single-touch (analog resistive) - IP65 protection (front)	56
5AP923.1505-00	Automation Panel 15.0" XGA TFT - 1024 x 768 pixels (4:3) - Single-touch (analog resistive) - IP65 protection (front)	58
5AP923.1906-00	Automation Panel 19.0" SXGA TFT - 1280 x 1024 pixels (4:3) - Single-touch (analog resistive) - IP65 protection (front)	60
5AP933.156B-00	Automation Panel 15.6" HD TFT - 1366 x 768 pixels (16:9) - Multi-touch (projected capacitive) - IP65 protection (front)	62
5AP933.185B-00	Automation Panel 18.5" HD TFT - 1366 x 768 pixels (16:9) - Multi-touch (projected capacitive) - IP65 protection (front)	64
5AP933.215C-00	Automation Panel 21.5" Full HD TFT - 1920 x 1080 pixels (16:9) - Multi-touch (projected capacitive) - IP65 protection (front)	66
5AP933.240C-00	Automation Panel 24.0" Full HD TFT - 1920 x 1080 pixels (16:9) - Multi-touch (projected capacitive) - IP65 protection (front)	68
	Drives	
5AC901.CCFA-00	CFast adapter for operating a CFast card in a slide-in compact slot	101
5AC901.CHDD-01	500 GB SATA hard disk, slide-in compact, 24/7 operation Note: please see the manual for information about using this hard disk	83
5AC901.CSSD-03	60 GB SATA slide-in compact SSD (MLC)	85
5AC901.CSSD-04	128 GB SATA SSD (MLC), slide-in compact	88
5AC901.CSSD-05	256 GB SSD MLC - Slide-in compact - Toshiba - SATA	91
5AC901.SDVW-00	DVD-R/RW DVD+R/RW SATA slide-in drive	102
5AC901.SSCA-00	Slide-in compact adapter for operating a slide-in compact drive in a slide-in slot.	104
5MMSSD.0060-01	60 GB SATA SSD (MLC); replacement for 5AC801.SSDI-03 and 5AC901.CSSD-03; SSD for 5PP5IO.GMAC-00; note: please see the manual for information about using this SSD	93
5MMSSD.0128-01	128 GB SATA SSD (MLC); replacement for 5AC801.SSDI-04 and 5AC901.CSSD-04; SSD for 5PP5IO.GMAC-00; note: please see the manual for information about using this SSD	96
5MMSSD.0256-00	256 GB SSD MLC - Slide-in compact - Toshiba - SATA	99
	Fan kit	
5AC902.FA00-00	PPC900 fan kit - For 5PC911.SX00-00	81
5AC902.FA0X-00	PPC900 fan kit - For PPC900 bus unit	82
	Interface options	
5AC901.I485-00	RS232/422/485 interface option; for installation in an APC910 or PPC900	105
5AC901.ICAN-00	CAN interface option; for installation in an APC910 or PPC900	109
5AC901.IHDA-00	Audio interface option; connection for 1x MIC, 1x Line IN, 1x Line OUT; for installation in an APC910	112
5AC901.IRDY-00	Ready relay interface option; for APC910	114
5AC901.ISRM-00	SRAM interface option, 2 MB; for installation in an APC910 or PPC900	111

Product ID	Short description	on page
	Main memory	
5MMDDR.1024-03	SO-DIMM DDR3, 1024 MB	78
5MMDDR.2048-03	SO-DIMM DDR3, 2048 MB	78
5MMDDR.4096-03	SO-DIMM DDR3, 4096 MB	78
5MMDDR.8192-03	SO-DIMM DDR3, 8192 MB	78
	Power supply	
5AC902.PS00-00	PPC900 power supply 85-264 VAC	129
	RS232 cables	
9A0014.02	RS232 extension cable for remote operation of a display unit with touch screen, 1.8 m	277
9A0014.05	RS232 extension cable for remote operation of a display unit with touch screen, 5 m	277
9A0014.10	RS232 extension cable for remote operation of a display unit with touch screen, 10 m	277
	SDL cables	
5CASDL.0018-00	SDL cable, 1.8 m	263
5CASDL.0050-00	SDL cable, 5 m	263
5CASDL.0100-00	SDL cable, 10 m	263
5CASDL.0150-00	SDL cable, 15 m	263
5CASDL.0200-00	SDL cable, 20 m	263
5CASDL.0250-00	SDL cable, 25 m	263
5CASDL.0300-00	SDL cable, 30 m	263
	SDL cables with 45° connectors	
5CASDL.0018-01	SDL cable with 45° male connector, 1.8 m	266
5CASDL.0050-01	SDL cable with 45° male connector, 5 m	266
5CASDL.0100-01	SDL cable with 45° male connector, 10 m	266
5CASDL.0150-01	SDL cable with 45° male connector, 15 m	266
	SDL flex cables	
5CASDL.0018-03	SDL flex cable, 1.8 m	269
5CASDL.0050-03	SDL flex cable, 5 m	269
5CASDL.0100-03	SDL flex cable, 10 m	269
5CASDL.0150-03	SDL flex cable, 15 m	269
5CASDL.0200-03	SDL flex cable, 20 m	269
5CASDL.0250-03	SDL flex cable, 25 m	269
5CASDL.0300-03	SDL flex cable, 30 m	269
5CASDL.0300-13	SDL flex cable with extender, 30 m	272
5CASDL.0400-13	SDL flex cable with extender, 40 m	272
5CASDL.0430-13	SDL flex cable with extender, 43 m	272
	System units	
5PC911.SX00-00	PPC900 active system unit	76
5PC911.SX00-01	PPC900 passive system unit	77
	Terminal blocks	
0TB103.9	Connector, 24 VDC, 3-pin female, 3.31 mm² screw clamps, protected against vibration by the screw flange	250
0TB103.91	Connector, 24 VDC, 3-pin female, 3.31 mm² cage clamps, protected against vibration by the screw flange	250
0TB3103.8000	Connector, 230 VAC, 3-pin female, 4 mm² screw clamp, protected against vibration by the screw flange	251
	USB accessories	
5MMUSB.2048-01	USB 2.0 flash drive, 2048 MB, B&R	258
5MMUSB.4096-01	USB 2.0 flash drive, 4096 MB, B&R	258
	USB cables	
5CAUSB.0018-00	USB 2.0 connection cable type A - type B, 1.8 m	276
5CAUSB.0050-00	USB 2.0 connection cable type A - type B, 5 m	276
	Uninterruptible power supplies	
5AC901.BUPS-00	Battery unit 4.5 Ah; for UPS 5AC901.IUPS-00	120
5AC901.BUPS-01	Battery unit 2.2 Ah; for UPS 5AC901.IUPS-01	124
5AC901.IUPS-00	UPS interface option; for installation in an APC910 or PPC900; for 4.5 Ah battery	116
5AC901.IUPS-01	UPS interface option; for installation in an APC910 or PPC900; for 2.2 Ah battery	118
5CAUPS.0005-01	UPS cable 0.5 m; for 5AC901.IUPS-00 and 5AC901.IUPS-01 UPS	128
5CAUPS.0010-01	UPS cable 1 m; for 5AC901.IUPS-00 and 5AC901.IUPS-01 UPS	128
5CAUPS.0030-01	UPS cable 3 m; for 5AC901.IUPS-00 and 5AC901.IUPS-01 UPS	128
	Windows 7 Professional/Ultimate	
5SWWI7.1100-ENG	Microsoft OEM Windows 7 Professional 32-bit, Service Pack 1, DVD, English. Only available with a new device.	238
5SWWI7.1100-GER	Microsoft OEM Windows 7 Professional 32-bit, Service Pack 1, DVD, German. Only available with a new device.	238
5SWWI7.1200-ENG	Microsoft OEM Windows 7 Professional 64-bit, Service Pack 1, DVD, English. Only available with a new device.	238
5SWWI7.1200-GER	Microsoft OEM Windows 7 Professional 64-bit, Service Pack 1, DVD, German. Only available with a new device.	238
5SWWI7.1300-MUL	Microsoft OEM Windows 7 Ultimate 32-bit, Service Pack 1, DVD, multilingual. Only available with a new device.	238
5SWWI7.1400-MUL	Microsoft OEM Windows 7 Ultimate 64-bit, Service Pack 1, DVD, multilingual. Only available with a new device.	238
	Windows Embedded Standard 2009	
5SWWXP.0741-ENG	Windows Embedded Standard 2009 - English - For PPC900 with QM77/HM76 chipset	244
	Windows Embedded Standard 7	
5SWWI7.1541-ENG	Windows Embedded Standard 7 SP1 - 32-bit - English - For PPC900 with QM77/HM76 chipset - License	240
5SWWI7.1641-ENG	Windows Embedded Standard 7 SP1 - 64-bit - English - For PPC900 with QM77/HM76 chipset - License	240
5SWWI7.1741-MUL	Windows Embedded Standard 7 Premium SP1 - 32-bit - Multilingual - For PPC900 with QM77/HM76 chipset - License	240
5SWWI7.1841-MUL	Windows Embedded Standard 7 Premium SP1 - 64-bit - Multilingual - For PPC900 with QM77/HM76 chipset - License	240
	Windows XP Professional	
5SWWXP.0600-ENG	Microsoft OEM Windows XP Professional Service Pack 3, CD, English. Only available with a new device.	242
5SWWXP.0600-GER	Microsoft OEM Windows XP Professional Service Pack 3, CD, German. Only available with a new device.	242

Product ID	Short description	on page
5SWWXP.0600-MUL	Microsoft OEM Windows XP Professional Service Pack 3, CD, multilingual. Only available with a new device.	242

Chapter 2 • Technical data

1 Introduction

1.1 About this user's manual

This user's manual contains all relevant information about a functioning Panel PC 900.

1.2 Description of individual modules

1.2.1 Display units

Display units consist of a display and touch screen and form the basis for each Automation Panel 9x3, Panel PC 900 and Panel PC 2100 system family. Different display sizes and touch screen technologies are available. These display units can be operated exclusively as a complete system together with a link module (Automation Panel 9x3) or CPU board and system unit (Panel PC 900, Panel PC 2100).
Model numbers for display units with single-touch technology begin with 5AP923.xxxx-xx; those for display units with multi-touch technology begin with 5AP933.xxxx-xx.

1.2.2 CPU board and system unit

The CPU board integrates all of the PPC900's interfaces and also allows interface options, slide-in compact drives and CFast cards to be inserted.

A system unit consists of an anthracite gray housing and a heat sink. There are both passive variants (without a fan kit) and active variants (with a fan kit) available.

A functioning Panel PC 900 is put together by installing a system unit, main memory and mass storage device in a display unit. Panel PC 900 systems are mounted using retaining clips.

A CPU board and system unit cannot function without a display unit.

1.3 Structure/Configuration

Automation Panel 9x3, Panel PC900 and Panel PC 2100 systems can be assembled to meet individual requirements and operating conditions. Automation Panel 9x3 and Panel PC 900 systems are so flexible that an Automation Panel can be rebuilt into a Panel PC and a Panel PC into an Automation Panel.

1.3.1 Configuration

The following components are absolutely essential for operation as a Panel PC 900:

- Display unit
- CPU board
- System unit
- Main memory
- Fan kit[1)]
- Drive (mass storage device such as CFast card or hard disk) for the operating system
- Software

Panel PC 900 system can be operated with or without a fan kit. This choice plays a role in determining the various types of housing to be used.

Using a fan kit allows for operation at higher ambient temperatures. More information can be found under "Maximum ambient temperature during operation" on page 27.

Configuration - Base system		
Display unit	Select 1	
	5AP923.1215-00 12.1" XGA single-touch 5AP923.1505-00 15.0" XGA single-touch 5AP923.1906-00 19.0" SXGA single-touch 5AP933.156B-00 15.6" HD multi-touch 5AP933.185B-00 18.5" HD multi-touch 5AP933.215C-00 21.5" FHD multi-touch 5AP933.240C-00 24.0" FHD multi-touch	
CPU board - System unit - Fan kit - Main memory		
CPU board	Select 1	
	**QM77 CPU boards** 5PC901.TS77-00[1)] 5PC901.TS77-04 5PC901.TS77-01 5PC901.TS77-05 5PC901.TS77-02 5PC901.TS77-06 5PC901.TS77-03	**HM76 CPU boards** 5PC901.TS77-07 5PC901.TS77-08 5PC901.TS77-09 5PC901.TS77-10
System unit	Select 1	
	5PC911.SX00-00 Active system	5PC911.SX00-01 System, passive
Fan kit	Select 1	
	5AC902.FA00-00	
Main memory	Select one or two	
	5MMDDR.1024-03 5MMDDR.4096-03 5MMDDR.2048-03 5MMDDR.8192-03	

1) The 5PC901.TS77-00 CPU board can only be used with system unit 5PC911.SX00-00.

Figure 1: Panel PC 900 - Base system configuration

[1)] It may be necessary to use a fan kit under certain conditions. Detailed information can be found in the section "Maximum ambient temperature during operation" on page 27.

Accessory and software configuration	
Power supply	Select 1
	5AC902.PS00-00
Slide-in compact drives	Select 1
	5AC901.CHDD-01 5AC901.CSSD-03 5AC901.CSSD-04 5AC901.CSSD-05 5AC901.CCFA-00
IF options	Select max. 2 [1]
	5AC901.I485-00 5AC901.ICAN-00 5AC901.IHDA-00 5AC901.ISRM-00 5AC901.IRDY-00
UPS	Select 1 each
	**UPS module**[2] **+ Battery unit + UPS cable** 5AC901.IUPS-00 + 5AC901.BUPS-00 5CAUPS.0005-01 5AC901.IUPS-01 + 5AC901.BUPS-01 5CAUPS.0010-01 5CAUPS.0030-01
Bus unit - Slide-in drive - Fan kit	
Bus units	Select 1
	5AC902.BX01-00 Bus 1PCI 1SI 5AC902.BX01-01 Bus 1PCIe.x8 1SI 5AC902.BX02-00 Bus 2PCI 1SI 5AC902.BX02-01 Bus 1PCI 1PCIe.x8 1SI 5AC902.BX02-02 Bus 2PCIe.x4 1SI
Slide-in drives	Select max. 1
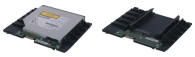	5AC901.SDVW-00 5AC901.SSCA-00
Fan kit [3]	Select max. 1
	5AC902.FA0X-00
CFast cards	Select 1
	5CFAST.2048-00 5CFAST.4096-00 5CFAST.8192-00 5CFAST.016G-00 5CFAST.032G-00
USB accessories	Select 1
	5MMUSB.2048-01 5MMUSB.4096-01
Terminal blocks	Select 1
	**DC power connector** 0TB103.9 0TB103.91 **AC power connector** 0TB3103.8000
Operating systems	Select 1
Windows 7 Windows Embedded Standard 2009 Windows Embedded Standard 7 Automation Runtime	**Windows 7** 5SWWI7.1100-ENG 5SWWI7.1100-GER 5SWWI7.1300-MUL 5SWWI7.1200-ENG 5SWWI7.1200-GER 5SWWI7.1400-MUL **Windows Embedded Standard 2009** 05SWWXP.071-ENG **Windows Embedded Standard 7** 5SWWI7.1541-ENG 5SWWI7.1641-ENG 5SWWI7.1741-MUL 5SWWI7.1841-MUL **Windows XP** 5SWWXP.0600-ENG 5SWWXP.0600-GER 5SWWXP.0600-MUL **Automation Runtime** 1A4600.10-5 1A4601.06-5

1) Certain limitations must be taken into account when using IF options. For more information, please refer to the section "Device interfaces" in Chapter 2 "Technical data".
2) The UPS module can only be operated in the IF option 1 slot.
3) If an active system unit is being used, then a fan kit must be selected for the bus unit.

Figure 2: Panel PC 900 - Accessory configuration

Configuration options

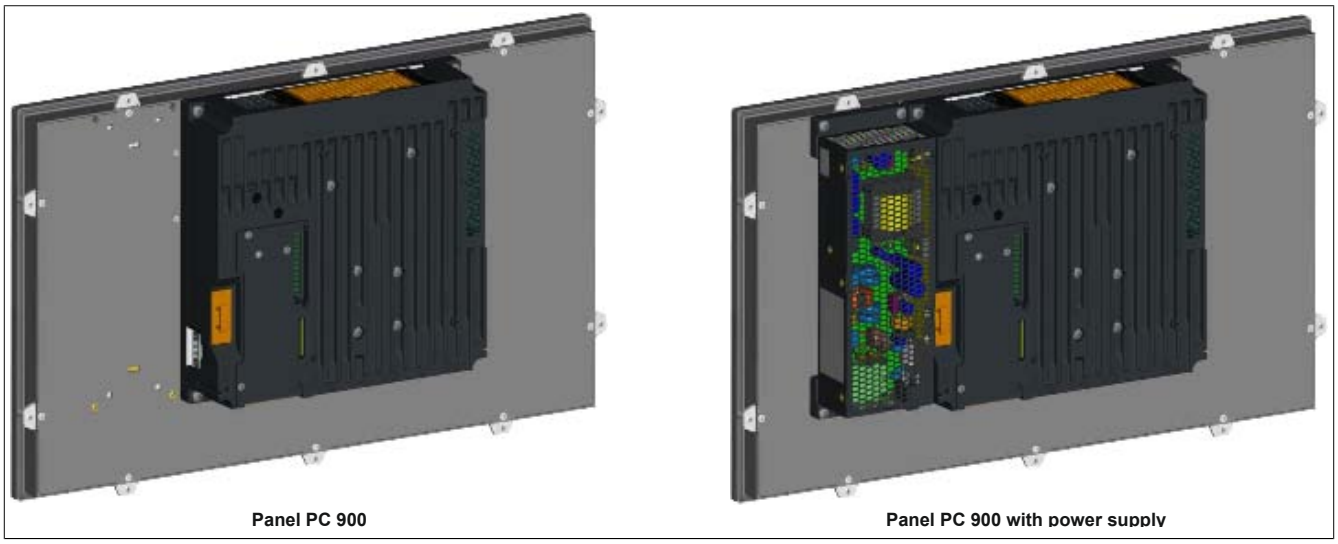

Figure 3: Panel PC 900 without bus unit

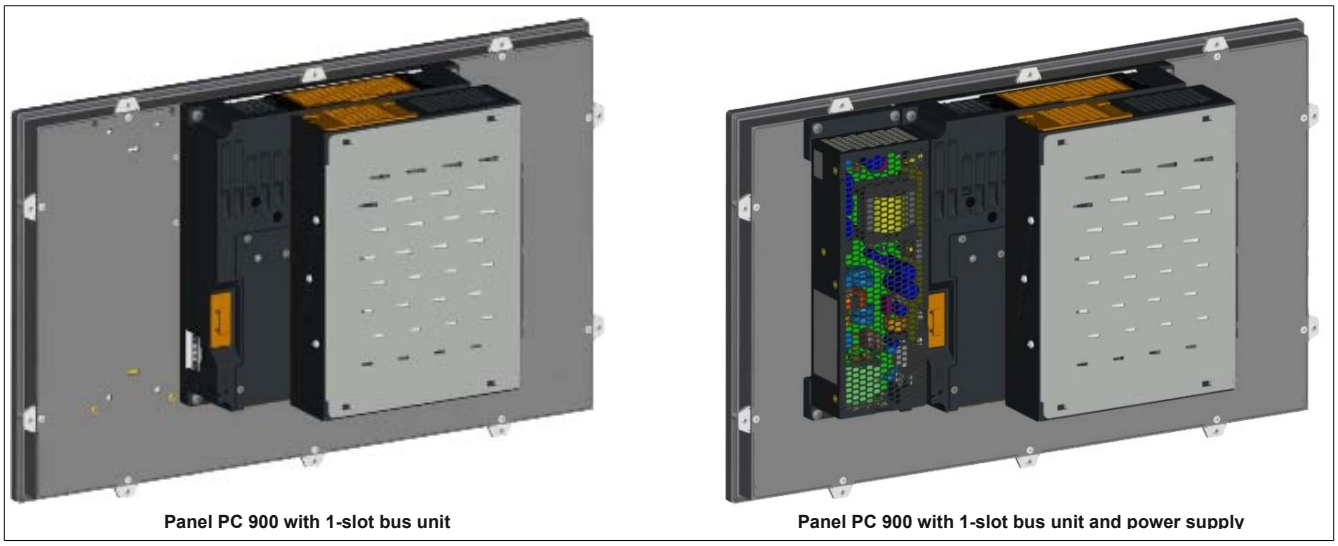

Figure 4: Panel PC 900 with 1-slot bus unit

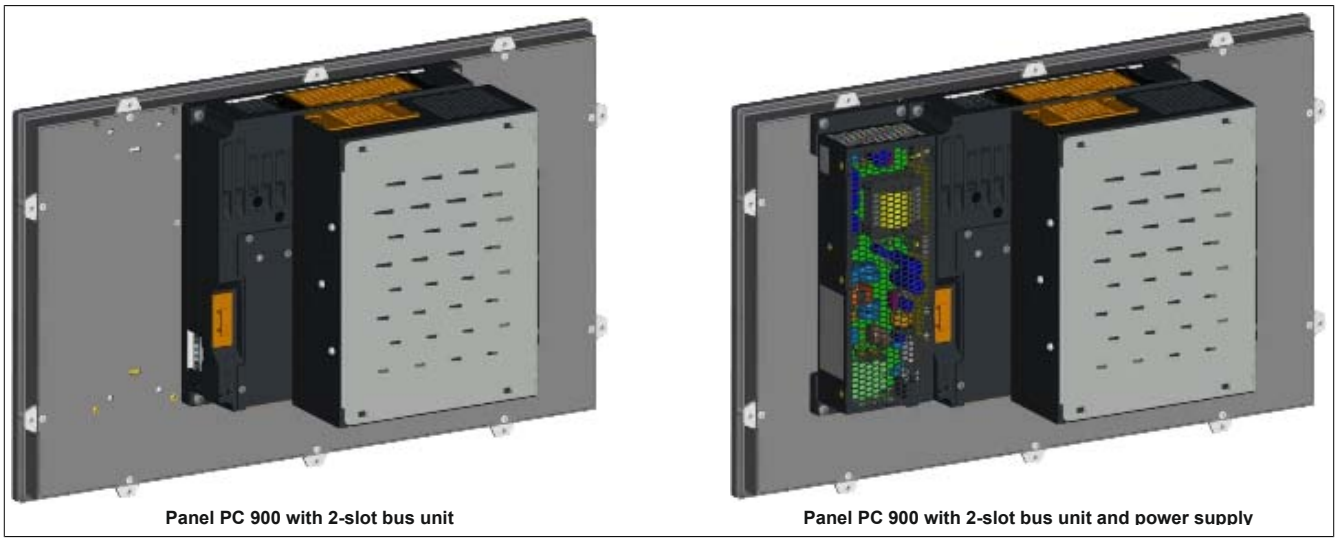

Figure 5: Panel PC 900 with 2-slot bus unit

2 Complete system

2.1 Mechanical characteristics

2.1.1 Dimensions

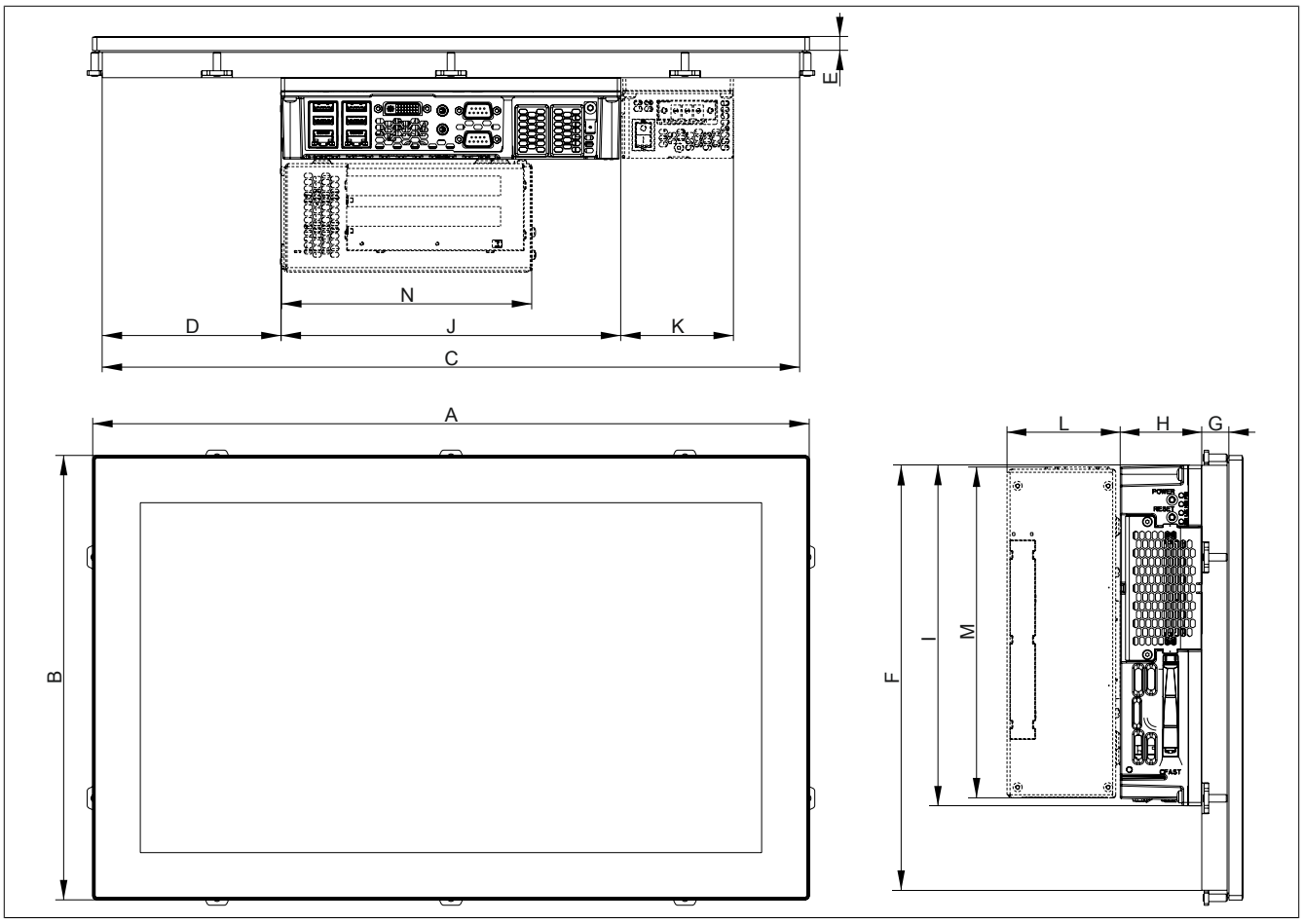

Figure 6: Panel PC 900 + power supply + bus units - Dimensions

All dimensions are specified in mm.

Display type	Model number	A	B	C	D	E	F	G	
12" single-touch	5AP923.1215-00	315	239	302	0	9	226	13.5	
15" single-touch	5AP923.1505-00	370	288	357	36.5	9	275	14.5	
19" single-touch	5AP923.1906-00	440	358	427	101	9	345	23	
15" widescreen multi-touch	5AP933.156B-00	414	258.5	401	57.5	9	245.5	20	
18" widescreen multi-touch	5AP933.185B-00	475	295	462	118.5	9	282	18	
21" widescreen multi-touch	5AP933.215C-00	541.5	333	528.5	151.75	9	320	18	
24" widescreen multi-touch	5AP933.240C-00	598.5	364	585.5	180.25	9	351	18	

Table 5: Display unit - Dimensions

Component	Model number	H	I	J	K	L	M	N	
CPU board and System unit	5PC901.TS77-xx & 5PC911.SX00-xx	54	226	225	-	-	-	-	
1-slot bus unit	5AC902.BX01-xx	-	-	-	-	54.7	218	164	
2-slot bus unit	5AC902.BX02-xx	-	-	-	-	75	218	164	
Power supply	5AC902.PS00-00	53.5	225.5	-	74.5	-	-	-	

Table 6: CPU boards, system units, bus units and power supply - Dimensions

Information:

3D diagrams are available upon request or can be downloaded from the B&R website www.br-automation.com.

2.1.2 Installation diagrams

Information:

When installing the Panel PC 900, spacing for air circulation as well as additional clearance for device operation and maintenance must be taken into consideration.

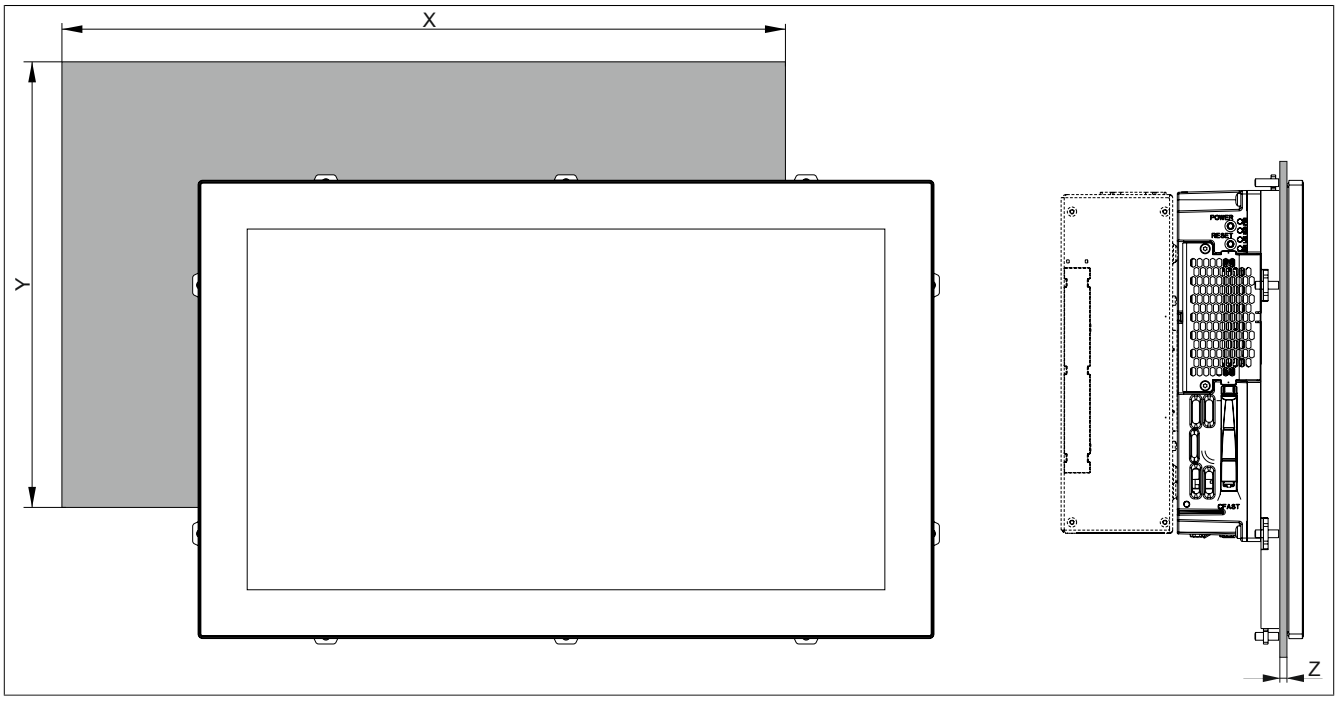

Figure 7: Panel PC 900 + power supply + bus units - Installation diagram

All dimensions are specified in mm.

Display type	Model number	X	Y	Z min	Z max	Number of retaining clips	
12.1" single-touch	5AP923.1215-00	304	228	1	6	10 pcs.	
15.0" single-touch	5AP923.1505-00	359	277	1	6	10 pcs.	
19.0" single-touch	5AP923.1906-00	429	347	1	6	12 pcs.	
15.6" multi-touch	5AP933.156B-00	403	247.5	1	6	10 pcs.	
18.5" multi-touch	5AP933.185B-00	464	284	1	6	10 pcs.	
21.5" multi-touch	5AP933.215C-00	530.5	322	1	6	14 pcs.	
24.0" multi-touch	5AP933.240C-00	587.5	353	1	6	14 pcs.	

Table 7: Display units - Installation diagrams

The "Z" dimension indicates the thickness of the wall or control cabinet panel.

A hex-head screwdriver is needed to tighten and loosen the screws on the retaining clips. The maximum torque for the retaining clips is 1 Nm.

2.1.3 Spacing for air circulation

In order to guarantee sufficient air circulation, the specified amount of space above, below, to the side and behind the device must be provided. The minimum specified spacing is indicated in the following diagram. This applies to all variants.

Information:

The following image and table provides a thermal examination of the complete system. If additional space is needed to operate or maintain the device, this must be taken into consideration during installation.

Air intake and exhaust is indicated in the following image for active Panel PCs (with fan kit). The air intake on passive Panel PCs (without fan kit) is located on the bottom to accommodate the rising warm air.

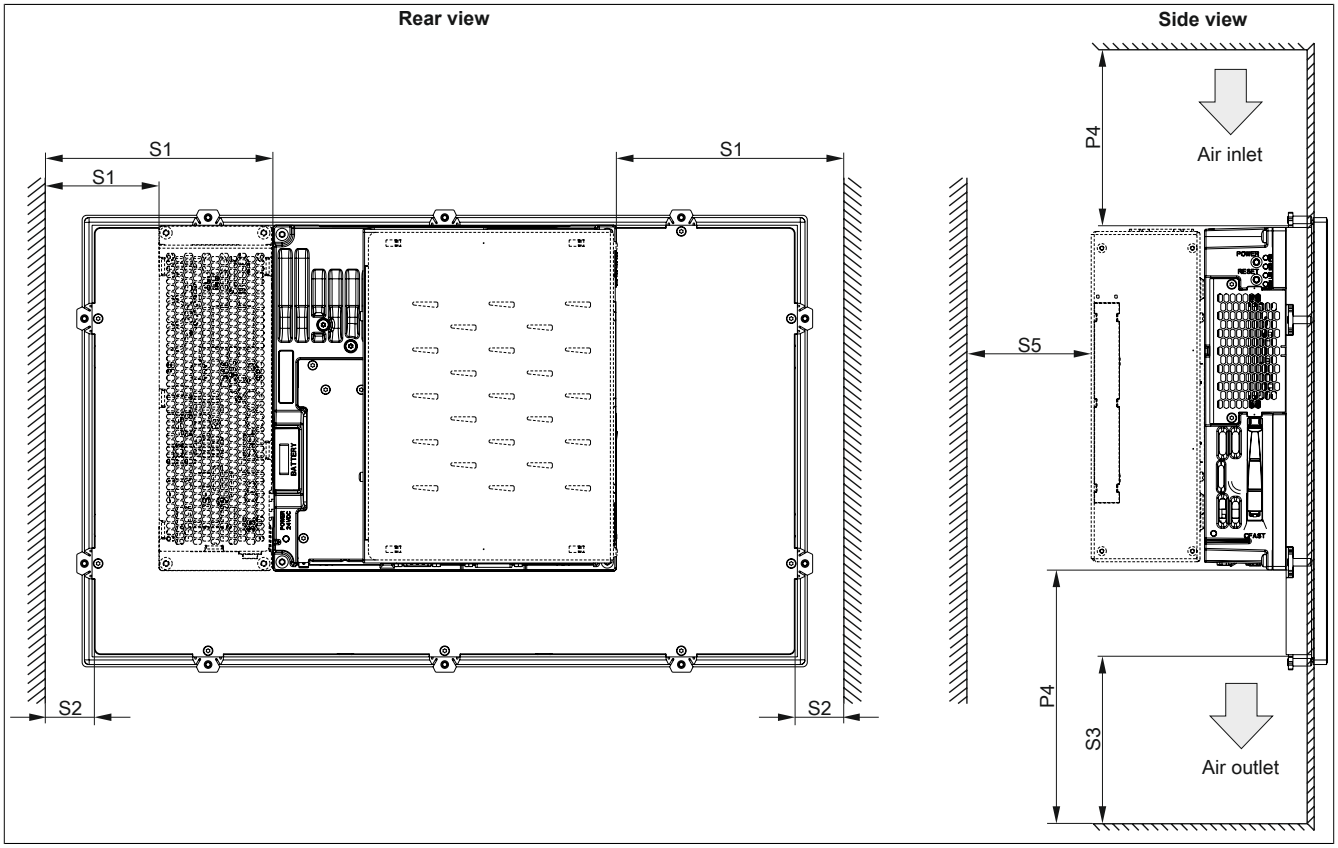

Figure 8: Panel PC 900 - Spacing for air circulation

S1: ≥20 mm

S2: ≥20 mm

S3: ≥50 mm

S4: ≥100 mm

S5: ≥50 mm

Caution!

The spacing specifications for air circulation are based on the worst-case scenario for operation at the maximum specified ambient temperature. The maximum specified ambient temperature must not be exceeded!

If the spacing specifications for air circulation cannot be adhered to, then the maximum specified temperatures for the temperature sensors (see "Temperature sensor positions" on page 30) must be monitored by the user and appropriate measures taken if they are exceeded.

2.1.4 Mounting orientations

The following diagrams show the approved mounting orientations for the Panel PC 900. The PPC900 must be mounted as described in the following sections.

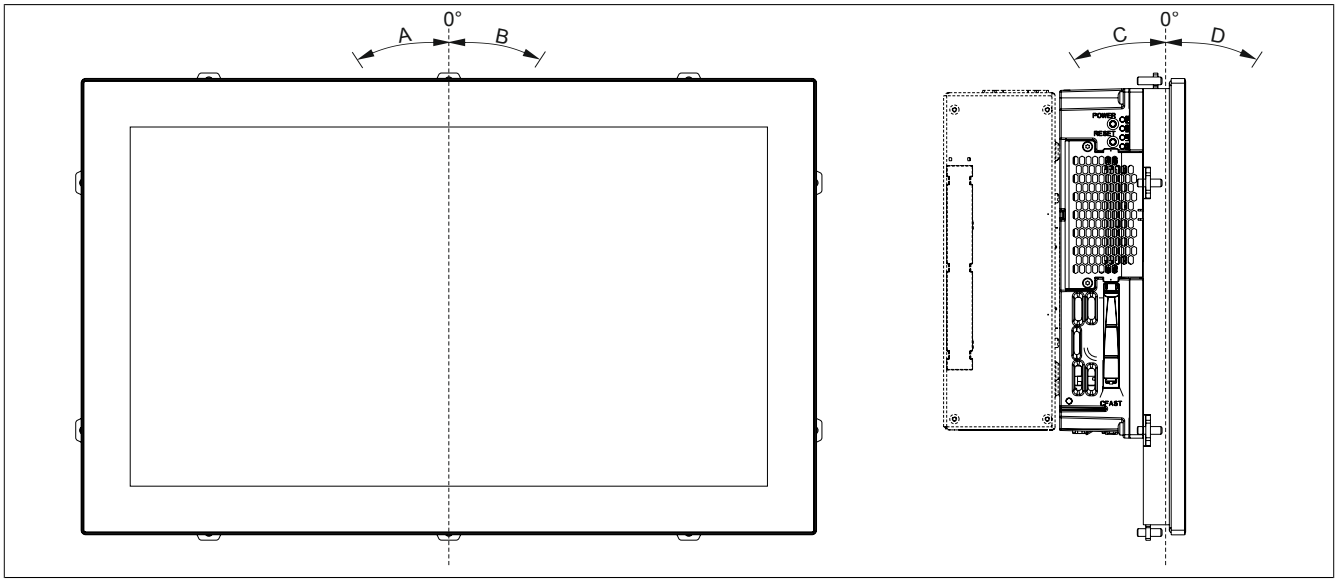

Figure 9: Panel PC 900 - Mounting orientation

Mounting orientation		Ambient temperature limitation[1)]	
0°	0°	-	
A	-90° (counterclockwise)	-	
B	+90° (clockwise)	5°C	
C, D	±180° (interfaces on top)	-	
C	-45°	-	
D	+90° (display downwards)	5°C	

Table 8: Mounting orientations with and without a fan kit

1) The maximum ambient temperature must be reduced by ....

Mounting orientation	Mounting orientation limitation with individual components[1)]	
	5AC901.SDVW-00	
0°	0°	
A	-30°	
B	+30°	
C	-5°	
D	+30°	

Table 9: Mounting orientation when operated with individual components with limitations

1) The mounting orientation may only be max. ....

In order to facilitate natural air circulation, devices must be mounted according to the spacing indicated in the section "Spacing for air circulation" on page 23.

2.1.5 Weight specifications

All weights are specified in g (grams).

Display type	Model number	Weight	
12.1" single-touch	5AP923.1215-00	2200	
15.0" single-touch	5AP923.1505-00	3700	
19.0" single-touch	5AP923.1906-00	5800	
15.6" multi-touch	5AP933.156B-00	3850	
18.5" multi-touch	5AP933.185B-00	4850	
21.5" multi-touch	5AP933.215C-00	5400	
24.0" multi-touch	5AP933.240C-00	7800	

Table 10: Display units - Weight

Component	Model number	Weight	
CPU boards	5PC901.TS77-xx	450	
System units	5PC911.SX00-00	3020	
	5PC911.SX00-01	3020	
1-slot bus units	5AC902.BX01-00	1020	
	5AC902.BX01-01	1020	
2-slot bus units	5AC902.BX02-00	1220	
	5AC902.BX02-01	1220	
	5AC902.BX02-02	1220	
Power supply	5AC902.PS00-00	580	
Fan kit	5AC902.FA00-00	70	
	5AC902.FA0X-00	36	
Slide-in compact drives	5AC901.CHDD-01	134	
	5AC901.CSSD-03	118	
	5AC901.CSSD-04	118	
	5AC901.CSSD-05	118	
Slide-in drives	5AC901.SDVW-00	400	
Interface options	5AC901.I485-00	34	
	5AC901.ICAN-00	33	
	5AC901.ISRM-00	20	
	5AC901.IHDA-00	21	
	5AC901.IRDY-00	30	
Uninterruptible power supply	5AC901.IUPS-00	28	
	5AC901.IUPS-01	28	
	5AC901.BUPS-00	4600	
	5AC901.BUPS-01	2550	

Table 11: CPU boards, system units, bus units and power supply - Weight

2.2 Environmental characteristics

2.2.1 Temperature specifications

CPU boards can be combined with various other components such as drives, main memory, additional plug-in cards, etc. depending on the display unit and system unit. The many different configurations possible result in varying maximum ambient temperatures, which can be seen in the following tables in this section.

> **Information:**
>
> **The maximum specified ambient temperatures for operation with and without a fan kit have been determined under worst-case conditions. Experience has shown that higher ambient temperatures can be reached in typical applications, e.g. those in Microsoft Windows. Testing and evaluation must be performed on-site by the user (temperatures can be read in BIOS or with the B&R Control Center).**

Information regarding worst-case conditions

- Thermal Analysis Tool (TAT V7.1) from Intel for simulating a 100% processor load
- BurnInTest tool (BurnInTest V4.0 Pro from Passmark Software) for simulating a 100% load on the interface via loop back adapters (serial interfaces, slide-in drives, USB ports, audio outputs)
- Maximum system expansion and power consumption

2.2.1.1 Maximum ambient temperature during operation

Operation with a fan kit

Information:

The 5PC911.SX00-00 system unit must be used when operating the Panel PC 900 with a fan kit.

		Operation with a fan kit and 5PC911.SX00-00 system unit												
	All temperature values in degrees Celsius (°C) at 500 m above sea level. The maximum ambient temperature is typically derated by 1°C per 1000 meters (starting at 500 meters above sea level).	i7 3615QE 5PC901.TS77-00	i7 3612QE 5PC901.TS77-01	i7 3555LE 5PC901.TS77-02	i7 3517UE 5PC901.TS77-03	i5 3610ME 5PC901.TS77-04	i3 3120ME 5PC901.TS77-05	i3 3217UE 5PC901.TS77-06	C 847E 5PC901.TS77-07	C 827E 5PC901.TS77-08	C 1020E 5PC901.TS77-09	C 1047UE 5PC901.TS77-10	Temperature limits	Location of sensor(s)
	Maximum ambient temperature	**50**	**55**	**55**	**55**	**55**	**55**	**55**	**55**	**55**	**55**	**55**		
	What else can also be operated at the max. ambient temperature, or are there any limits?													
Display units	5AP923.1215-00	✓	✓	✓	✓	✓	✓	✓	✓	✓	✓	✓	-	Display
	5AP923.1505-00	✓	✓	✓	✓	✓	✓	✓	✓	✓	✓	✓	-	
	5AP923.1906-00	45	45	45	45	45	45	45	45	45	45	45	-	
	5AP933.156B-00	✓	50	50	50	50	50	50	50	50	50	50	-	
	5AP933.185B-00	✓	50	50	50	50	50	50	50	50	50	50	-	
	5AP933.215C-00	45	45	45	45	45	45	45	45	45	45	45	-	
	5AP933.240C-00	45	45	45	45	45	45	45	45	45	45	45	-	
Main memory	1x 5MMDDR.xxxx-03 inserted[1)]	✓	✓	✓	✓	✓	✓	✓	✓	✓	✓	✓	-	-
	2x 5MMDDR.xxxx-03 inserted	✓	✓	✓	✓	✓	✓	✓	✓	✓	✓	✓	-	
Slide-in compact drives	5AC901.CHDD-01	✓	50	50	50	50	50	50	50	50	50	50	-	-
	5AC901.CSSD-03	✓	✓	✓	✓	✓	✓	✓	✓	✓	✓	✓	-	
	5AC901.CSSD-04	✓	✓	✓	✓	✓	✓	✓	✓	✓	✓	✓	-	
	5AC901.CSSD-05	✓	✓	✓	✓	✓	✓	✓	✓	✓	✓	✓	-	
	5AC901.CCFA-00	✓	✓	✓	✓	✓	✓	✓	✓	✓	✓	✓	-	
Slide-in drives	5AC901.SDVW-00	40	40	40	40	40	40	40	40	40	40	40	-	Slide-in drive
	5AC901.SSCA-00[2)]	✓	✓	✓	✓	✓	✓	✓	✓	✓	✓	✓	-	
Interface options	5AC901.I485-00	✓	✓	✓	✓	✓	✓	✓	✓	✓	✓	✓	-	-
	5AC901.ICAN-00	✓	✓	✓	✓	✓	✓	✓	✓	✓	✓	✓	-	
	5AC901.IHDA-00	✓	✓	✓	✓	✓	✓	✓	✓	✓	✓	✓	-	
	5AC901.ISRM-00	✓	✓	✓	✓	✓	✓	✓	✓	✓	✓	✓	-	
	5AC901.IRDY-00	✓	✓	✓	✓	✓	✓	✓	✓	✓	✓	✓	-	
	5AC901.IUPS-00	✓	✓	✓	✓	✓	✓	✓	✓	✓	✓	✓	-	
	5AC901.IUPS-01	✓	✓	✓	✓	✓	✓	✓	✓	✓	✓	✓	-	
Bus units	5AC902.BX01-00	✓	✓	✓	✓	✓	✓	✓	✓	✓	✓	✓	-	-
	5AC902.BX01-01	✓	✓	✓	✓	✓	✓	✓	✓	✓	✓	✓	-	
	5AC902.BX02-00	✓	✓	✓	✓	✓	✓	✓	✓	✓	✓	✓	-	
	5AC902.BX02-01	✓	✓	✓	✓	✓	✓	✓	✓	✓	✓	✓	-	
	5AC902.BX02-02	✓	✓	✓	✓	✓	✓	✓	✓	✓	✓	✓	-	
Power supply	5AC902.PS00-00	✓	✓	✓	✓	✓	✓	✓	✓	✓	✓	✓	-	-
CFast cards	5CFAST.2048-00	✓	✓	✓	✓	✓	✓	✓	✓	✓	✓	✓	-	CFast slot
	5CFAST.4096-00	✓	✓	✓	✓	✓	✓	✓	✓	✓	✓	✓	-	
	5CFAST.8192-00	✓	✓	✓	✓	✓	✓	✓	✓	✓	✓	✓	-	
	5CFAST.016G-00	✓	✓	✓	✓	✓	✓	✓	✓	✓	✓	✓	-	
	5CFAST.032G-00	✓	✓	✓	✓	✓	✓	✓	✓	✓	✓	✓	-	

1) Main memory must be inserted in RAM slot 2.
2) The max. ambient temperature depends on the slide-in compact drive being used.

Table 12: Ambient temperature with a fan kit

Operation without a fan kit

Information:

The 5PC901.TS77-00 CPU board cannot be operated without a fan kit.

The 5PC911.SX00-01 system unit must be used when operating the Panel PC 900 without a fan kit.

		Operation without a fan kit and 5PC911.SX00-01 system unit												
	All temperature values in degrees Celsius (°C) at 500 m above sea level. The maximum ambient temperature is typically derated by 1°C per 1000 meters (starting at 500 meters above sea level).	i7 3615QE 5PC901.TS77-00	i7 3612QE 5PC901.TS77-01	i7 3555LE 5PC901.TS77-02	i7 3517UE 5PC901.TS77-03	i5 3610ME 5PC901.TS77-04	i3 3120ME 5PC901.TS77-05	i3 3217UE 5PC901.TS77-06	C 847E 5PC901.TS77-07	C 827E 5PC901.TS77-08	C 1020E 5PC901.TS77-09	C 1047UE 5PC901.TS77-10	Temperature limits	Location of sensor(s)
	Maximum ambient temperature	**-**	**35**	**40**	**50**	**35**	**35**	**50**	**50**	**50**	**35**	**50**		
	What else can also be operated at the max. ambient temperature, or are there any limits?													
Display units	5AP923.1215-00	-	✓	✓	✓	✓	✓	✓	✓	✓	✓	✓	-	Display
	5AP923.1505-00	-	✓	✓	✓	✓	✓	✓	✓	✓	✓	✓	-	
	5AP923.1906-00	-	✓	✓	40	✓	✓	40	40	40	✓	40	-	
	5AP933.156B-00	-	✓	✓	45	✓	✓	45	45	45	✓	45	-	
	5AP933.185B-00	-	✓	✓	45	✓	✓	45	45	45	✓	45	-	
	5AP933.215C-00	-	✓	✓	40	✓	✓	40	40	40	✓	40	-	
	5AP933.240C-00	-	✓	✓	40	✓	✓	40	40	40	✓	40	-	
Main memory	1x 5MMDDR.xxxx-03 inserted[1]	-	✓	✓	✓	✓	✓	✓	✓	✓	✓	✓	-	-
	2x 5MMDDR.xxxx-03 inserted	-	30	35	45	30	30	45	45	45	30	45	-	
Slide-in compact drives	5AC901.CHDD-01	-	30[3]	30[3]	35[3]	30[3]	30[3]	35[3]	35[3]	35[3]	30[3]	35[3]	-	-
	5AC901.CSSD-03 ≥ Rev. D0	-	✓	✓	✓[3]	✓	✓	✓[3]	✓[3]	✓[3]	✓	✓[3]	-	
	5AC901.CSSD-03 ≤ Rev. C0	-	✓	✓	40[3]	✓	✓	40[3]	40[3]	40[3]	✓	40[3]	-	
	5AC901.CSSD-04 ≥ Rev. D0	-	✓	✓	✓[3]	✓	✓	✓[3]	✓[3]	✓[3]	✓	✓[3]	-	
	5AC901.CSSD-04 ≤ Rev. C0	-	✓	✓	40[3]	✓	✓	40[3]	40[3]	40[3]	✓	40[3]	-	
	5AC901.CSSD-05	-	✓	✓	✓[3]	✓	✓	✓[3]	✓[3]	✓[3]	✓	✓[3]	-	
	5AC901.CCFA-00	-	✓	✓	✓	✓	✓	✓	✓	✓	✓	✓	-	
Slide-in drives	5AC901.SDVW-00	-	✓	✓	40	✓	✓	40	40	40	✓	40	-	Slide-in drive
	5AC901.SSCA-00[2]	-	✓	✓	✓	✓	✓	✓	✓	✓	✓	✓	-	
Interface options	5AC901.I485-00	-	✓	✓	✓	✓	✓	✓	✓	✓	✓	✓	-	-
	5AC901.ICAN-00	-	✓	✓	✓	✓	✓	✓	✓	✓	✓	✓	-	
	5AC901.IHDA-00	-	✓	✓	40	✓	✓	40	40	40	✓	40	-	
	5AC901.ISRM-00	-	✓	✓	✓	✓	✓	✓	✓	✓	✓	✓	-	
	5AC901.IRDY-00	-	✓	✓	✓	✓	✓	✓	✓	✓	✓	✓	-	
	5AC901.IUPS-00	-	✓	✓	✓	✓	✓	✓	✓	✓	✓	✓	-	
	5AC901.IUPS-01	-	✓	✓	✓	✓	✓	✓	✓	✓	✓	✓	-	
Bus units	5AC902.BX01-00	-	✓	✓	✓	✓	✓	✓	✓	✓	✓	✓	-	-
	5AC902.BX01-01	-	✓	✓	✓	✓	✓	✓	✓	✓	✓	✓	-	
	5AC902.BX02-00	-	✓	✓	✓	✓	✓	✓	✓	✓	✓	✓	-	
	5AC902.BX02-01	-	✓	✓	✓	✓	✓	✓	✓	✓	✓	✓	-	
	5AC902.BX02-02	-	✓	✓	✓	✓	✓	✓	✓	✓	✓	✓	-	
Power supply	5AC902.PS00-00	-	✓	✓	✓	✓	✓	✓	✓	✓	✓	✓	-	-
CFast cards	5CFAST.2048-00	-	✓	✓	✓	✓	✓	✓	✓	✓	✓	✓	-	CFast slot
	5CFAST.4096-00	-	✓	✓	✓	✓	✓	✓	✓	✓	✓	✓	-	
	5CFAST.8192-00	-	✓	✓	✓	✓	✓	✓	✓	✓	✓	✓	-	
	5CFAST.016G-00	-	✓	✓	✓	✓	✓	✓	✓	✓	✓	✓	-	
	5CFAST.032G-00	-	✓	✓	✓	✓	✓	✓	✓	✓	✓	✓	-	

1) Main memory must be inserted in RAM slot 2.
2) The max. ambient temperature depends on the slide-in compact drive being used.
3) For systems with a total system load >90 W, the max. ambient temperature must be reduced by 5°C.

Table 13: Ambient temperature without a fan kit

2.2.1.1.1 How is the maximum ambient temperature for the Panel PC 900 determined?

1. System unit selection (with or without a fan kit)
2. CPU type selection
3. The "Maximum ambient temperature" row shows the maximum ambient temperature for the complete system, including the respective CPU board.

> **Information:**
>
> **Maximum temperature data is for operation at 500 meters. The maximum ambient temperature is typically derated by 1°C per 1000 meters (starting at 500 meters above sea level).**

4. Incorporating additional drives, interface options, etc. can change the temperature limits of a PPC900 system.
5. The mounting orientation of the Panel PC 900 may result in limitations. For more information, see "Mounting orientations" on page 24.

If there is a "✓" next to the component, it can be used at the maximum ambient temperature of the complete system without problems.

If there is a specific temperature, for example "45", next to the component, then the ambient temperature of the complete PPC900 system cannot exceed this temperature.

2.2.1.2 Minimum ambient temperature during operation

For systems containing the following components, the minimum ambient temperature during operation is +5°C: 5AC901.SDVW-00.

If none of these components are used, then the minimum ambient temperature during operation is 0°C.

2.2.1.3 Ambient temperature for storage and transport

The following table provides an overview of the minimum and maximum ambient temperature for storing and transporting the complete system. The use of individual components may result in limitations.

Storage	Transport	
-20 to 60°C With 5AC901.BUPS-01: -15 to 40°C	-20 to 60°C With 5AC901.BUPS-01: -15 to 40°C	

Table 14: Ambient temperature in storage / transport

2.2.1.4 Temperature monitoring

Sensors monitor temperature values at many different locations in the PPC900. The location of these temperature sensors is illustrated in Figure 10 "Panel PC 900 - Temperature sensor positions" on page 30. The values listed in Table 15 "Temperature sensor locations" on page 30 represent the defined maximum temperature for this measurement point. An alarm is not triggered if this temperature is exceeded. These temperatures can be read in BIOS or approved Microsoft Windows operating systems via the B&R Control Center.

In addition, the hard disks for PPC900 systems available from B&R are equipped with S.M.A.R.T, or Self-Monitoring, Analysis, and Reporting Technology. This makes it possible to read various parameters, e.g. temperature, using software (such as HDD Thermometer, a freeware program) on approved Microsoft operating systems.

2.2.1.5 Temperature sensor positions

Sensors indicate temperature values at many different locations in the PPC900. The temperatures[2)] can be read in BIOS (Advanced - OEM features - System board features / CPU board features - Temperature values) or in Microsoft Windows operating systems via the B&R Control Center[3)].

For applications that don't use Windows, the temperatures can be evaluated using the B&R implementation guide. In addition to the implementation guide, there are also programs available in MS-DOS.

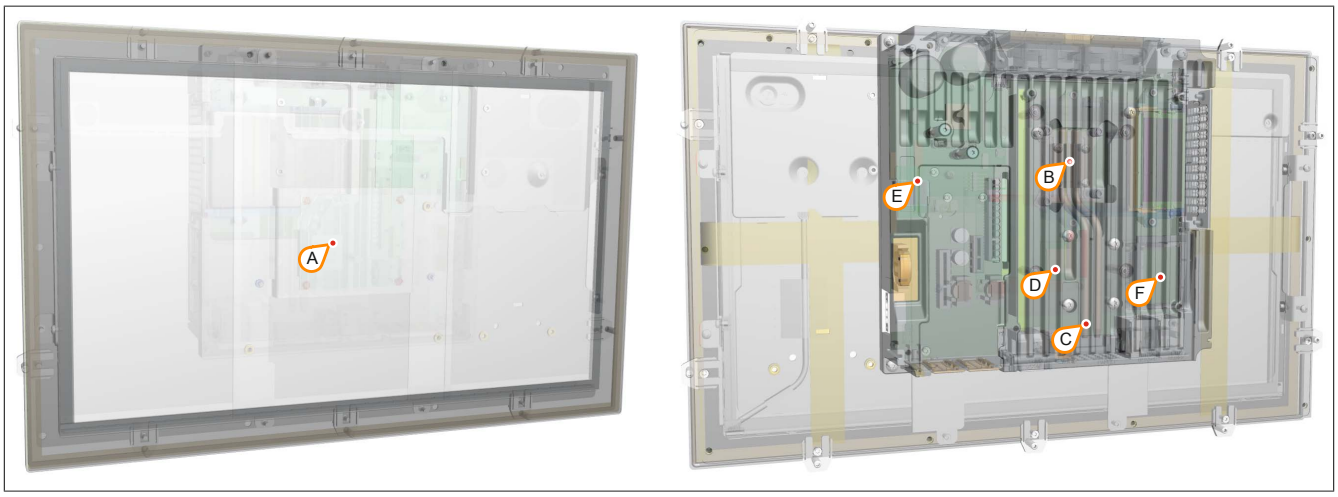

Figure 10: Panel PC 900 - Temperature sensor positions

ADI sensors	Position	Measurement point for	Measurement	Max. specified
Panel	A	Display	Temperature of the display (sensor integrated in display unit)	5AP923.1215-00: 80°C 5AP923.1505-00: 80°C 5AP923.1906-00: 75°C 5AP933.156B-00: 75°C 5AP933.185B-00: 75°C 5AP933.215C-00: 80°C 5AP933.240C-00: 75°C
CPU board	B	CPU	Ambient temperature of the processor (sensor integrated in the processor)	95°C
System unit 1	C	Board	Board temperature (sensor integrated on the CPU board)	95°C
System unit 2	D	Chipset	Chipset area temperature (sensor integrated on the CPU board)	85°C
System unit 3	E	Board power supply	Board power supply area temperature (sensor integrated on the CPU board)	95°C
System unit 4	F	CFast	CFast area temperature (sensor integrated on the CPU board)	85°C
Slide-in drive	G	Slide-in drive	Temperature of slide-in drive 1 (sensor integrated on the slide-in drive)	Depends on the drive
	H	Interface option[1)]	Interface option temperature (sensor integrated on the interface option)	Depends on the IF option

Table 15: Temperature sensor locations

1) A temperature sensor is currently not integrated in the interface options.

2) The temperature measured approximates the immediate ambient temperature but may also be influenced by neighboring components.
3) The ADI driver that includes the B&R Control Center is available in the Downloads section of the B&R website (www.br-automation.com).

2.2.1.6 Fan control

The MTCX constantly monitors the temperature using temperature sensors, which directly determines how the fans are controlled. The speed depends on the measured temperature. Limit values may depend on the MTCX firmware version being used.

Position	Measurement point for	Startup temperature	Max. fan speed at:
A	Display	5AP923.1215-00: 70°C, 5AP923.1505-00: 70°C, 5AP923.1906-00: 65°C, 5AP933.156B-00: 65°C, 5AP933.185B-00: 65°C, 5AP933.215C-00: 70°C, 5AP933.240C-00: 65°C	5AP923.1215-00: 86°C, 5AP923.1505-00: 86°C, 5AP923.1906-00: 81°C, 5AP933.156B-00: 81°C, 5AP933.185B-00: 81°C, 5AP933.215C-00: 86°C, 5AP933.240C-00: 81°C
B	CPU	65°C	81°C
C	Board controller	70°C	86°C
D	Chipset	70°C	86°C
E	Board power supply	70°C	86°C
F	CFast	60°C	76°C
G	Slide-in drive 1	5AC901.SDVW-00: 44°C, 5AC901.SSCA-00: 55°C	5AC901.SDVW-00: 60°C, 5AC901.SSCA-00: 71°C
H	Interface option[1)]	-	-

Table 16: Temperature sensor locations

1) A temperature sensor is currently not integrated in the interface options.

Once the startup temperature is reached, the device is started at the minimum fan speed. The maximum fan speed is reached at a startup temperature of 16°C. The fan speed in this area is controlled depending on the temperature.

Example with slide-in drive 5AC901.SDVW-00: 44°C + 16°C = 60°C --> maximum fan speed

The fans will only be shut off again if the evaluation temperature is more than 6°C below the switch-on temperature for a period of 4 hours (=overshoot time).

2.2.2 Humidity

The following table lists the minimum and maximum relative humidity values for the individual components that are relevant for the humidity limitations of a complete system. The lowest and highest common values are always used when establishing these limits.

Display type	Model number	Operation	Storage / Transport	
12.1" single-touch	5AP923.1215-00	5 to 90%	5 to 90%	
15.0" single-touch	5AP923.1505-00	8 to 90%	8 to 90%	
19.0" single-touch	5AP923.1906-00	5 to 90%	5 to 90%	
15.6" multi-touch	5AP933.156B-00	5 to 90%	5 to 90%	
18.5" multi-touch	5AP933.185B-00	5 to 90%	5 to 90%	
21.5" multi-touch	5AP933.215C-00	10 to 90%	10 to 90%	
24.0" multi-touch	5AP933.240C-00	5 to 90%	5 to 90%	

Table 17: Display units - Humidity

Component	Model number	Operation	Storage / Transport	
CPU board	5PC901.TS77-xx	10 to 90%	5 to 95%	
System unit	5PC911.SX00-xx	5 to 95%	5 to 95%	
1-slot bus unit	5AC902.BX01-xx	5 to 95%	5 to 95%	
2-slot bus unit	5AC902.BX02-xx	5 to 95%	5 to 95%	
Power supply	5AC902.PS00-00	7 to 90%	7 to 90%	
Slide-in compact drives	5AC901.CHDD-01	5 to 95%	5 to 95%	
	5AC901.CSSD-03 ≤ Rev. C0	8 to 90%	8 to 95%	
	5AC901.CSSD-03 ≥ Rev. D0	5 to 90%	5 to 95%	
	5AC901.CSSD-04 ≤ Rev. C0	8 to 90%	8 to 95%	
	5AC901.CSSD-04 ≥ Rev. D0	5 to 90%	5 to 95%	
	5AC901.CSSD-05	5 to 90%	5 to 95%	
	5AC901.CCFA-00	5 to 95%	5 to 95%	
Slide-in drives	5AC901.SDVW-00	8 to 80%	5 to 95%	
Interface options	5AC901.I485-00	5 to 90%	5 to 95%	
	5AC901.ICAN-00	5 to 90%	5 to 95%	
	5AC901.IHDA-00	5 to 90%	5 to 95%	
	5AC901.ISRM-00	5 to 90%	5 to 95%	
	5AC901.IRDY-00	5 to 90%	5 to 95%	
Uninterruptible power supply	5AC901.IUPS-00	5 to 90%	5 to 95%	
	5AC901.IUPS-01	5 to 90%	5 to 95%	
	5AC901.BUPS-00	5 to 95%	5 to 95%	
	5AC901.BUPS-01	25 to 85%	25 to 85%	

Table 18: CPU boards, system units, bus units and power supply - Humidity

The specifications listed correspond to the relative humidity at an ambient temperature of 30°C. More detailed information about specific temperature-dependent humidity values can be found in the technical data for the individual components.

2.2.3 Vibration

The following table provides an overview of the maximum vibration specifications of the complete system. The use of individual components may result in limitations.

Panel PC	Operation		Storage	Transport
	Continuous	Periodic		
With SSD drives and CFast cards	9 to 200 Hz: 1 g	9 to 200 Hz: 1 g	2 to 8 Hz: 7.5 mm amplitude 8 to 200 Hz: 2 g 200 to 500 Hz: 4 g	2 to 8 Hz: 7.5 mm amplitude 8 to 200 Hz: 2 g 200 to 500 Hz: 4 g
With hard disk drives	5 to 500 Hz: 0.25 g	5 to 500 Hz: 0.5 g	2 to 8 Hz: 7.5 mm amplitude 8 to 200 Hz: 2 g 200 to 500 Hz: 4 g	2 to 8 Hz: 7.5 mm amplitude 8 to 200 Hz: 2 g 200 to 500 Hz: 4 g
With DVD-R/RW drives	-	5 to 500 Hz: 0.2 g	2 to 8 Hz: 7.5 mm amplitude 8 to 200 Hz: 2 g 200 to 500 Hz: 4 g	2 to 8 Hz: 7.5 mm amplitude 8 to 200 Hz: 2 g 200 to 500 Hz: 4 g

Table 19: Vibration

2.2.4 Shock

The following table provides an overview of the maximum shock specifications of the complete system. The use of individual components may result in limitations.

Panel PC	Operation	Storage	Transport
With SSD drives and CFast cards	15 g, 11 ms	30 g, 6 ms	30 g, 6 ms
With hard disk drives	400 g, 2 ms	30 g, 6 ms	30 g, 6 ms
With DVD-R/RW drives	5 g, 11 ms	30 g, 6 ms	30 g, 6 ms

Table 20: Shock

2.2.5 Protection

The Panel PC 900 is rated IP65 on the front and IP20 on the back under the following conditions:

- Panel PC 900 correctly installed (see "Installation Panel PC" on page 130)
- All covers and components installed on the interfaces and slots
- All environmental conditions observed

2.3 Electrical characteristics

2.3.1 +24 VDC power supply

The 3-pin male connector required for the supply voltage connection is not included in delivery. It can be ordered from B&R using model number 0TB103.9 (screw clamp) or 0TB103.91 (cage clamp).

The pinout is listed in the following table. The supply voltage is protected internally by a soldered fuse (15 A, fast-acting) to prevent damage to the device in the event of an overload (fuse replacement necessary) or if the voltage supply is connected incorrectly (reverse polarity protection - fuse replacement not necessary). The device must be returned to B&R for repairs if the fuse is blown in the event of an error.

+24 VDC power supply		
Protected against reverse polarity		3-pin male connector
Pin	**Description**	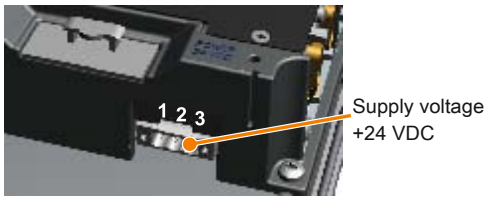
1	+	
2	Functional ground	
3	-	
Model number	**Short description**	
	Terminal blocks	
0TB103.9	Connector 24 V 5.08 3-pin screw clamp	
0TB103.91	Connector 24 V 5.08 3-pin cage clamp	

Table 21: +24 VDC supply voltage connection

Electrical characteristics		
Nominal voltage	24 VDC ±25%	
Nominal current	5.5 A	
Starting current	Max. 60 A for <300 µs	
Electrical isolation	Yes	
Uninterruptible power supply	Optional, with 5AC901.IUPS-00 or 5AC901.IUPS-01	

2.3.2 Optional Supply voltage VAC

In order to operate the Panel PC with AC power, the optional 5AC902.PS00-00 power supply must be installed on the Panel PC.

The 3-pin male connector required for the supply voltage connection is not included in delivery. This can be ordered from B&R using model number 0TB3103.8000.

The pinout is listed in the following table and printed on the housing. The supply voltage is protected internally by a soldered fuse to prevent damage to the device in the event of an overload (fuse replacement necessary) or if the voltage supply is connected incorrectly (reverse polarity protection - fuse replacement not necessary). The device must be returned to B&R for repairs if the fuse is blown in the event of an error.

VAC power supply		
Protected against reverse polarity		3-pin male connector
Pin	**Description**	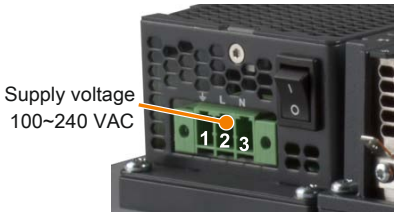
1	Protective ground	
2	L	
3	N	
Model number	**Short description**	
	Terminal blocks	
0TB3103.8000	Connector, 230 VAC, 3-pin female, 4 mm² screw clamp, protected against vibration by the screw flange	

Table 22: Supply voltage connection - VAC power supply

Electrical characteristics		
Nominal voltage	100 to 240 VAC	
Frequency	45 to 65 Hz	
Nominal current	1.25 to 2.5 A	
Starting current	< 20 A (cold restart, 100% load and 100 VAC)	
Internal fuse	Yes	
Uninterruptible power supply	Optional with external UPS	

2.3.3 Power calculation

In order to calculate the total power of the Panel PC, the power specifications of the display being used (see "Display units - Power calculation") must be entered in the "Display unit, permanent consumer" row of the "Leistungskalkulation" table.

Information:

The power supply's maximum total power of 130 watts must not be exceeded.

Information: All values in **watts** The values for the **suppliers** are maximum values. The values for the **consumers** are average maximum values, but not peak values.				**CPU board**										**Current system**
				i7 3615QE 45 W CPU 5PC901.TS77-00	i7 3612QE 35 W CPU 5PC901.TS77-01	i7 3555LE 25 W CPU 5PC901.TS77-02	i7 3517UE 17 W CPU 5PC901.TS77-03	i5 3610ME 35 W CPU 5PC901.TS77-04	i3 3120ME 35 W CPU 5PC901.TS77-05	i3 3217UE 17 W CPU 5PC901.TS77-06	C 847E 17 W CPU 5PC901.TS77-07	C 827E 17 W CPU 5PC901.TS77-08	C 1020E 35 W CPU 5PC901.TS77-09	C 1047UE 17 W CPU 5PC901.TS77-10	Enter values in this column
														Total power supply power (maximum)	**130**
														Maximum possible	**130**
Total power supply +12 V	+12 V		Display unit, permanent consumer[1]												
			CPU board, permanent consumer	50	40	30	22	40	40	22	22	22	40	22	
			1024 MB RAM, each 2 W, max. 2 pcs.												
			2048 MB RAM, each 2.5 W, max. 2 pcs.												
			4096 MB RAM, each 3 W, max. 2 pcs.												
			8192 MB RAM, each 3.5 W, max. 2 pcs.												
			Fan kit, optional	3	3	3	3	3	3	3	3	3	3	3	
			UPS IF option 5AC901.IUPS-00 during operation, optional	30	30	30	30	30	30	30	30	30	30	30	
			UPS IF option 5AC901.IUPS-01 during operation, optional	25	25	25	25	25	25	25	25	25	25	25	
			PCI card limit, optional (max. 3 W without fan kit, max. 6 W with fan kit)[2]												
			PCIe x8 card limit, optional (max. 3 W without fan kit, max. 20 W with fan kit)[2]												
														Maximum possible at -12V	**1.2**
		-12 V	PCI card limit, optional (max. 1.2 W with or without fan kit)[2]												
														Consumers -12 V ∑	
														Consumers ∑	
														Maximum possible at +5V	**50**
	+5 V		Display unit, permanent consumer[1]												
			CPU board, permanent consumer	2	2	2	2	2	2	2	2	2	2	2	
			Slide-in compact drive (HDD / SSD)	4	4	4	4	4	4	4	4	4	4	4	
			Slide-in drive (DVD / ...)	4	4	4	4	4	4	4	4	4	4	4	
			4x USB peripherals, each max. 5 W												
			Interface option, optional[3], max. 2 connections												
			PCI card limit, optional (max. 3 W without fan kit, max. 20 W with fan kit)[2]												
														Consumers +5 V ∑	
														Maximum possible at 3V3	**33**
	3V3		Display unit, permanent consumer[1]												
			CPU board, permanent consumer	5	5	5	5	5	5	5	5	5	5	5	
			CFast card	1	1	1	1	1	1	1	1	1	1	1	
			Interface option, optional[3]												
			PCI card limit, optional (max. 3 W without fan kit, max. 15 W with fan kit)[2]												
			PCIe x8 card limit, optional (max. 3 W without fan kit, max. 10 W with fan kit)[2]												
														Consumers 3V3 ∑	
														Total power supply, consumers ∑	

1) Power ratings for the display units can be found in the table below.
2) The total performance of one PCI/PCIe card per PCI slot (= sum of the power consumption for each voltage range) may not exceed the limits stated for operation with or without a fan kit.
3) Power ratings for the interface options are listed in the table below.

Table 23: CPU board - Power calculation

In order to accurately determine the total power of the complete system, the values in this table must be entered in the power calculation table depending on the display unit being used.

Display type	Model number	+5 V	3V3	+12 V
12.1" single-touch	5AP923.1215-00	-	4.20 W	7.20 W
15.0" single-touch	5AP923.1505-00	-	3.55 W	6.00 W
19.0" single-touch	5AP923.1906-00	8.00 W	-	22.40 W
15.6" multi-touch	5AP933.156B-00	3.35 W	-	10.50 W
18.5" multi-touch	5AP933.185B-00	6.10 W	-	10.80 W
21.5" multi-touch	5AP933.215C-00	7.40 W	-	18.30 W
24.0" multi-touch	5AP933.240C-00	6.35 W	-	24.00 W

Table 24: Display units - Power calculation

In order to accurately determine the total power of the complete system, the values in this table must be entered in the power calculation table if one or more of these options are connected to the system unit.

Component	Model number	+5 V	3V3	+12 V
Interface option				
RS232/422/485 IF option	5AC901.I485-00	1 W	-	-
CAN IF option	5AC901.ICAN-00	1 W	-	-
Audio IF option	5AC901.IHDA-00	0.2 W	0.2 W	-
SRAM IF option	5AC901.ISRM-00	-	2 W	-
Ready relay IF option	5AC901.IRDY-00	0.2 W	-	-
UPS IF option	5AC901.IUPS-00 in standby	-	-	0.1 W
UPS IF option	5AC901.IUPS-01 in standby	-	-	0.1 W

Table 25: Interface options - Power calculation

2.3.4 Block diagram

The following block diagram shows the simplified structure of the Panel PC 900 complete system without a display unit.

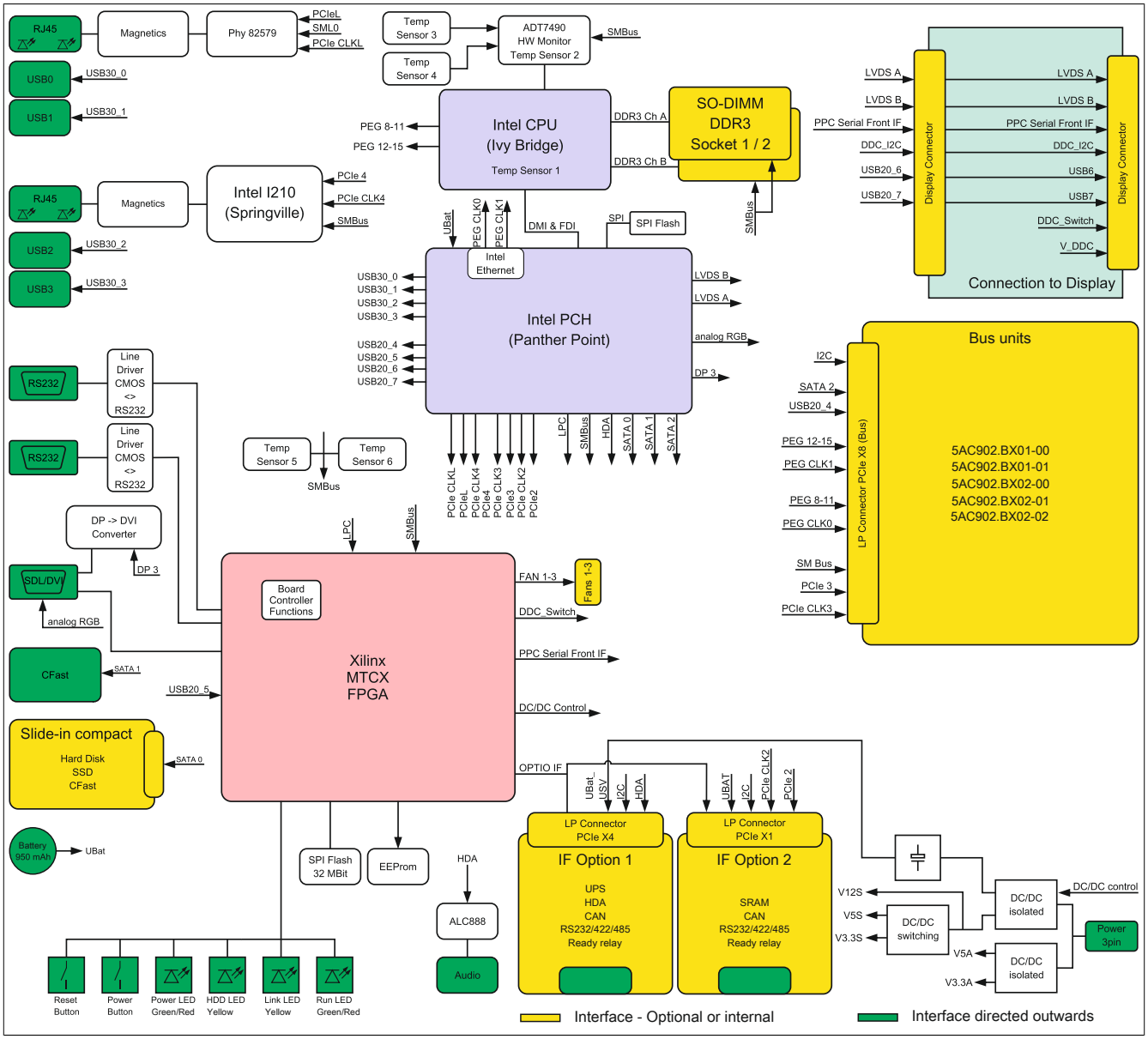

Figure 11: Block diagram - Panel PC 900

2.4 Device interfaces and slots

2.4.1 Overview of device interfaces

Interfaces are located on the bottom of the Panel PC 900.

The following indicates the position of interfaces on a Panel PC 900 with installed bus unit and AC power supply.

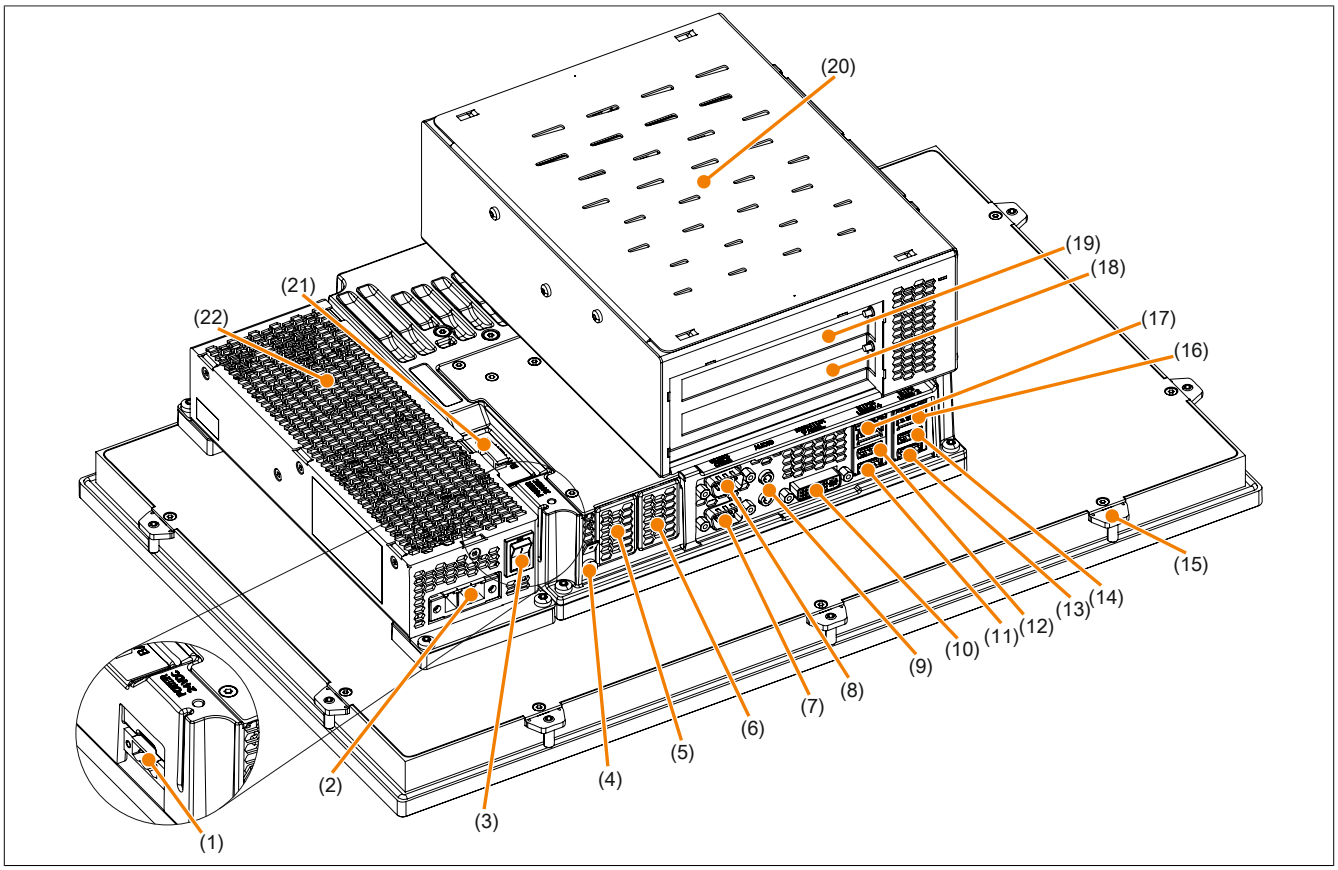

Figure 12: Device interfaces - Overview (bottom)

No.	Type of interface		No.	Type of interface	
1	24 VDC power	"+24 VDC power supply"	12	USB4	"USB interfaces"
2	230 VAC power	"Optional Supply voltage VAC "	13	USB1	"USB interfaces"
3	On/Off switch	"On/Off switch"	14	USB2	"USB interfaces"
4	Functional ground connection	"Grounding"	15	Retaining clips	
5	IF Option 1	"IF option 1 slot"	16	ETH1 (Ethernet1)	"Ethernet 1 (ETH1)"
6	IF Option 2	"IF option 2 slot"	17	ETH2 (Ethernet2)	"Ethernet 2 (ETH2)"
7	COM 1	"COM1 serial interface"	18	Card slot 1	"Card slot (PCI / PCIe)"
8	COM 2	"COM2 serial interface"	19	Card slot 2	"Card slot (PCI / PCIe)"
9	Audio	"Audio"	20	Optional bus unit	
10	Monitor/Panel	"Monitor/Panel interface"	21	Battery	"Battery"
11	USB3	"USB interfaces"	22	Optional AC power supply	

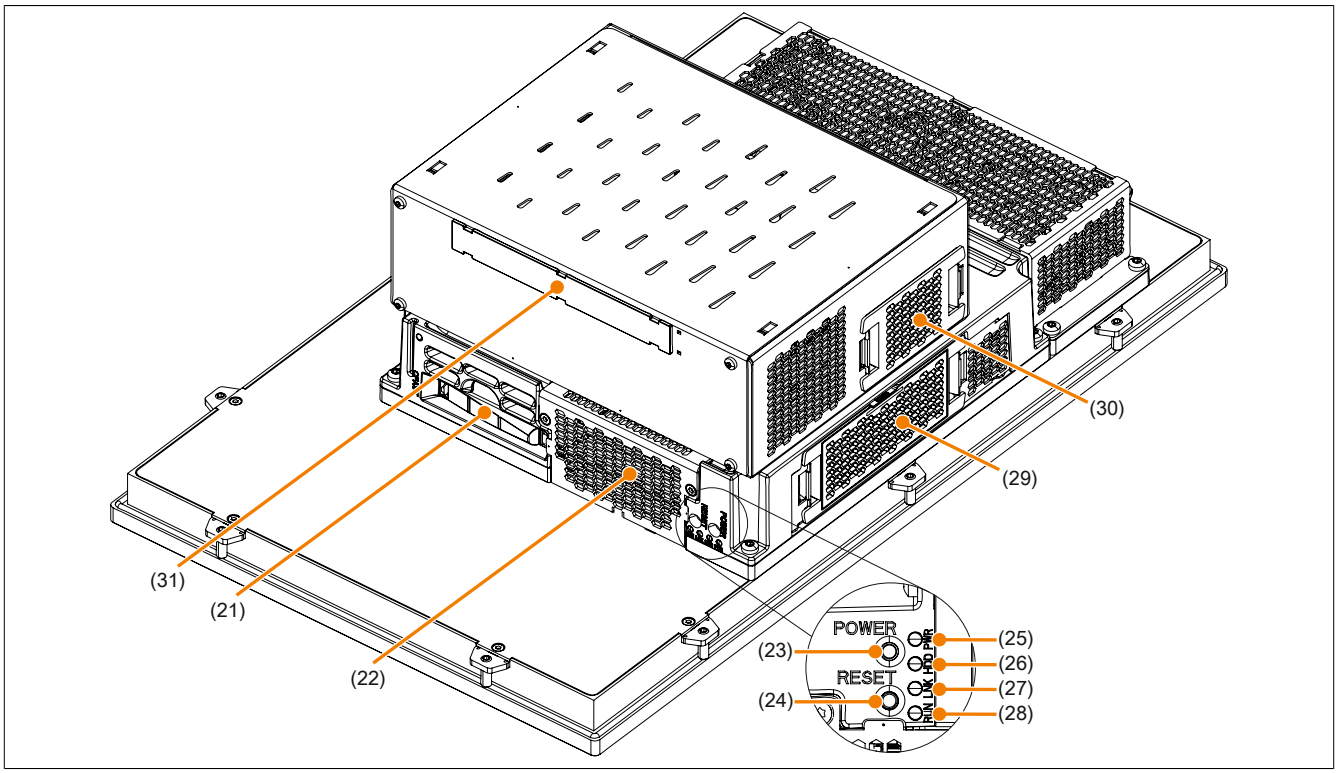

Figure 13: Device interfaces - Overview (side)

No.	Type of interface		No.	Type of interface	
21	CFast	"CFast slot"	27	LINK LED	"Status LEDs"
22	Main memory and Slide-in compact drive	"Main memory slots" Slide-in compact slot	28	RUN LED	"Status LEDs"
23	Power button	"Power button"	29	Fan kit for system unit	
24	Reset button	"Reset button"	30	Fan kit for bus unit	
25	Power LED	"Status LEDs"	31	Slide-in drive on bus unit	"Slide-in slot"
26	HDD LED	"Status LEDs"			

2.4.2 Supply voltage

The Panel PC can be operated with 24 VDC or optionally with 100~240 VAC. The 5AC902.PS00-00 power supply is needed for AC power.

Information on installing or exchanging the power supply can be found under "Installing or replacing the AC power supply" on page 135.

Danger!

- **All supply voltage must be disconnected before removing device covers or components or removing/installing accessories, hardware or cables.**
- **The power cable must be disconnected from the device and from the voltage supply.**
- **Before the device can be connected to the power supply and turned on, all covers, components, accessories, hardware and cables must be installed or attached.**

2.4.2.1 +24 VDC power supply

The 3-pin male connector required for the supply voltage connection is not included in delivery. It can be ordered from B&R using model number 0TB103.9 (screw clamp) or 0TB103.91 (cage clamp).

The pinout is listed in the following table. The supply voltage is protected internally by a soldered fuse (15 A, fast-acting) to prevent damage to the device in the event of an overload (fuse replacement necessary) or if the voltage supply is connected incorrectly (reverse polarity protection - fuse replacement not necessary). The device must be returned to B&R for repairs if the fuse is blown in the event of an error.

+24 VDC power supply		
Protected against reverse polarity		3-pin male connector
Pin	**Description**	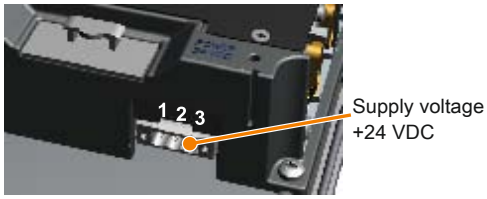
1	+	
2	Functional ground	
3	-	
Model number	**Short description**	
	Terminal blocks	
0TB103.9	Connector 24 V 5.08 3-pin screw clamp	
0TB103.91	Connector 24 V 5.08 3-pin cage clamp	

Table 26: +24 VDC supply voltage connection

Electrical characteristics		
Nominal voltage	24 VDC ±25%	
Nominal current	5.5 A	
Starting current	Max. 60 A for <300 µs	
Electrical isolation	Yes	
Uninterruptible power supply	Optional, with 5AC901.IUPS-00 or 5AC901.IUPS-01	

2.4.2.1.1 Grounding

Caution!

The functional ground (pin 2) must be connected to ground (e.g. control cabinet) using the shortest possible path. Using the largest possible conductor cross section on the supply connector is recommended.

The ground connection is located on the bottom of the Panel PC system.

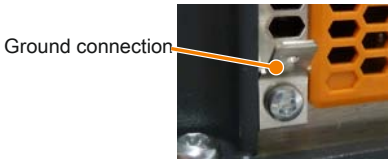

Figure 14: Ground connection

The ground connection can be used, for example, to fasten a copper strip to a central grounding point in the control cabinet or system where the device is installed. The largest possible conductor cross section should be used.

2.4.2.2 Optional Supply voltage VAC

In order to operate the Panel PC with AC power, the optional 5AC902.PS00-00 power supply must be installed on the Panel PC.

The 3-pin male connector required for the supply voltage connection is not included in delivery. This can be ordered from B&R using model number 0TB3103.8000.

The pinout is listed in the following table and printed on the housing. The supply voltage is protected internally by a soldered fuse to prevent damage to the device in the event of an overload (fuse replacement necessary) or if the voltage supply is connected incorrectly (reverse polarity protection - fuse replacement not necessary). The device must be returned to B&R for repairs if the fuse is blown in the event of an error.

VAC power supply		
Protected against reverse polarity		3-pin male connector
Pin	**Description**	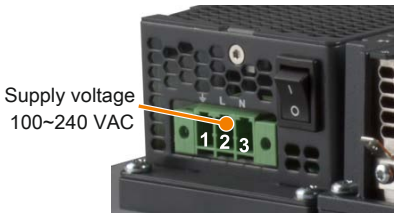
1	Protective ground	
2	L	
3	N	
Model number	**Short description**	
	Terminal blocks	
0TB3103.8000	Connector, 230 VAC, 3-pin female, 4 mm² screw clamp, protected against vibration by the screw flange	

Table 27: Supply voltage connection - VAC power supply

Electrical characteristics		
Nominal voltage	100 to 240 VAC	
Frequency	45 to 65 Hz	
Nominal current	1.25 to 2.5 A	
Starting current	< 20 A (cold restart, 100% load and 100 VAC)	
Internal fuse	Yes	
Uninterruptible power supply	Optional with external UPS	

2.4.2.2.1 On/Off switch

The On/Off switch can be used to turn the Panel PC on and off. It is found on the 100 ~ 240 VAC power supply.

On/Off switch		
		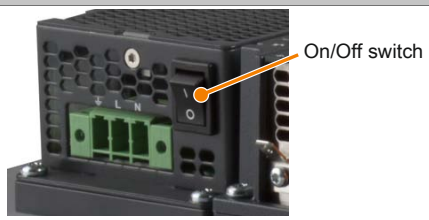
Switch position	**Description**	
o	The Panel PC is off.	
I	The Panel PC is on.	

Table 28: On/Off switch

2.4.3 COM1 serial interface

COM1 serial interface[1]		
	RS232	9-pin male DSUB connector 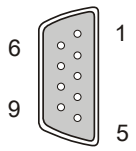
Type	RS232, modem-capable, not electrically isolated	
UART	16550-compatible, 16-byte FIFO	
Transfer rate	Max. 115 kbit/s	
Bus length	Max. 15 m	
Pin	**Assignment**	
1	DCD	
2	RXD	
3	TXD	
4	DTR	
5	GND	
6	DSR	
7	RTS	
8	CTS	
9	RI	

Table 29: COM1 - Pinout

1) The interfaces, etc. available on the device or module have been numbered as such for easy identification. This numbering may differ from that used by the particular operating system.

2.4.4 COM2 serial interface

COM2 serial interface[1]		
	RS232	9-pin male DSUB connector 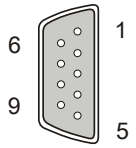
Type	RS232, modem-capable, not electrically isolated	
UART	16550-compatible, 16-byte FIFO	
Transfer rate	Max. 115 kbit/s	
Bus length	Max. 15 m	
Pin	**Assignment**	
1	DCD	
2	RXD	
3	TXD	
4	DTR	
5	GND	
6	DSR	
7	RTS	
8	CTS	
9	RI	

Table 30: COM2 - Pinout

1) The interfaces, etc. available on the device or module have been numbered as such for easy identification. This numbering may differ from that used by the particular operating system.

2.4.5 Monitor/Panel interface

Monitor/Panel interface - RGB / SDL (Smart Display Link) / DVI	
The following is an overview of the video signals available on the monitor/panel output. For details, see the technical data for the CPU board being used.	
CPU board	**Video signals for all system unit variants**
5PC901.TS77-00	RGB, DVI, SDL
5PC901.TS77-01	RGB, DVI, SDL
5PC901.TS77-02	RGB, DVI, SDL
5PC901.TS77-03	RGB, DVI, SDL
5PC901.TS77-04	RGB, DVI, SDL
5PC901.TS77-05	RGB, DVI, SDL
5PC901.TS77-06	RGB, DVI, SDL
5PC901.TS77-07	RGB, DVI, SDL
5PC901.TS77-08	RGB, DVI, SDL
5PC901.TS77-09	RGB, DVI, SDL
5PC901.TS77-10	RGB, DVI, SDL

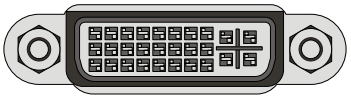

Table 31: Monitor/Panel interface - RGB, DVI, SDL

Information:

The hardware and graphics drivers of approved operating systems support the hot-plugging of display devices to the monitor/panel interface for service purposes. The male monitor/panel connector is specified for 100 connection cycles.

Information:

If a display device with a touch screen is connected to the monitor/panel interface and then disconnected again during operation (hot-plugging), it may be necessary to recalibrate the touch screen.

Information:

The RGB interface uses an analog signal; the line length depends on the resolution and prevailing environmental conditions. This interface is therefore only recommended for service purposes.

2.4.5.1 USB transfer rates in SDL and DVI modes

Information:

In SDL mode, the USB transfer rate is limited to USB 1.1.

In DVI mode, the maximum USB transfer rate is determined by the USB interface and USB hub on the display device.

2.4.5.2 Pinout

Pin	Assignment	Description	Pin	Assignment	Description
1	TMDS data 2-	DVI lane 2 (negative)	16	HPD	Hot plug detect
2	TMDS data 2+	DVI lane 2 (positive)	17	TMDS data 0-	DVI lane 0 (negative)
3	TMDS data 2/4 SHIELD	Shield for data pair 2 and 4	18	TMDS data 0+	DVI lane 0 (positive)
4	SDL-	SDL lane (negative)	19	TMDS Data 0/ XUSB1 SHIELD	Shield for data pair 0 and USB1
5	SDL+	SDL lane (positive)	20	XUSB1-	USB lane 1 (negative)
6	DDC clock	DDC-based control signal (clock)	21	XUSB1+	USB lane 1 (positive)
7	DDC data	DDC-based control signal (data)	22	TMDS clock shield	Shield for clock pair
8	N.C.	Not connected	23	TMDS clock+	DVI clock (positive)
9	TMDS data 1-	DVI lane 1 (negative)	24	TMDS clock -	DVI clock (negative)
10	TMDS DATA 1+	DVI lane 1 (negative) HDMI clock (positive)	C1	ANALOG RED	Analog red
11	TMDS DATA 1/ XUSB0 SHIELD	Shield for data pair 1 and USB0	C2	ANALOG GREEN	Analog green
12	XUSB0-	USB lane 0 (negative)	C3	ANALOG BLUE	Analog blue
13	XUSB0+	USB lane 0 (positive)	C4	ANALOG HORZ SYNC	Analog horizontal synchronization

24-pin female DVI connector

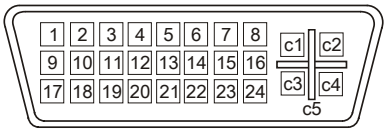

Table 32: DVI interface - Pinout

Pin	Assignment	Description	Pin	Assignment	Description	
14	+5 V power[1)]	+5 V power supply	C5	ANALOG GND	Analog ground (return for R, G and B signals)	
15	Ground (return for +5 V, HSync and VSync)	Ground				

Table 32: DVI interface - Pinout

1) Protected internally by a multifuse.

2.4.5.3 Cable lengths and resolutions for SDL transmission

The following table lists the relationship between segment lengths and maximum resolution depending on the SDL cable being used:

SDL cables	Resolution						
Segment length [m]	VGA 640 x 480	SVGA 800 x 600	XGA 1024 x 768	HD 1366 x 768	SXGA 1280 x 1024	UXGA 1600 x 1200	FHD 1920 x 1080
1.8	5CASDL.0018-00 5CASDL.0018-01 5CASDL.0018-03	5CASDL.0018-00 5CASDL.0018-01 5CASDL.0018-03	5CASDL.0018-00 5CASDL.0018-01 5CASDL.0018-03	5CASDL.0018-00 5CASDL.0018-01 5CASDL.0018-03	5CASDL.0018-00 5CASDL.0018-01 5CASDL.0018-03	5CASDL.0018-00 5CASDL.0018-01 5CASDL.0018-03	5CASDL.0018-00 5CASDL.0018-01 5CASDL.0018-03
5	5CASDL.0050-00 5CASDL.0050-01 5CASDL.0050-03	5CASDL.0050-00 5CASDL.0050-01 5CASDL.0050-03	5CASDL.0050-00 5CASDL.0050-01 5CASDL.0050-03	5CASDL.0050-00 5CASDL.0050-01 5CASDL.0050-03	5CASDL.0050-00 5CASDL.0050-01 5CASDL.0050-03	5CASDL.0050-00 5CASDL.0050-01 5CASDL.0050-03	5CASDL.0050-00 5CASDL.0050-01 5CASDL.0050-03
10	5CASDL.0100-00 5CASDL.0100-01 5CASDL.0100-03	5CASDL.0100-00 5CASDL.0100-01 5CASDL.0100-03	5CASDL.0100-00 5CASDL.0100-01 5CASDL.0100-03	5CASDL.0100-00 5CASDL.0100-01 5CASDL.0100-03	5CASDL.0100-00 5CASDL.0100-01 5CASDL.0100-03	5CASDL.0100-00 5CASDL.0100-01 5CASDL.0100-03	5CASDL.0100-00 5CASDL.0100-01 5CASDL.0100-03
15	5CASDL.0150-00 5CASDL.0150-01 5CASDL.0150-03	5CASDL.0150-00 5CASDL.0150-01 5CASDL.0150-03	5CASDL.0150-00 5CASDL.0150-01 5CASDL.0150-03	5CASDL.0150-00 5CASDL.0150-01 5CASDL.0150-03	5CASDL.0150-00 5CASDL.0150-01 5CASDL.0150-03	- - -	- - 5CASDL.0150-03
20	5CASDL.0200-00 5CASDL.0200-03	5CASDL.0200-00 5CASDL.0200-03	5CASDL.0200-00 5CASDL.0200-03	5CASDL.0200-00 5CASDL.0200-03	5CASDL.0200-00 5CASDL.0200-03	- -	- 5CASDL.0200-03
25	5CASDL.0250-00 5CASDL.0250-03	5CASDL.0250-00 5CASDL.0250-03	5CASDL.0250-00 5CASDL.0250-03	5CASDL.0250-00 5CASDL.0250-03	- -	- -	- -
30	5CASDL.0300-00 5CASDL.0300-03	5CASDL.0300-00 5CASDL.0300-03	- 5CASDL.0300-13	- 5CASDL.0300-13	- 5CASDL.0300-13	- -	- 5CASDL.0300-13
40	5CASDL.0400-13	5CASDL.0400-13	5CASDL.0400-13	5CASDL.0400-13	5CASDL.0400-13	-	5CASDL.0400-13

Table 33: Cable lengths and resolutions for SDL transmission

2.4.5.4 Cable lengths and resolutions for DVI transmission

The following table lists the relationship between segment lengths and maximum resolution depending on the SDL cable being used:

DVI cables	Resolution						
Segment length [m]	VGA 640 x 480	SVGA 800 x 600	XGA 1024 x 768	HD 1366 x 768	SXGA 1280 x 1024	UXGA 1600 x 1200	FHD 1920 x 1080
1.8	5CADVI.0018-00	5CADVI.0018-00	5CADVI.0018-00	5CADVI.0018-00	5CADVI.0018-00	5CADVI.0018-00	5CADVI.0018-00
5	5CADVI.0050-00	5CADVI.0050-00	5CADVI.0050-00	5CADVI.0050-00	5CADVI.0050-00	5CADVI.0050-00	5CADVI.0050-00

Table 34: Cable lengths and resolutions for DVI transmission

The maximum cable length for DVI transfer is limited to 5 m due to the USB specification.

2.4.6 Ethernet 1 (ETH1)

This Ethernet controller is integrated in the CPU board and connected to external devices via the system unit.

Ethernet 1 interface (ETH1[1])			
Controller	Intel® 82579V		Female RJ45 connector
Cabling	S/STP (Cat 5e)		
Transfer rate	10/100/1000 Mbit/s[2]		
Cable length	Max. 100 m (min. Cat 5e)		
Speed LED	**On**	**Off**	
Green	100 Mbit/s	10 Mbit/s[3]	
Orange	1000 Mbit/s	-	
Link LED	**On**	**Off**	
Green	Link (Ethernet network connection available)	Activity (blinking - data transfer in progress)	

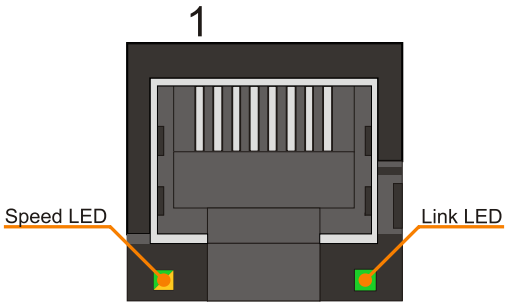

Table 35: Ethernet interface (ETH1)

1) The interfaces, etc. available on the device or module have been numbered as such for easy identification. This numbering may differ from that used by the particular operating system.
2) Switching takes place automatically.
3) The 10 Mbit/s transfer speed / connection only exists if the Link LED is also lit at the same time.

Driver support

A special driver is required in order to operate the Ethernet controller. Drivers for approved operating systems are available in the Downloads section of the B&R website (www.br-automation.com).

> **Information:**
>
> **Required drivers can only be downloaded from the B&R website, not from manufacturer websites.**

2.4.7 Ethernet 2 (ETH2)

This Ethernet controller is integrated in the CPU board and connected to external devices via the system unit.

Ethernet 2 interface (ETH2[1])			
Controller	Intel® I210		Female RJ45 connector
Cabling	S/STP (Cat 5e)		
Transfer rate	10/100/1000 Mbit/s[2]		
Cable length	Max. 100 m (min. Cat 5e)		
Speed LED	**On**	**Off**	
Green	100 Mbit/s	10 Mbit/s[3]	
Orange	1000 Mbit/s	-	
Link LED	**On**	**Off**	
Green	Link (Ethernet network connection available)	Activity (blinking - data transfer in progress)	

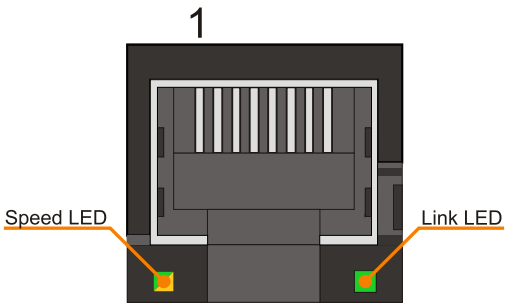

Table 36: Ethernet interface (ETH2)

1) The interfaces, etc. available on the device or module have been numbered as such for easy identification. This numbering may differ from that used by the particular operating system.
2) Switching takes place automatically.
3) The 10 Mbit/s transfer speed / connection only exists if the Link LED is also lit at the same time.

Driver support

A special driver is required in order to operate the Ethernet controller. Drivers for approved operating systems are available in the Downloads section of the B&R website (www.br-automation.com).

> **Information:**
>
> **Required drivers can only be downloaded from the B&R website, not from manufacturer websites.**

2.4.8 USB interfaces

The Panel PC features a USB 3.0 (Universal Serial Bus) host controller with multiple USB ports, 4 of which are accessible externally for the user.

Warning!

Peripheral USB devices can be connected to the USB interfaces on this device. Due to the vast number of USB devices available on the market, B&R cannot guarantee their performance. USB devices from B&R are guaranteed to function properly, however.

Caution!

Because this interface is designed according to general PC specifications, extreme care should be exercised with regard to EMC, cable routing, etc.

USB1, USB2, USB3, USB4

4 USB 3.0 ports are provided on the bottom of the Panel PC.

Universal Serial Bus (USB1, USB2, USB3, USB4)[1]		
Type	USB 3.0	4x USB type A, female 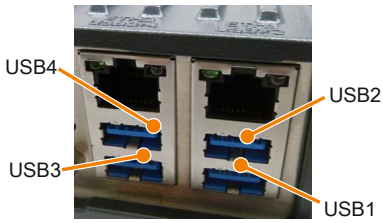
Design	Type A	
Transfer rate	Low speed (1.5 Mbit/s), full speed (12 Mbit/s), high speed (480 Mbit/s), super speed (5 Gbit/s)[2]	
Current load[3] USB1, USB2 USB3, USB4	 Max. 1 A Max. 1 A	
Cable length USB 2.0 USB 3.0	 Max. 5 m (without hub) Max. 3 m (without hub)	

Table 37: USB1, USB2, USB3 and USB4 interfaces

1) The interfaces, etc. available on the device or module have been numbered as such for easy identification. This numbering may differ from that used by the particular operating system.
2) Compatibility with Super Speed depends on the operating system used.
3) Each USB port is protected by a maintenance-free "USB current limiting circuit breaker" (max. 1 A).

2.4.9 CFast slot

The Panel PC offers an easy-to-reach CFast slot on the side, so that the CFast card can also be used as removable media for transferring data or performing upgrades.

This CFast slot is connected to the chipset internally via SATA 1 with SATA III design (SATA 6.0 Gbit/s).

CFast slot		
Connection	SATA 1	
Model number	**Short description**	
	CFast cards	
5CFAST.2048-00	CFast card, 2 GB	
5CFAST.4096-00	CFast card, 4 GB	
5CFAST.8192-00	CFast card, 8 GB	
5CFAST.016G-00	CFast card, 16 GB	
5CFAST.032G-00	CFast card, 32 GB	

Table 38: CFast slot

Warning!

Power must be turned off before inserting and removing the CFast card.

2.4.10 Audio

The MIC and Line IN ports share a connection. The Line OUT port has a separate connection. When a device is connected to an audio port, it is detected by the driver and the user can configure the connections.

MIC, Line IN, Line OUT		
Controller	Realtek RTL888	3.5 mm jack, female
MIC	Connection of a mono microphone with a 3.5 mm jack	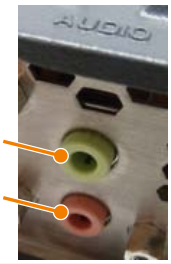
Line IN	Stereo Line IN signal supplied via a 3.5 mm jack	
Line OUT	Connection of a stereo playback device (e.g. amplifier) via a 3.5 mm jack	

Table 39: Audio

A special driver is required in order to operate the audio controller. Drivers for approved operating systems are available in the Downloads section of the B&R website (www.br-automation.com).

Information:

Required drivers can only be downloaded from the B&R website, not from manufacturer websites.

2.4.11 Status LEDs

The Status LEDs are located on the right side of the Panel PC when viewed from the front.

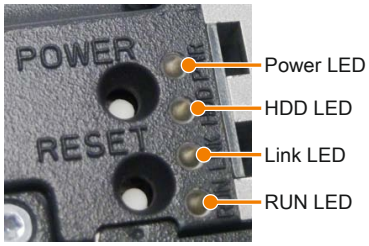

The following timing is used for the LED status indicators:
Block size: 250 ms
Repeat interval: 500 ms, 2 boxes thus represent one interval

LED	Color	Status	Description	LED status indicator
Power	Green	On	Supply voltage OK	
		Blinking	Device booted, battery status "BAD"	
			Information: **For more information, see "Battery" on page 50.**	
	Red	On	System in standby mode (S5: Soft-off mode or S4: Hibernation mode suspend-to-disk)	
		Blinking	MTCX running, battery status "BAD". System in standby mode (S5: Soft-off mode or S4: Hibernation mode suspend-to-disk).	
	Red / green	Blinking	Faulty or incomplete BIOS, MTCX or I/O FPGA update, battery status OK, supply voltage OK	
			Faulty or incomplete BIOS, MTCX or I/O FPGA update, battery status OK, standby mode (S5: Soft-off mode or S4: Hibernation mode suspend-to-disk)	
			Faulty or incomplete BIOS, MTCX or I/O FPGA update, battery status BAD, supply voltage OK	
			Faulty or incomplete BIOS, MTCX or I/O FPGA update, battery status BAD, standby mode (S5: Soft-off mode or S4: Hibernation mode suspend-to-disk)	
			Information: **An update must be performed again.**	
	Yellow	On	Supply voltage not OK, system operating from UPS	
HDD	Yellow	On	Indicates drive access (HDD, CFast)	
Link	Yellow	On	Indicates an active SDL connection on the male panel connector	
		Blinking	Indicates that an active SDL connection has been interrupted by a loss of power to the display unit	
			Information: **Check the supply voltage / power connector of the connected display unit.**	
Run	Green	Blinking	Automation Runtime booting Controlled by Automation Runtime (ARemb and ARwin)	
	Green	On	Application running Controlled by Automation Runtime (ARemb and ARwin)	
	Red	On	Application in service mode Controlled by Automation Runtime (ARemb and ARwin)	

Table 40: Data - LED status indicators

2.4.12 Power button

The power button provides a wide range of ATX power supply functions.

Power button	
The power button can be pressed with a pointed object (e.g. paper clip or tip of a pen). The power button acts like the on/off switch on a normal desktop PC with an ATX power supply: **Press and release** ... Switches on the Panel PC or shuts down the operating system and switches off the Panel PC. **Press and hold** ... Switches off the ATX power supply without shutting down the Panel PC (**data could be lost!**) Pressing the power button does not reset the MTCX processor.	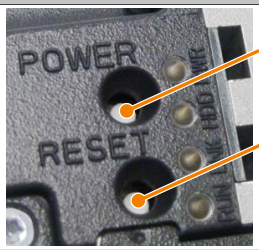

Table 41: Power button

2.4.13 Reset button

Reset button	
The reset button can be pressed with a pointed object (e.g. paper clip or tip of a pen). Pushing the reset button triggers a hardware and PCI reset. The Panel PC is restarted (cold restart). Pressing the reset button does not reset the MTCX processor.	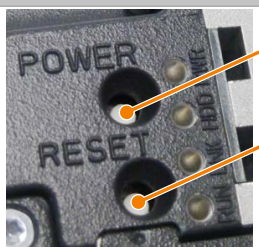

Table 42: Reset button

Warning!

A system reset can result in lost data!

2.4.14 Battery

The lithium battery (3 V, 950 mAh) buffers the internal real-time clock (RTC). It is located on the back of the Panel PC. The battery is installed in a battery holder, making it very easy to replace.

The battery's buffer lifespan is at least 4 years (at 50°C, 8.5 µA for the components being supplied and a self-discharge of 40%). If an SRAM interface option has been installed, this lifespan is reduced to 2½ years. The battery has a limited service life and should be replaced regularly (after the specified service life at the latest).

Battery		
Battery Type Removable Service life	 Renata 950 mAh Yes, accessible from the outside 4 years[1]	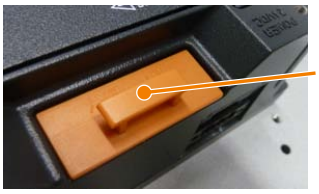
Model number	**Short description**	
	Batteries	
0AC201.91	Lithium batteries, 4 pcs., 3 V / 950 mAh, button cell	
4A0006.00-000	Lithium battery, 1 pc., 3 V / 950 mAh, button cell	

Table 43: Battery

1) At 50°C, 8.5 µA of the supplied components and a self-discharge of 40%.

The status of the battery is determined immediately after the device is started and subsequently checked by the system every 24 hours. During this measurement, the battery is subjected to a brief load (approximately 1 second) and then evaluated. Once determined, the battery status is displayed in BIOS (Advanced - OEM Features - System board features - Voltage values) and in the B&R Control Center (ADI driver); it can also be read in a customer application using the ADI library.

Battery status	Description
N/A	The hardware or firmware being used is too old and does not support reading the battery status.
GOOD	Data buffering is intact.
BAD	From the point when battery capacity is recognized as insufficient (BAD), data buffering is intact for approximately another 500 hours.

Table 44: Battery status

From the point when battery capacity is recognized as insufficient, data buffering is intact for approximately another 500 hours. When replacing the battery, data is buffered for approximately 10 minutes by a gold leaf capacitor.

2.4.15 Slide-in compact slot

The slide-in compact slot is connected to the chipset internally via SATA 0 with SATA III design (SATA 6.0 Gbit/s).

Slide-in compact slot		
Connection	SATA 0	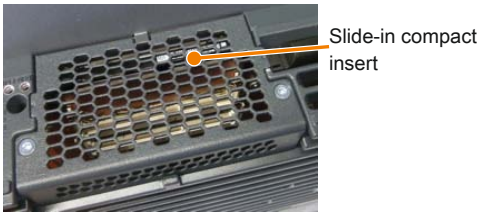
Model number	**Short description**	
	Drives	
5AC901.CHDD-01	500 GB SATA slide-in compact hard disk, 24/7 operation with extended temperature range, note: Please see the manual for information about using this hard disk.	
5AC901.CSSD-03	60 GB SATA SSD (MLC), slide-in compact	
5AC901.CSSD-04	128 GB SATA SSD (MLC), slide-in compact	
5AC901.CSSD-05	256 GB SATA slide-in compact SSD (MLC)	
5AC901.CCFA-00	CFast adapter for operating a CFast card in a slide-in compact slot	

Table 45: Slide-in compact slot

Information:

For information about installing or replacing a slide-in compact drive, please refer to the section "Installing and replacing the slide-in compact drive" on page 142.

2.4.16 Slide-in slot

The slide-in slot is integrated on the bus unit, meaning that it is only available when the bus unit is installed. It is connected to the chipset internally via SATA 2 and USB with SATA II design (SATA 3.0 Gbit/s).

Slide-in slot		
Connection	SATA 2 and USB	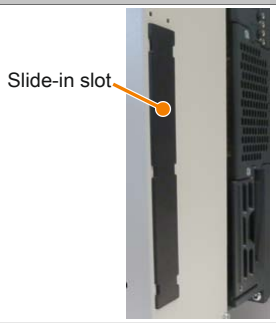
Model number	**Short description**	
	Drives	
5AC901.SDVW-00	DVD-R/RW DVD+R/RW SATA drive, slide-in	
5AC901.SSCA-00	Slide-in compact adapter for operating a slide-in compact drive in a slide-in slot.	

Table 46: Slide-in slot

Information:

For information about installing or replacing a slide-in drive, please refer to the section "Installing a slide-in drive" on page 150.

2.4.17 Main memory slots

The Panel PC 900 provides 2 slots for DDR3 main memory modules.

Main memory slots		
Speed	DDR3-1600 (PC3-12800)	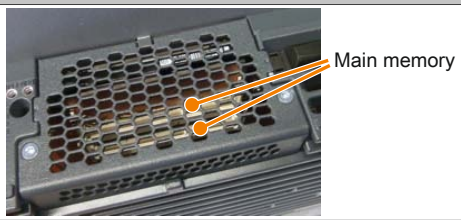
Model number	**Short description**	
	Main memory	
5MMDDR.1024-03	SO-DIMM DDR3, 1024 MB	
5MMDDR.2048-03	SO-DIMM DDR3, 2048 MB	
5MMDDR.4096-03	SO-DIMM DDR3, 4096 MB	
5MMDDR.8192-03	SO-DIMM DDR3, 8192 MB	

Table 47: Main memory slots

Information:

For information about installing or replacing main memory, please refer to the section "Replacing the main memory modules" on page 137.

Caution!

If only one main memory module is to be used, it must be installed in RAM slot 2.

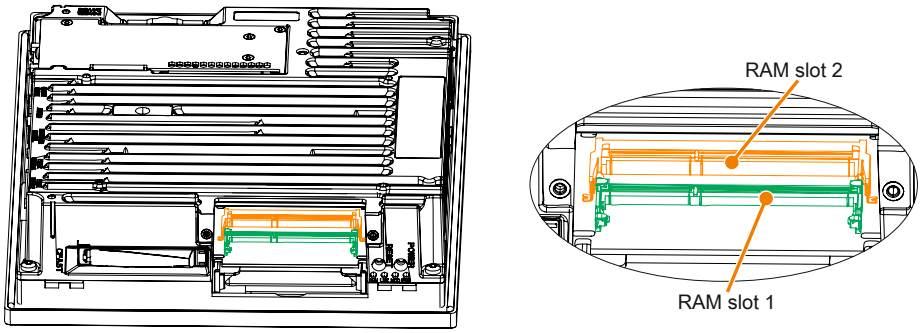

2.4.18 IF option 1 slot

The Panel PC system units include 2 slots for interface options.

The following table lists the interface options that can be used in the IF option 1 slot.

IF option 1 slot	
Model number	**Short description**
	Interface option
5AC901.I485-00[1)]	RS232/422/485 interface option; for installation in an APC910 or PPC900
5AC901.ICAN-00[1)2)]	CAN interface option; for installation in an APC910 or PPC900
5AC901.IHDA-00	Audio interface option, connection for 1x MIC, 1x Line IN, 1x Line OUT, for installation in an APC910
5AC901.IRDY-00	Ready relay interface option; for installation in an APC910 or PPC900
5AC901.IUPS-00[3)]	UPS interface option; for installation in an APC910; for a 4.5 Ah battery.
5AC901.IUPS-01[4)]	UPS interface option; for installation in an APC910; for a 2.2 Ah battery.

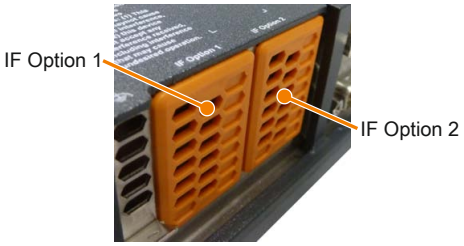

Table 48: IF option 1 slot

1) If IF options 5AC901.I458-00 and 5AC901.ICAN-00 are used simultaneously, 5AC901.ICAN-00 should be installed in the IF option 1 slot and 5AC901.I485-00 should be installed in the IF option 2 slot.
2) It is not possible to operate two 5AC901.ICAN interface options (in the IF option 1 and IF option 2 slots) at the same time.
3) The 5AC901.IUPS-00 UPS IF option is only permitted to be operated with the 5AC901.BUPS-00 battery unit!
4) The 5AC901.IUPS-01 UPS IF option is only permitted to be operated with the 5AC901.BUPS-01 battery unit!

Information:

For information about installing or replacing an interface option, please refer to the section "Installing the interface option" on page 139.

2.4.19 IF option 2 slot

The Panel PC system units include 2 slots for interface options.

The following table lists the interface options that can be used in the IF option 2 slot.

IF option 2 slot	
Model number	**Short description**
	Interface option
5AC901.I485-00[1)]	RS232/422/485 interface option; for installation in an APC910 or PPC900
5AC901.ICAN-00[1)2)]	CAN interface option; for installation in an APC910 or PPC900
5AC901.ISRM-00	SRAM interface option, 2 MB; for installation in an APC910 or PPC900
5AC901.IRDY-00	Ready relay interface option; for installation in an APC910 or PPC900

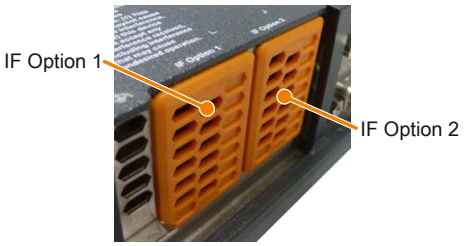

Table 49: IF option 2 slot

1) If IF options 5AC901.I458-00 and 5AC901.ICAN-00 are used simultaneously, 5AC901.ICAN-00 should be installed in the IF option 1 slot and 5AC901.I485-00 should be installed in the IF option 2 slot.
2) It is not possible to operate two 5AC901.ICAN interface options (in the IF option 1 and IF option 2 slots) at the same time.

Information:

For information about installing or replacing an interface option, please refer to the section "Installing the interface option" on page 139.

2.4.20 Card slot (PCI / PCIe)

If a bus unit is installed in the Panel PC 900, the bus unit variant being used will determine whether a standard PCI 2.2 half-size card or PCI Express (PCIe) half-size card can be inserted. They cannot exceed the following dimensions.

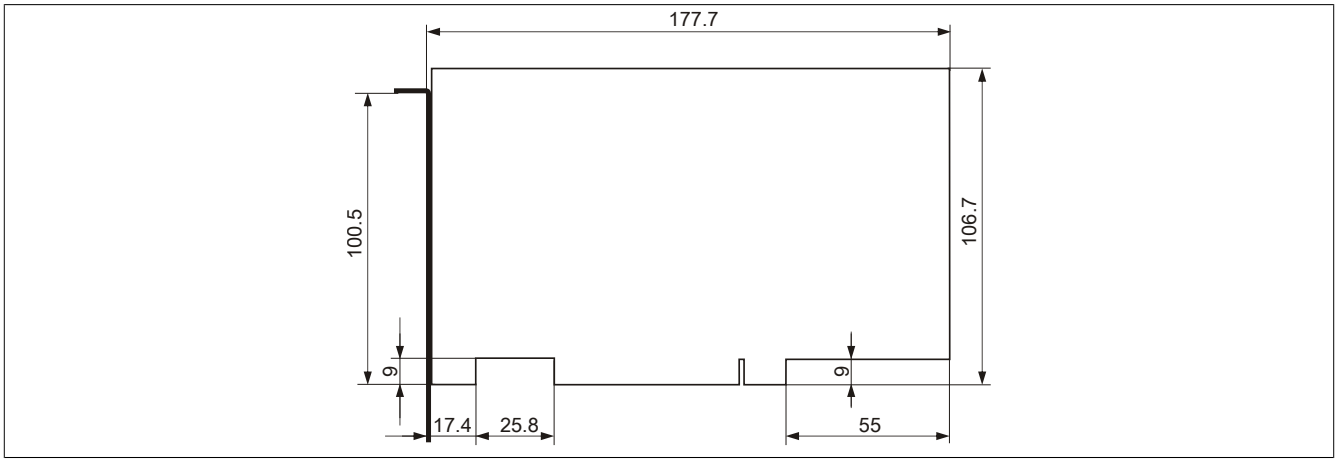

Figure 15: Standard half-size 32-bit PCI card - Dimensions

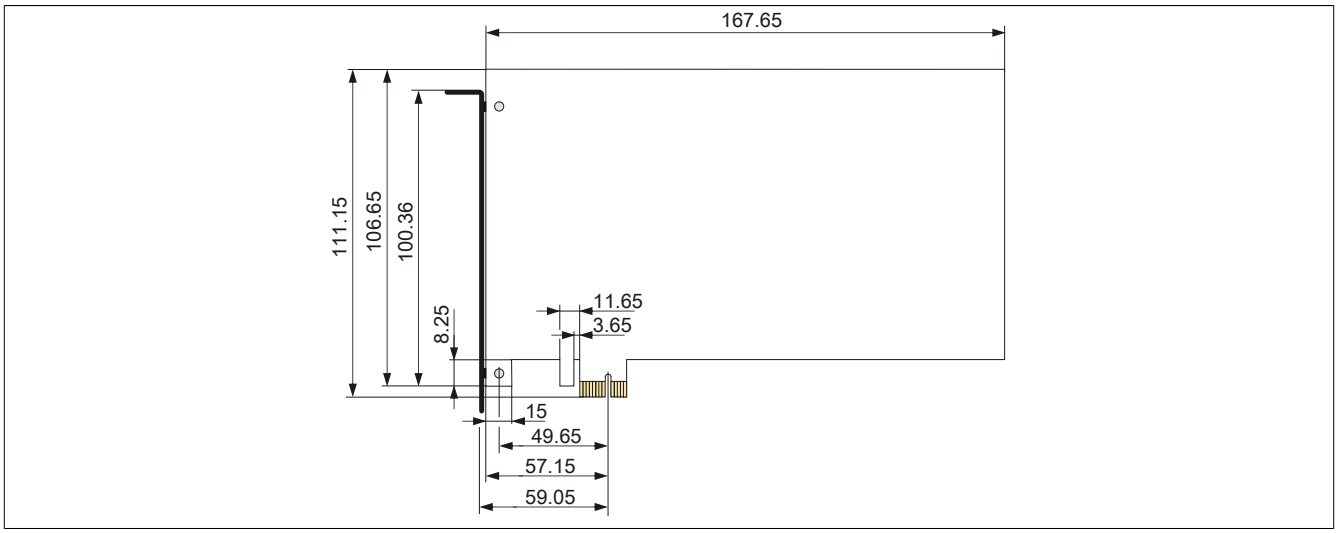

Figure 16: Standard half-size PCIe card - Dimensions

Information:

For information about installing or replacing a PCI / PCIe card, please refer to the section "Installing PCI / PCIe cards" on page 148.

2.5 Serial number sticker

A unique serial number sticker with a barcode (Code 128) is affixed to each B&R device for identification purposes. This serial number represents all of the individual components built into the system (model number, name, revision, serial number, delivery date and duration of warranty).

A sticker with the Panel PC 900's configuration number is located on the back of the device.

Three stickers are also included with the Panel PC 900 with detailed information of the installed components. Two of these stickers can be affixed individually.

This information can also be found on the B&R website by entering the serial number of the complete system in the search field tab (after selecting the "Serial number" option) at the top of the website www.br-automation.com. The search provides a detailed list of installed components.

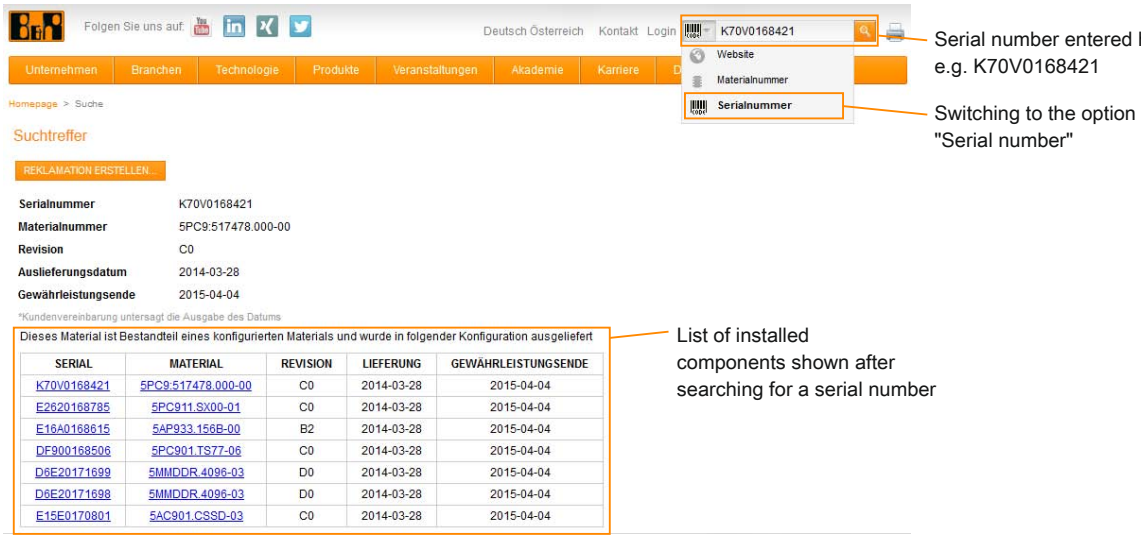

Figure 17: Searching for a serial number on the B&R website

3 Individual components

3.1 Display units

3.1.1 5AP923.1215-00

3.1.1.1 General information

- Display unit for AP9x3, PPC900 or PPC2100
- 12.1" TFT XGA color display
- Single-touch (analog resistive)
- Black aluminum front
- IP65 protection (on front)

3.1.1.2 Order data

Model number	Short description	Figure
	Display units	
5AP923.1215-00	Automation Panel 12.1" XGA TFT - 1024 x 768 pixels (4:3) - Single-touch (analog resistive) - IP65 protection (front)	

Table 50: 5AP923.1215-00 - Order data

3.1.1.3 Technical data

Product ID	5AP923.1215-00
General information	
B&R ID code	0xE1B0
Certification cULus cULus HazLoc Class 1 Division 2	 Yes Yes [1]
Display	
Type	Color TFT
Display size	12.1"
Colors	16.2 million
Resolution	XGA, 1024 x 768 pixels
Contrast	700:1
Viewing angles Horizontal Vertical	 Direction R / Direction L = 80° Direction U / Direction D = 80°
Backlight Classification Brightness Half-brightness time [2]	 LED 500 cd/m² 50,000 h
Touch screen [3] Type Technologies Controller Transmittance	 AMT Analog, resistive B&R, serial, 12-bit 80% ±3%
Mechanical characteristics	
Front Frame Design Gasket	 Aluminum paint Black 3 mm built-in seal

Table 51: 5AP923.1215-00 - Technical data

Product ID	5AP923.1215-00
Dimensions	
Width	315 mm
Height	239 mm
Weight	2200 g

Table 51: 5AP923.1215-00 - Technical data

1) Yes, although applies only if all components installed within the complete system have this certification
2) At an ambient temperature of 25°C. Reducing the brightness by 50% can result in an approximately 50% increase in the half-brightness time.
3) Touch screen drivers for approved operating systems are available in the Downloads section of the B&R website.

3.1.1.4 Dimensions

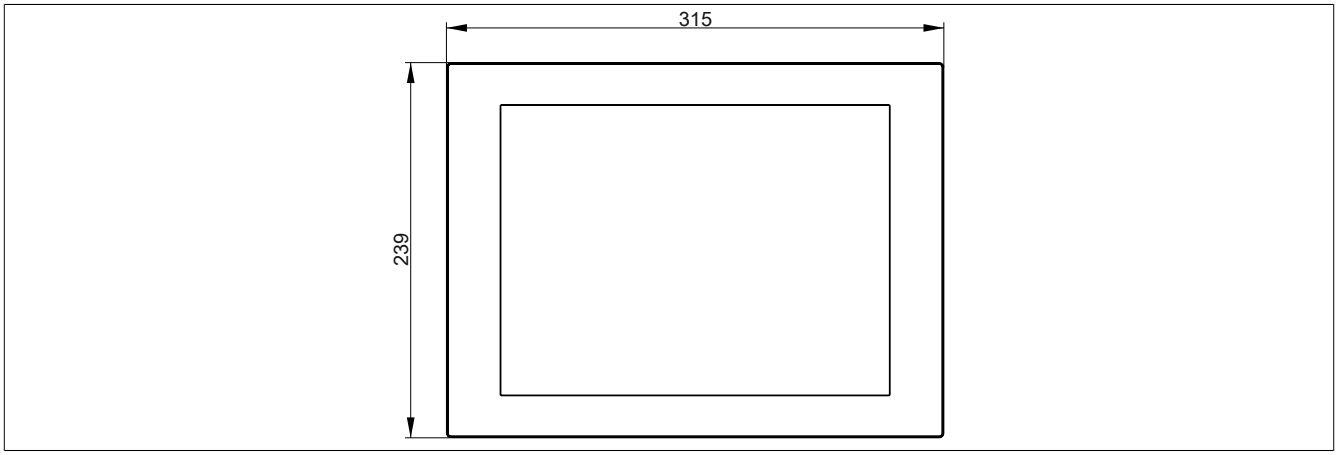

Figure 18: 5AP23.1215-00 - Dimensions

3.1.1.5 Temperature humidity diagram

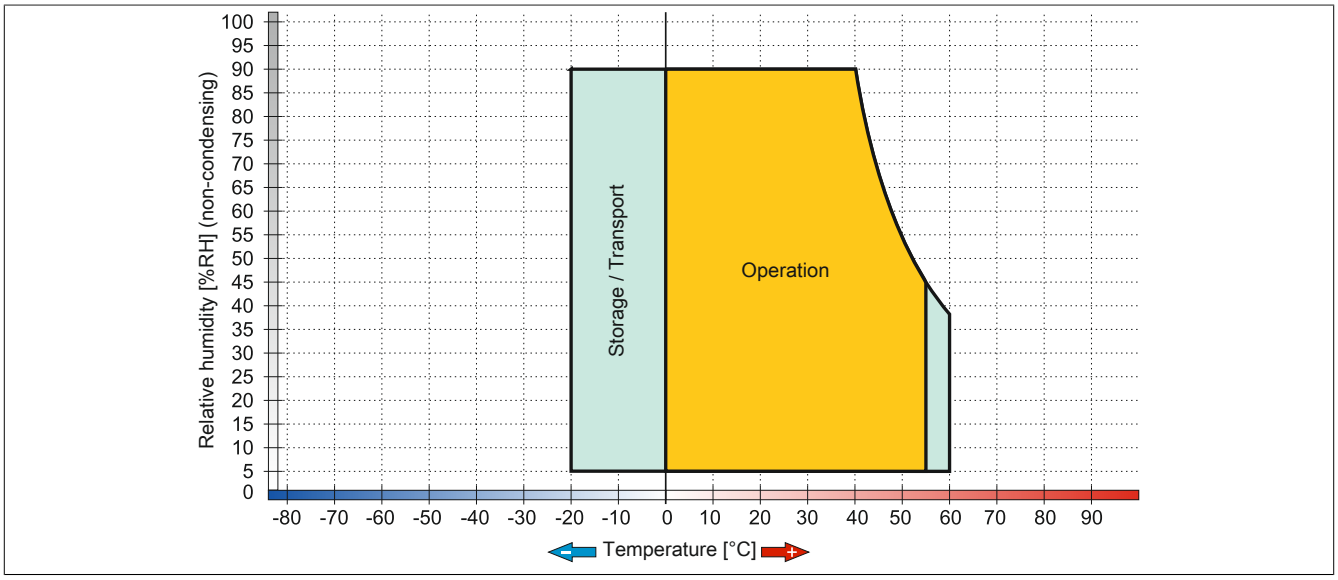

Figure 19: 5AP923.1215-00 - Temperature humidity diagram

3.1.2 5AP923.1505-00

3.1.2.1 General information

- Display unit for AP9x3, PPC900 or PPC2100
- 15.0" TFT XGA color display
- Single-touch (analog resistive)
- Black aluminum front
- IP65 protection (on front)

3.1.2.2 Order data

Model number	Short description	Figure
	Display units	
5AP923.1505-00	Automation Panel 15.0" XGA TFT - 1024 x 768 pixels (4:3) - Single-touch (analog resistive) - IP65 protection (front)	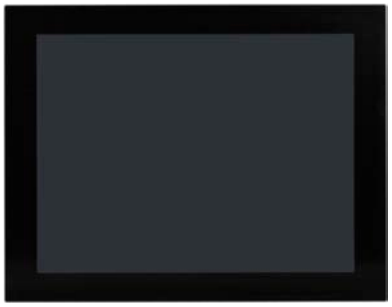

Table 52: 5AP923.1505-00 - Order data

3.1.2.3 Technical data

Product ID	5AP923.1505-00
General information	
B&R ID code	0xE169
Certification	
cULus	Yes
GOST-R	Yes
Display	
Type	Color TFT
Display size	15.0"
Colors	16.2 million
Resolution	XGA, 1024 x 768 pixels
Contrast	700:1
Viewing angles	
Horizontal	Direction R / Direction L = 80°
Vertical	Direction U / Direction D = 70°
Backlight	
Classification	LED
Brightness	350 cd/m²
Half-brightness time [1]	50,000 h
Touch screen [2]	
Type	AMT
Technologies	Analog, resistive
Controller	B&R, serial, 12-bit
Transmittance	81% ±3%
Mechanical characteristics	
Front	
Frame	Aluminum paint
Design	Black
Gasket	3 mm built-in seal
Dimensions	
Width	370 mm
Height	288 mm
Weight	3700 g

Table 53: 5AP923.1505-00 - Technical data

1) At an ambient temperature of 25°C. Reducing the brightness by 50% can result in an approximately 50% increase in the half-brightness time.
2) Touch screen drivers for approved operating systems are available in the Downloads section of the B&R website.

3.1.2.4 Dimensions

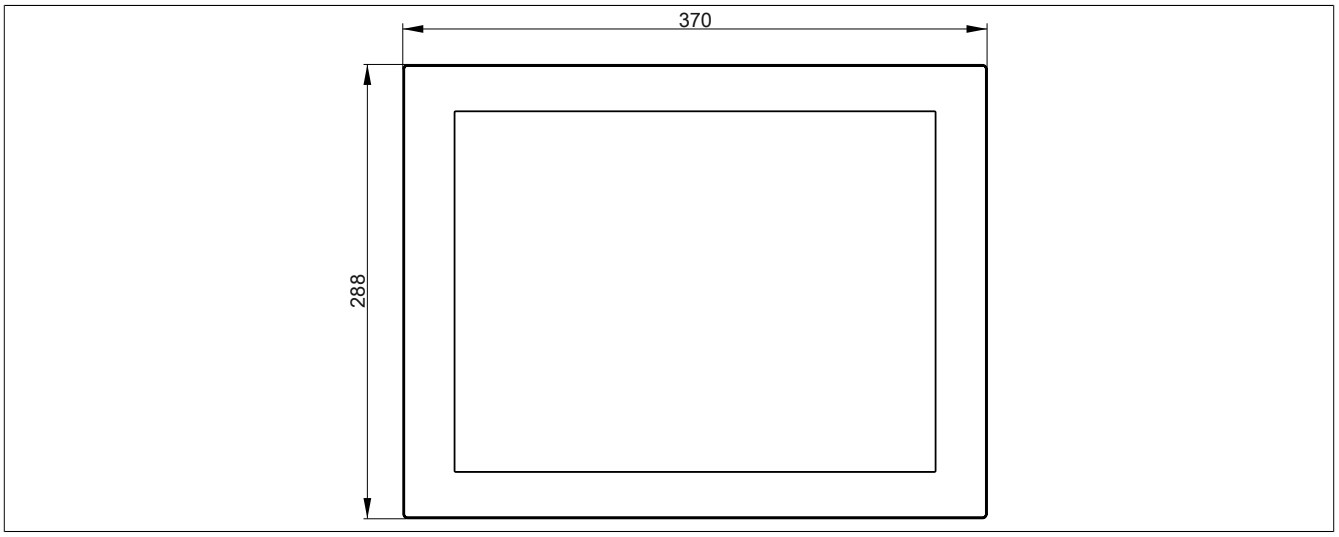

Figure 20: 5AP23.1505-00 - Dimensions

3.1.2.5 Temperature humidity diagram

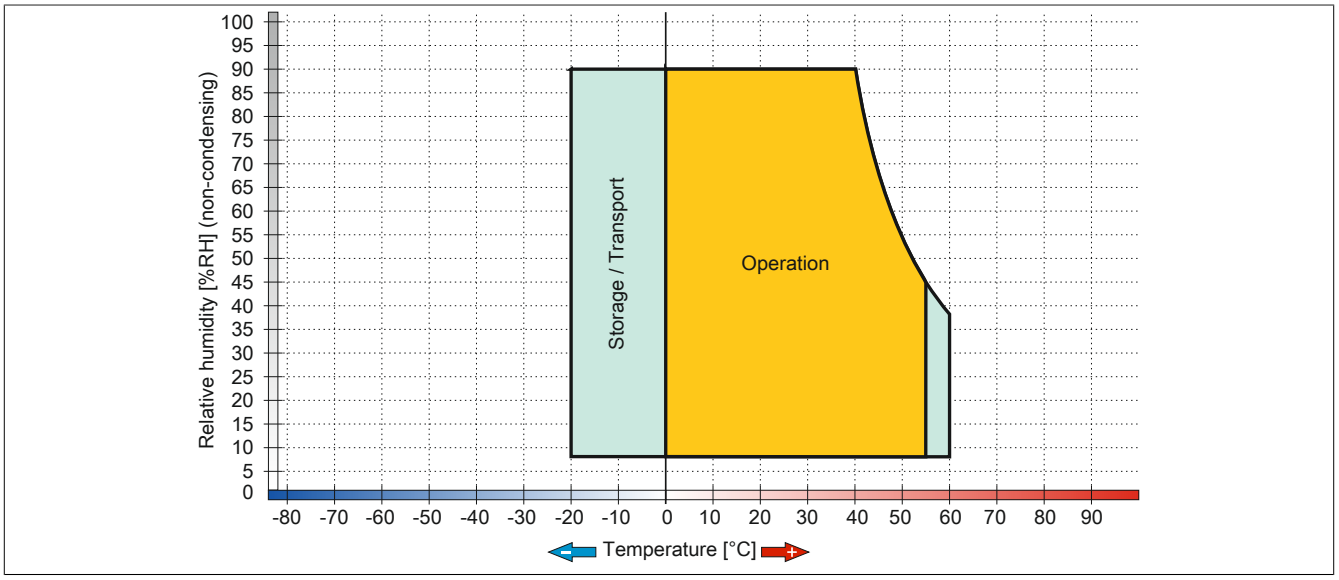

Figure 21: 5AP923.1505-00 - Temperature humidity diagram

3.1.3 5AP923.1906-00

3.1.3.1 General information

- Display unit for AP9x3, PPC900 or PPC2100
- 190" TFT SXGA color display
- Single-touch (analog resistive)
- Black aluminum front
- IP65 protection (on front)

3.1.3.2 Order data

Model number	Short description	Figure
	Display units	
5AP923.1906-00	Automation Panel 19.0" SXGA TFT - 1280 x 1024 pixels (4:3) - Single-touch (analog resistive) - IP65 protection (front)	

Table 54: 5AP923.1906-00 - Order data

3.1.3.3 Technical data

Product ID	5AP923.1906-00
General information	
B&R ID code	0xE1B1
Certification cULus	 Yes
Display	
Type	Color TFT
Display size	19.0"
Colors	16.7 million
Resolution	SXGA, 1280 x 1024 pixels
Contrast	2000:1
Viewing angles Horizontal Vertical	 Direction R / Direction L = 89° Direction U / Direction D = 89°
Backlight Classification Brightness Half-brightness time [1]	 LED 300 cd/m² 50,000 h
Touch screen [2] Type Technologies Controller Transmittance	 AMT Analog, resistive B&R, serial, 12-bit 81% ±3%
Operating conditions	
EN 60529 protection	IP65
Mechanical characteristics	
Front Frame Design Gasket	 Aluminum paint Black 3 mm built-in seal
Dimensions Width Height	 440 mm 358 mm
Weight	5800 g

Table 55: 5AP923.1906-00 - Technical data

1) At an ambient temperature of 25°C. Reducing the brightness by 50% can result in an approximately 50% increase in the half-brightness time.
2) Touch screen drivers for approved operating systems are available in the Downloads section of the B&R website.

3.1.3.4 Dimensions

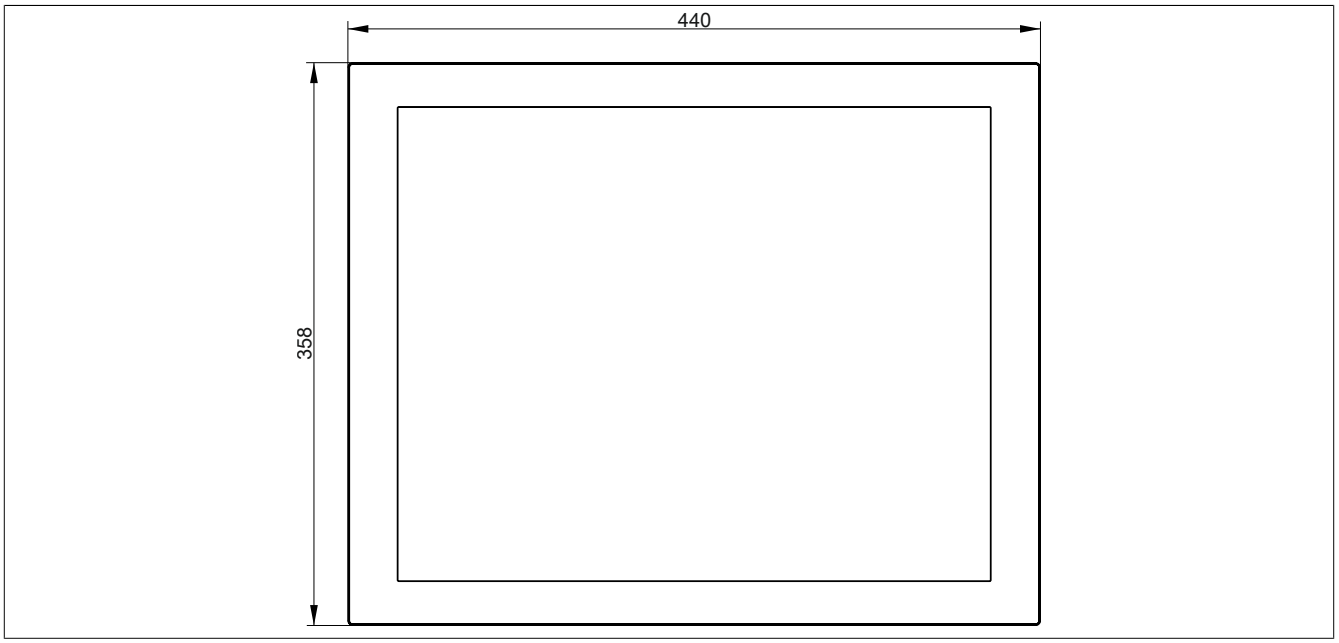

Figure 22: 5AP23.1906-00 - Dimensions

3.1.3.5 Temperature humidity diagram

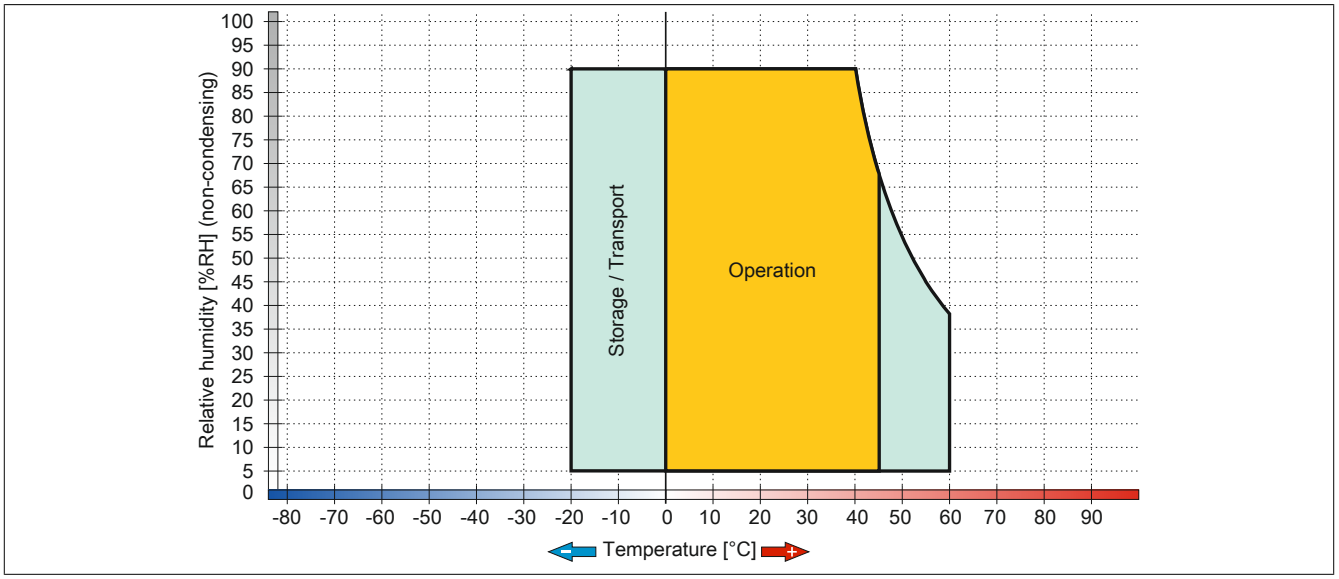

Figure 23: 5AP923.1906-00 - Temperature humidity diagram

3.1.4 5AP933.156B-00

3.1.4.1 General information

- Display unit for AP9x3, PPC900 or PPC2100
- 15.6" TFT HD color display
- Multi-touch (PCT)
- Black aluminum front
- IP65 protection (on front)

3.1.4.2 Order data

Model number	Short description	Figure
	Display units	
5AP933.156B-00	Automation Panel 15.6" HD TFT - 1366 x 768 pixels (16:9) - Multi-touch (projected capacitive) - IP65 protection (front)	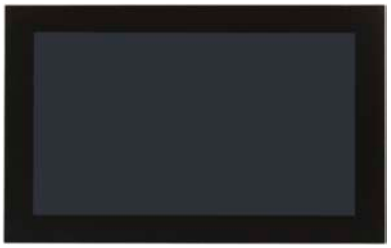

Table 56: 5AP933.156B-00 - Order data

3.1.4.3 Technical data

Product ID	5AP933.156B-00
General information	
B&R ID code	0xE16A
Certification GOST-R	 Yes
Display	
Type	Color TFT
Display size	15.6"
Colors	16.7 million
Resolution	HD, 1366 x 768 pixels
Contrast	500:1
Viewing angles Horizontal Vertical	 Direction R / Direction L = 85° Direction U / Direction D = 80°
Backlight Classification Brightness Half-brightness time [1]	 LED 300 cd/m² 50,000 h
Touch screen Type Technologies Controller Transmittance	 3M Projected capacitive touch (PCT) 3M 88% ±2%
Mechanical characteristics	
Front Frame Design Gasket	 Aluminum paint Black 3 mm built-in seal
Dimensions Width Height	 414 mm 258.5 mm
Weight	3850 g

Table 57: 5AP933.156B-00 - Technical data

1) At an ambient temperature of 25°C. Reducing the brightness by 50% can result in an approximately 50% increase in the half-brightness time.

3.1.4.4 Dimensions

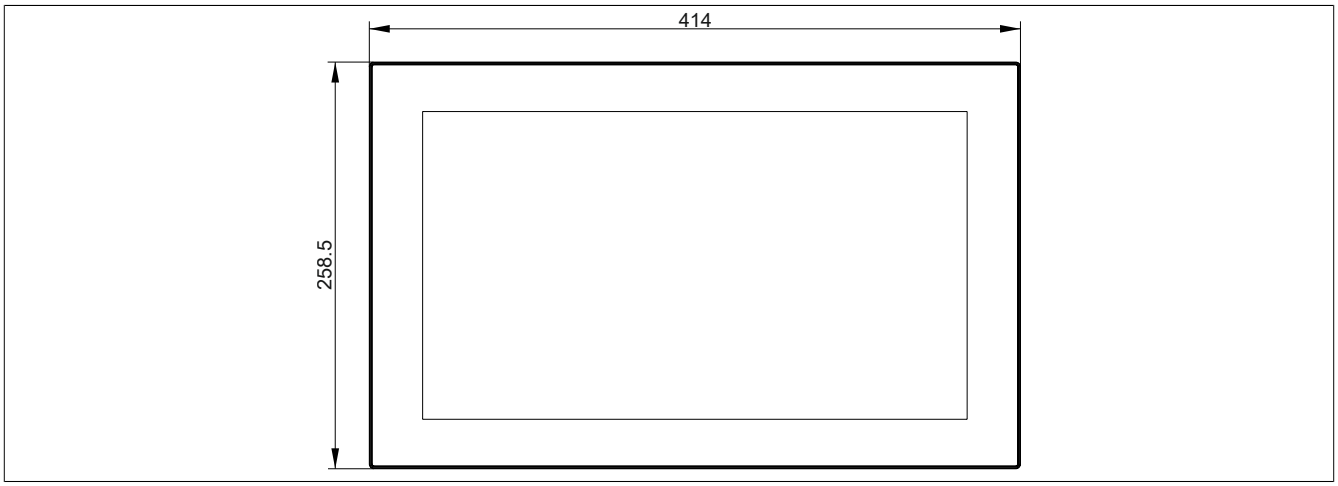

Figure 24: 5AP933.156B-00 - Dimensions

3.1.4.5 Temperature humidity diagram

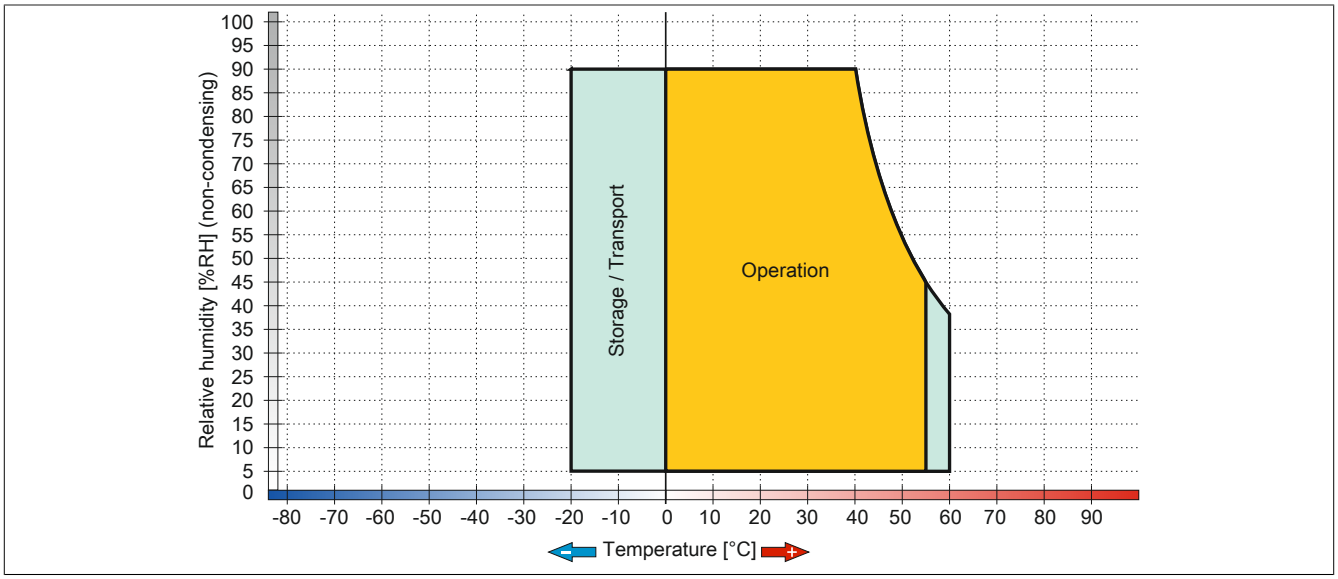

Figure 25: 5AP933.156B-00 - Temperature humidity diagram

3.1.5 5AP933.185B-00

3.1.5.1 General information

- Display unit for AP9x3, PPC900 or PPC2100
- 18.5" TFT HD color display
- Multi-touch (PCT)
- Black aluminum front
- IP65 protection (on front)

3.1.5.2 Order data

Model number	Short description	Figure
	Display units	
5AP933.185B-00	Automation Panel 18.5" HD TFT - 1366 x 768 pixels (16:9) - Multi-touch (projected capacitive) - IP65 protection (front)	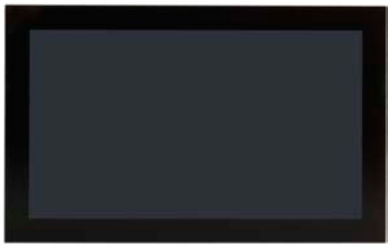

Table 58: 5AP933.185B-00 - Order data

3.1.5.3 Technical data

Product ID	5AP933.185B-00
General information	
B&R ID code	0xE16B
Certification GOST-R	 Yes
Display	
Type	Color TFT
Display size	18.5"
Colors	16.7 million
Resolution	HD, 1366 x 768 pixels
Contrast	1000:1
Viewing angles Horizontal Vertical	 Direction R / Direction L = 85° Direction U / Direction D = 80°
Backlight Classification Brightness Half-brightness time [1]	 LED 300 cd/m² 50,000 h
Touch screen Type Technologies Controller Transmittance	 3M Projected capacitive touch (PCT) 3M 88% ±2%
Mechanical characteristics	
Front Frame Design Gasket	 Aluminum paint Black 3 mm built-in seal
Dimensions Width Height	 475 mm 295 mm
Weight	4850 g

Table 59: 5AP933.185B-00 - Technical data

1) At an ambient temperature of 25°C. Reducing the brightness by 50% can result in an approximately 50% increase in the half-brightness time.

3.1.5.4 Dimensions

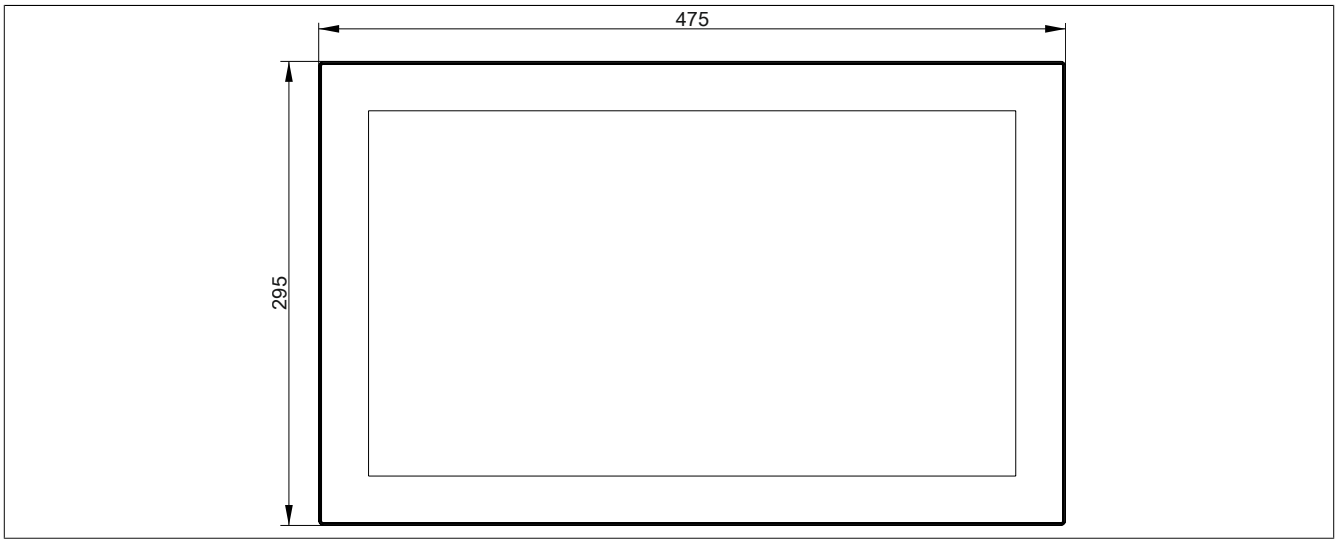

Figure 26: 5AP933.185B-00 - Dimensions

3.1.5.5 Temperature humidity diagram

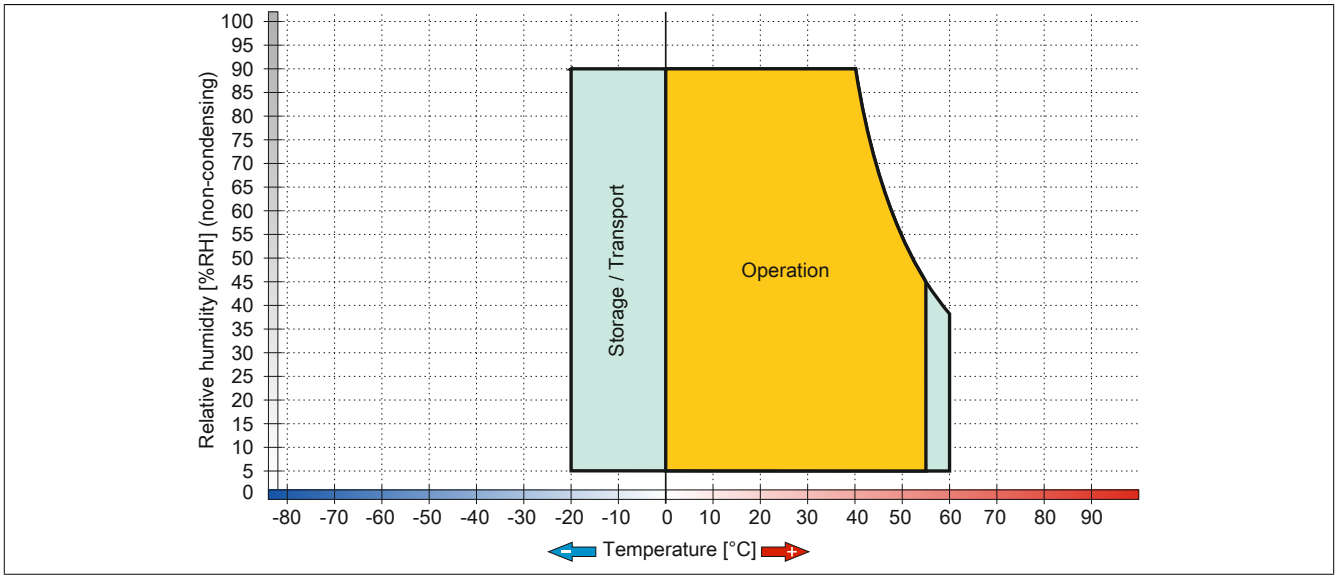

Figure 27: 5AP933.185B-00 - Temperature humidity diagram

3.1.6 5AP933.215C-00

3.1.6.1 General information

- Display unit for AP9x3, PPC900 or PPC2100
- 21.5" TFT FHD color display
- Multi-touch (PCT)
- Black aluminum front
- IP65 protection (on front)

3.1.6.2 Order data

Model number	Short description	Figure
	Display units	
5AP933.215C-00	Automation Panel 21.5" Full HD TFT - 1920 x 1080 pixels (16:9) - Multi-touch (projected capacitive) - IP65 protection (front)	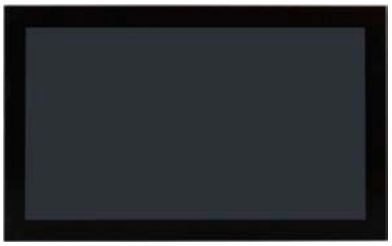

Table 60: 5AP933.215C-00 - Order data

3.1.6.3 Technical data

Product ID	5AP933.215C-00
General information	
B&R ID code	0xE16C
Certification	
GOST-R	Yes
Display	
Type	Color TFT
Display size	21.5"
Colors	16.7 million
Resolution	FHD, 1920 x 1080 pixels
Contrast	1000:1
Viewing angles	
Horizontal	Direction R / Direction L = 89°
Vertical	Direction U / Direction D = 89°
Backlight	
Classification	LED
Brightness	250 cd/m²
Half-brightness time [1]	30,000 h
Touch screen	
Type	3M
Technologies	Projected capacitive touch (PCT)
Controller	3M
Transmittance	88% ±2%
Mechanical characteristics	
Front	
Frame	Aluminum paint
Design	Black
Gasket	3 mm built-in seal
Dimensions	
Width	541.5 mm
Height	333 mm
Weight	5400 g

Table 61: 5AP933.215C-00 - Technical data

1) At an ambient temperature of 25°C. Reducing the brightness by 50% can result in an approximately 50% increase in the half-brightness time.

3.1.6.4 Dimensions

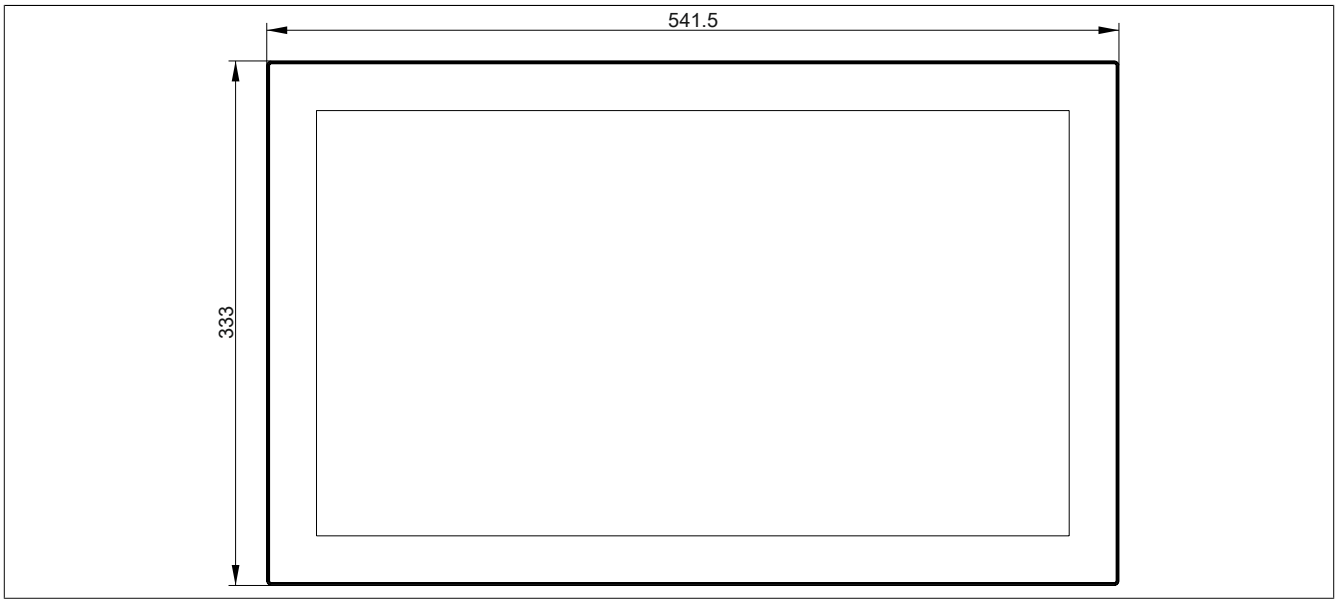

Figure 28: 5AP933.215C-00 - Dimensions

3.1.6.5 Temperature humidity diagram

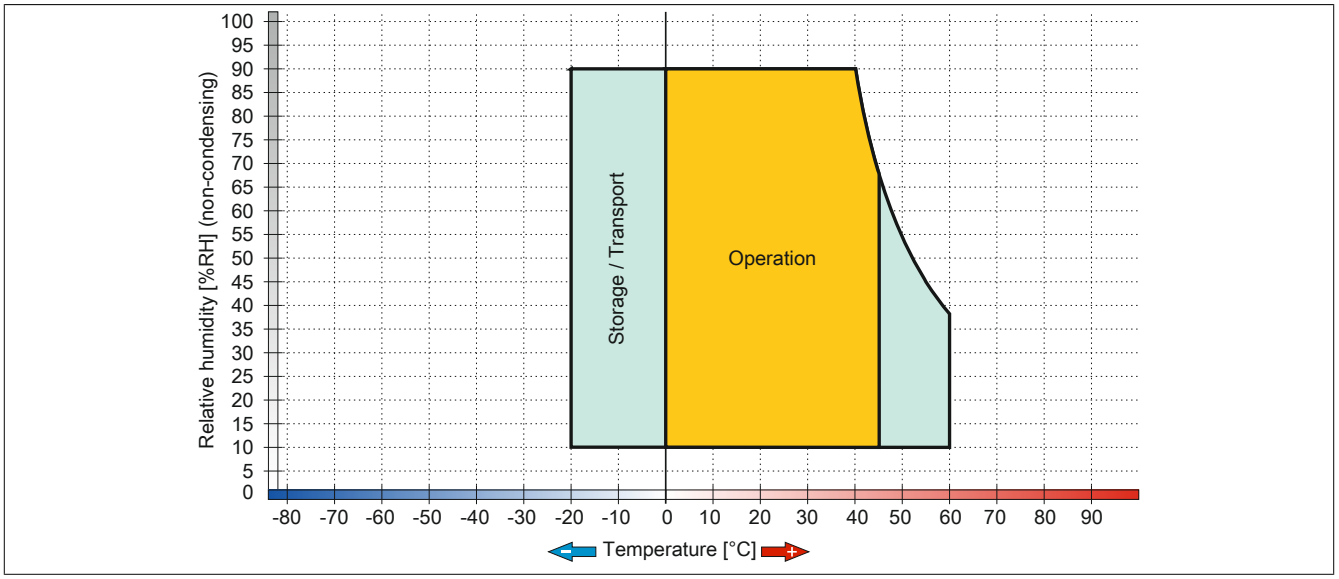

Figure 29: 5AP933.215C-00 - Temperature humidity diagram

3.1.7 5AP933.240C-00

3.1.7.1 General information

- Display unit for AP9x3, PPC900 or PPC2100
- 24" TFT FHD color display
- Multi-touch (PCT)
- Black aluminum front
- IP65 protection (on front)

3.1.7.2 Order data

Model number	Short description	Figure
	Display units	
5AP933.240C-00	Automation Panel 24.0" Full HD TFT - 1920 x 1080 pixels (16:9) - Multi-touch (projected capacitive) - IP65 protection (front)	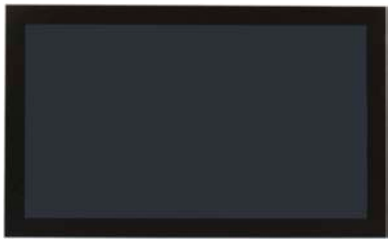

Table 62: 5AP933.240C-00 - Order data

3.1.7.3 Technical data

Product ID	5AP933.240C-00
General information	
B&R ID code	0xE1B4
Display	
Type	Color TFT
Display size	24.0"
Colors	16.7 million
Resolution	FHD, 1920 x 1080 pixels
Contrast	5000:1
Viewing angles	
Horizontal	Direction R / Direction L = 89°
Vertical	Direction U / Direction D = 89°
Backlight	
Classification	LED
Brightness	300 cd/m²
Half-brightness time [1]	50,000 h
Touch screen	
Type	3M
Technologies	Projected capacitive touch (PCT)
Controller	3M
Transmittance	88% ±2%
Mechanical characteristics	
Front	
Frame	Aluminum paint
Design	Black
Gasket	3 mm built-in seal
Dimensions	
Width	598.5 mm
Height	364 mm
Weight	Approx. 7800 g

Table 63: 5AP933.240C-00 - Technical data

1) At an ambient temperature of 25°C. Reducing the brightness by 50% can result in an approximately 50% increase in the half-brightness time.

3.1.7.4 Dimensions

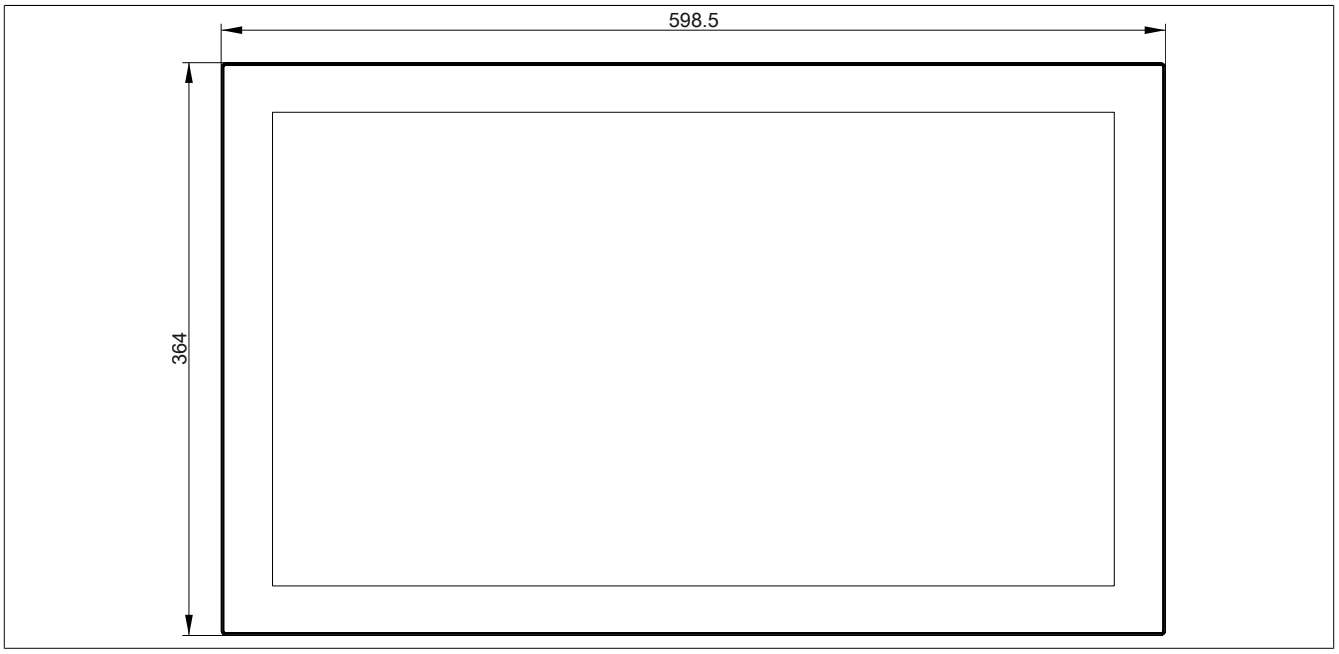

Figure 30: 5AP933.240C-00 - Dimensions

3.1.7.5 Temperature humidity diagram

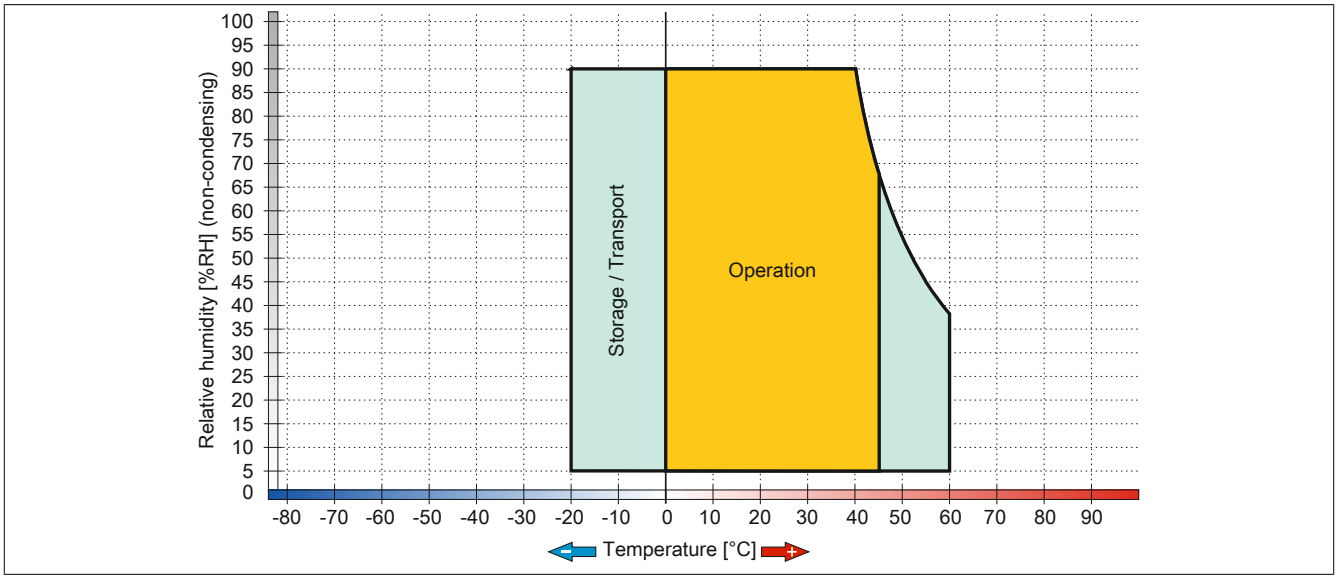

Figure 31: 5AP933.240C-00 - Temperature humidity diagram

3.2 QM77 CPU boards

3.2.1 5PC901.TS77-0x

3.2.1.1 General information

- Intel® Core™ i-series processors
- Intel® QM77 chipset
- 2x DDR3 memory socket
- Intel® HD Graphics 4000
- AMI BIOS (UEFI)

Information:

Operating the 5PC901.TS77-00 CPU boards is only possible if the system unit is equipped with a fan kit (active, 5PC911.SX00-00).

3.2.1.2 Order data

Model number	Short description	Figure
	CPU boards	
5PC901.TS77-00	CPU board Intel Core i7 3615QE 2.3 GHz - Quad core - QM77 chipset - For Panel PC 900	
5PC901.TS77-01	CPU board Intel Core i7 3612QE 2.1 GHz - Quad core - QM77 chipset - For Panel PC 900	
5PC901.TS77-02	CPU board Intel Core i7 3555LE 2.5 GHz - Dual core - QM77 chipset - For Panel PC 900	
5PC901.TS77-03	CPU board Intel Core i7 3517UE 1.7 GHz - Dual core - QM77 chipset - For Panel PC 900	
5PC901.TS77-04	CPU board Intel Core i5 3610ME 2.7 GHz - Dual core - QM77 chipset - For Panel PC 900	
5PC901.TS77-05	CPU board Intel Core i3 3120ME 2.4 GHz - Dual core - QM77 chipset - For Panel PC 900	
5PC901.TS77-06	CPU board Intel Core i3 3217UE 1.6 GHz - Dual core - QM77 chipset - For Panel PC 900	
	Required accessories	
	Main memory	
5MMDDR.1024-03	SO-DIMM DDR3, 1024 MB	
5MMDDR.2048-03	SO-DIMM DDR3, 2048 MB	
5MMDDR.4096-03	SO-DIMM DDR3, 4096 MB	
5MMDDR.8192-03	SO-DIMM DDR3, 8192 MB	

Table 64: 5PC901.TS77-00, 5PC901.TS77-01, 5PC901.TS77-02, 5PC901.TS77-03, 5PC901.TS77-04, 5PC901.TS77-05, 5PC901.TS77-06 - Order data

3.2.1.3 Technical data

Product ID	5PC901. TS77-00	5PC901. TS77-01	5PC901. TS77-02	5PC901. TS77-03	5PC901. TS77-04	5PC901. TS77-05	5PC901. TS77-06
General information							
Cooling	Passive via heat sink						
LEDs	Power, HDD, Link, Run						
B&R ID code	0xDF8A	0xDF8B	0xDF8C	0xDF8D	0xDF8E	0xDF8F	0xDF90
Battery							
Type	Renata 950 mAh						
Service life	4 years [1]						
Removable	Yes, on the back side of the Panel PC						
Design	Lithium ion						
Power button	Yes						
Reset button	Yes						
Buzzer	Yes						
Certification							
CE	Yes						
cULus	Yes						
cULus HazLoc Class 1 Division 2	Yes [2]						
GOST-R	Yes						
Controller							
Boot loader	BIOS						

Table 65: 5PC901.TS77-00, 5PC901.TS77-01, 5PC901.TS77-02, 5PC901.TS77-03, 5PC901.TS77-04, 5PC901.TS77-05, 5PC901.TS77-06 - Technical data

Product ID	5PC901.TS77-00	5PC901.TS77-01	5PC901.TS77-02	5PC901.TS77-03	5PC901.TS77-04	5PC901.TS77-05	5PC901.TS77-06
Processor							
Type	Intel® Core™ i7 3615QE	Intel® Core™ i7 3612QE	Intel® Core™ i7 3555LE	Intel® Core™ i7 3555LE	Intel® Core™ i5 3610ME	Intel® Core™ i3 3120ME	Intel® Core™ i3 3217UE
Clock frequency	2300 MHz	2100 MHz	2500 MHz	1700 MHz	2700 MHz	2400 MHz	1600 MHz
Number of cores	4	4	2	2	2	2	2
Architectures	22 nm						
Intel® Smart Cache	6 MB	6 MB	4 MB	4 MB	3 MB	3 MB	3 MB
External bus	DMI, 5 GT/s						
Intel® 64 Architecture	Yes						
Intel® Turbo Boost Technology	2.0	2.0	2.0	2.0	2.0	No	No
Intel® Hyper-Threading Technology	Yes						
Intel® Virtualization Technology (VT-x)	Yes						
Enhanced Intel SpeedStep® Technology	Yes						
Chipset	Intel® QM77						
Real-time clock							
Precision	At 25°C: typ. 12 ppm (1 seconds) per day [3]						
Battery backed	Yes						
Power failure logic							
Controller	MTCX [4]						
Buffer time	10 ms						
Memory socket							
Number of memory channels	2						
Type	DDR3						
Memory size	Max. 16 GB						
Max. memory bandwidth	25.6 GB/s						
Graphics							
Controller	Intel® HD Graphics 4000						
Max. dynamic graphics frequency	900 MHz						
Color depth	Max. 32-bit						
Resolution							
DVI	Resolution up to 1920 x 1200 (WUXGA)						
RGB	350 MHz RAMDAC, resolution up to 2048 x 1536 @ 75 Hz (QXGA)						
Mass memory management	3x SATA						
Power management	ACPI 4.0 with battery support						
Interfaces							
COM1							
Type	RS232, modem-capable, not electrically isolated						
Design	9-pin male DSUB connector						
UART	16550-compatible, 16-byte FIFO						
Max. baud rate	115 kbit/s						
COM2							
Type	RS232, modem-capable, not electrically isolated						
Design	9-pin male DSUB connector						
UART	16550-compatible, 16-byte FIFO						
Max. baud rate	115 kbit/s						
CFast slot							
Quantity	1						
Type	SATA III (SATA 6.0 Gbit/s)						
USB							
Quantity	4						
Type	USB 3.0 (on bottom)						
Design	Type A						
Transfer rate	Low speed (1.5 Mbit/s), full speed (12 Mbit/s), high speed (480 Mbit/s), super speed (5 Gbit/s) [5]						
Current load	Max. 1 A per connection						
Ethernet							
Quantity	2						
Design	Shielded RJ45 port						
Transfer rate	10/100/1000 Mbit/s						
Max. baud rate	1 Gbit/s						
Monitor/Panel interface							
Design	Female DVI-I connector						
Type	SDL/DVI/Monitor						
Audio							
Type	HDA						
Controller	Realtek RTL888						
Inputs	Microphone, Line IN						
Outputs	Line OUT						
Inserts							
Slide-in compact drives							
Quantity	1						
Type	SATA III (SATA 6.0 Gbit/s)						
Interface option	2						

Table 65: 5PC901.TS77-00, 5PC901.TS77-01, 5PC901.TS77-02, 5PC901.TS77-03, 5PC901.TS77-04, 5PC901.TS77-05, 5PC901.TS77-06 - Technical data

Product ID	5PC901.TS77-00	5PC901.TS77-01	5PC901.TS77-02	5PC901.TS77-03	5PC901.TS77-04	5PC901.TS77-05	5PC901.TS77-06
Add-on UPS slot	Yes [6]						
Insert for fan kit	Yes						
Electrical characteristics							
Nominal voltage	24 VDC ±25%						
Nominal current	5.5 A						
Starting current	Max. 60 A for <300 µs						
Electrical isolation	Yes						
Environmental conditions							
Altitude Operation	Max. 3000 m (depends on the component) [7]						
Mechanical characteristics							
Weight	Approx. 450 g						

Table 65: 5PC901.TS77-00, 5PC901.TS77-01, 5PC901.TS77-02, 5PC901.TS77-03, 5PC901.TS77-04, 5PC901.TS77-05, 5PC901.TS77-06 - Technical data

1) At 50°C, 8.5 µA of the supplied components and a self-discharge of 40%. If an SRAM interface option has been installed, the service life is 2½ years.
2) Yes, although applies only if all components installed within the complete system have this certification
3) At max. specified ambient temperature: Typ. 58 ppm (5 seconds) - worst-case 220 ppm (19 seconds).
4) Maintenance Controller Extended.
5) The super speed transfer rate (5 Gbit/s) is only possible with USB 3.0.
6) This UPS module can only be operated in the IF option 1 slot.
7) The maximum ambient temperature is typically derated by 1°C per 1000 meters (starting at 500 meters above sea level).

3.3 HM76 CPU boards

3.3.1 5PC901.TS77-0x

3.3.1.1 General information

- Intel® Celeron® processors
- Intel® HM76 chipset
- 2x DDR3 memory socket
- Intel® HD graphics 2000 / 2500
- AMI BIOS (UEFI)

3.3.1.2 Order data

Model number	Short description	Figure
	CPU boards	
5PC901.TS77-07	CPU board Intel Celeron 847E 1.1 GHz - Dual core - HM76 chipset - For Panel PC 900	
5PC901.TS77-08	CPU board Intel Celeron 827E 1.4 GHz - Single core - HM76 chipset - For Panel PC 900	
5PC901.TS77-09	CPU board Intel Celeron 1020E 2.2 GHz - Dual core - HM76 chipset - For Panel PC 900	
5PC901.TS77-10	CPU board Intel Celeron 1047UE 1.4 GHz - Dual core - HM76 chipset - For Panel PC 900	
	Required accessories	
	Main memory	
5MMDDR.1024-03	SO-DIMM DDR3, 1024 MB	
5MMDDR.2048-03	SO-DIMM DDR3, 2048 MB	
5MMDDR.4096-03	SO-DIMM DDR3, 4096 MB	
5MMDDR.8192-03	SO-DIMM DDR3, 8192 MB	

Table 66: 5PC901.TS77-07, 5PC901.TS77-08, 5PC901.TS77-09, 5PC901.TS77-10 - Order data

3.3.1.3 Technical data

Product ID	5PC901.TS77-07	5PC901.TS77-08	5PC901.TS77-09	5PC901.TS77-10
General information				
Cooling	Passive via heat sink			
LEDs	Power, HDD, Link, Run			
B&R ID code	0xDFCD	0xDFCE	0xE18E	0xE1AD
Battery				
Type	Renata 950 mAh			
Service life	4 years [1]			
Removable	Yes, on the back side of the Panel PC			
Design	Lithium ion			
Power button	Yes			
Reset button	Yes			
Buzzer	Yes			
Certification				
CE	Yes			
cULus	Yes			
cULus HazLoc Class 1 Division 2	Yes [2]			
GOST-R	Yes			
Controller				
Boot loader	BIOS			
Processor				
Type	Intel® Celeron® 847E	Intel® Celeron® 827E	Intel® Celeron® 1020E	Intel® Celeron® 1047UE
Clock frequency	1100 MHz	1400 MHz	2200 MHz	1400 MHz
Number of cores	2	1	2	2
Architectures	32 nm	32 nm	22 nm	22 nm
Intel® Smart Cache	2 MB	1.5 MB	2 MB	2 MB
External bus	DMI, 5 GT/s			
Intel® 64 Architecture	Yes			
Intel® Turbo Boost Technology	No			
Intel® Hyper-Threading Technology	No			
Intel® Virtualization Technology (VT-x)	Yes			
Enhanced Intel SpeedStep® Technology	Yes			
Chipset	Intel® HM76			

Table 67: 5PC901.TS77-07, 5PC901.TS77-08, 5PC901.TS77-09, 5PC901.TS77-10 - Technical data

Product ID	5PC901.TS77-07	5PC901.TS77-08	5PC901.TS77-09	5PC901.TS77-10
Real-time clock				
Precision	At 25°C: typ. 12 ppm (1 seconds) per day [3]			
Battery backed	Yes			
Power failure logic				
Controller	MTCX [4]			
Buffer time	10 ms			
Memory socket				
Number of memory channels	2			
Type	DDR3			
Memory size	Max. 16 GB			
Max. memory bandwidth	21.3 GB/s	21.3 GB/s	25.6 GB/s	25.6 GB/s
Graphics				
Controller	Intel® HD Graphics 2000	Intel® HD Graphics 2000	Intel® HD Graphics 2500	Intel® HD Graphics 2500
Max. dynamic graphics frequency	800 MHz	800 MHz	1 GHz	900 MHz
Color depth	Max. 32-bit			
Resolution				
DVI	Resolution up to 1920 x 1200 (WUXGA)			
RGB	350 MHz RAMDAC, resolution up to 2048 x 1536 @ 75 Hz (QXGA)			
Mass memory management	3x SATA			
Power management	ACPI 4.0 with battery support			
Interfaces				
COM1				
Type	RS232, modem-capable, not electrically isolated			
Design	9-pin male DSUB connector			
UART	16550-compatible, 16-byte FIFO			
Max. baud rate	115 kbit/s			
COM2				
Type	RS232, modem-capable, not electrically isolated			
Design	9-pin male DSUB connector			
UART	16550-compatible, 16-byte FIFO			
Max. baud rate	115 kbit/s			
CFast slot				
Quantity	1			
Type	SATA III (SATA 6.0 Gbit/s)			
USB				
Quantity	4			
Type	USB 3.0 (on bottom)			
Design	Type A			
Transfer rate	Low speed (1.5 Mbit/s), full speed (12 Mbit/s), high speed (480 Mbit/s), super speed (5 Gbit/s) [5]			
Current load	Max. 1 A per connection			
Ethernet				
Quantity	2			
Design	Shielded RJ45 port			
Transfer rate	10/100/1000 Mbit/s			
Max. baud rate	1 Gbit/s			
Monitor/Panel interface				
Design	Female DVI-I connector			
Type	SDL/DVI/Monitor			
Audio				
Type	HDA			
Controller	Realtek RTL888			
Inputs	Microphone, Line IN			
Outputs	Line OUT			
Inserts				
Slide-in compact drives				
Quantity	1			
Type	SATA III (SATA 6.0 Gbit/s)			
Interface option	2			
Add-on UPS slot	Yes [6]			
Insert for fan kit	Yes			
Electrical characteristics				
Nominal voltage	24 VDC ±25%			
Nominal current	5.5 A			
Starting current	Max. 60 A for <300 µs			
Electrical isolation	Yes			
Environmental conditions				
Altitude				
Operation	Max. 3000 m (depends on the component) [7]			
Mechanical characteristics				
Weight	Approx. 450 g			

Table 67: 5PC901.TS77-07, 5PC901.TS77-08, 5PC901.TS77-09, 5PC901.TS77-10 - Technical data

1) At 50°C, 8.5 µA of the supplied components and a self-discharge of 40%. If an SRAM interface option has been installed, the service life is 2½ years.
2) Yes, although applies only if all components installed within the complete system have this certification
3) At max. specified ambient temperature: Typ. 58 ppm (5 seconds) - worst-case 220 ppm (19 seconds).
4) Maintenance Controller Extended.

5) The super speed transfer rate (5 Gbit/s) is only possible with USB 3.0.
6) This UPS module can only be operated in the IF option 1 slot.
7) The maximum ambient temperature is typically derated by 1°C per 1000 meters (starting at 500 meters above sea level).

3.4 System units

3.4.1 5PC911.SX00-00

3.4.1.1 General information

The active Panel PC 900 system unit consists of a housing and heat sink. A fan kit is also required for operation. A CPU board, main memory, IF options, fan kit and slide-in compact drive are installed in the system unit.

The 5AC902.FA00-00 fan kit is not included in the delivery of the system unit and must be ordered separately.

3.4.1.2 Order data

Model number	Short description	Figure
	System units	
5PC911.SX00-00	PPC900 active system unit	
	Required accessories	
	CPU boards	
5PC901.TS77-00	CPU board Intel Core i7 3615QE 2.3 GHz - Quad core - QM77 chipset - For Panel PC 900	
5PC901.TS77-01	CPU board Intel Core i7 3612QE 2.1 GHz - Quad core - QM77 chipset - For Panel PC 900	
5PC901.TS77-02	CPU board Intel Core i7 3555LE 2.5 GHz - Dual core - QM77 chipset - For Panel PC 900	
5PC901.TS77-03	CPU board Intel Core i7 3517UE 1.7 GHz - Dual core - QM77 chipset - For Panel PC 900	
5PC901.TS77-04	CPU board Intel Core i5 3610ME 2.7 GHz - Dual core - QM77 chipset - For Panel PC 900	
5PC901.TS77-05	CPU board Intel Core i3 3120ME 2.4 GHz - Dual core - QM77 chipset - For Panel PC 900	
5PC901.TS77-06	CPU board Intel Core i3 3217UE 1.6 GHz - Dual core - QM77 chipset - For Panel PC 900	
5PC901.TS77-07	CPU board Intel Celeron 847E 1.1 GHz - Dual core - HM76 chipset - For Panel PC 900	
5PC901.TS77-08	CPU board Intel Celeron 827E 1.4 GHz - Single core - HM76 chipset - For Panel PC 900	
5PC901.TS77-09	CPU board Intel Celeron 1020E 2.2 GHz - Dual core - HM76 chipset - For Panel PC 900	
5PC901.TS77-10	CPU board Intel Celeron 1047UE 1.4 GHz - Dual core - HM76 chipset - For Panel PC 900	
	Fan kit	
5AC902.FA00-00	PPC900 fan kit - For 5PC911.SX00-00	

Table 68: 5PC911.SX00-00 - Order data

3.4.1.3 Technical data

Product ID	5PC911.SX00-00
General information	
Cooling	Active via fan kit Passive via heat sink
Certification CE cULus GOST-R	 Yes Yes Yes
Mechanical characteristics	
Housing Material Paint	 Aluminum, Light metal die casting Anthracite
Dimensions Width Height Depth	 225 mm 226 mm 54 mm
Weight	Approx. 3020 g

Table 69: 5PC911.SX00-00 - Technical data

3.4.2 5PC911.SX00-01

3.4.2.1 General information

The passive Panel PC 900 system unit consists of a housing and heat sink. A CPU board, main memory, IF options and slide-in compact drive are installed in the system unit.

3.4.2.2 Order data

Model number	Short description	Figure
	System units	
5PC911.SX00-01	PPC900 passive system unit	
	Required accessories	
	CPU boards	
5PC901.TS77-01	CPU board Intel Core i7 3612QE 2.1 GHz - Quad core - QM77 chipset - For Panel PC 900	
5PC901.TS77-02	CPU board Intel Core i7 3555LE 2.5 GHz - Dual core - QM77 chipset - For Panel PC 900	
5PC901.TS77-03	CPU board Intel Core i7 3517UE 1.7 GHz - Dual core - QM77 chipset - For Panel PC 900	
5PC901.TS77-04	CPU board Intel Core i5 3610ME 2.7 GHz - Dual core - QM77 chipset - For Panel PC 900	
5PC901.TS77-05	CPU board Intel Core i3 3120ME 2.4 GHz - Dual core - QM77 chipset - For Panel PC 900	
5PC901.TS77-06	CPU board Intel Core i3 3217UE 1.6 GHz - Dual core - QM77 chipset - For Panel PC 900	
5PC901.TS77-07	CPU board Intel Celeron 847E 1.1 GHz - Dual core - HM76 chipset - For Panel PC 900	
5PC901.TS77-08	CPU board Intel Celeron 827E 1.4 GHz - Single core - HM76 chipset - For Panel PC 900	
5PC901.TS77-09	CPU board Intel Celeron 1020E 2.2 GHz - Dual core - HM76 chipset - For Panel PC 900	
5PC901.TS77-10	CPU board Intel Celeron 1047UE 1.4 GHz - Dual core - HM76 chipset - For Panel PC 900	

Table 70: 5PC911.SX00-01 - Order data

3.4.2.3 Technical data

Product ID	5PC911.SX00-01
General information	
Cooling	Passive via heat sink
Certification	
CE	Yes
cULus	Yes
GOST-R	Yes
Mechanical characteristics	
Housing	
Material	Aluminum, Light metal die casting
Paint	Anthracite
Dimensions	
Width	225 mm
Height	226 mm
Depth	54 mm
Weight	Approx. 3020 g

Table 71: 5PC911.SX00-01 - Technical data

3.5 Main memory

3.5.1 5MMDDR.xxxx-03

3.5.1.1 General information

These 204-pin DDR3 main memory modules operate at 1600 MHz and range in size from 1 GB to 8 GB.

If two RAM modules with the same size (e.g. 2 GB) are inserted into the CPU board, then dual-channel memory technology is supported. This technology is not supported if two RAM modules of different sizes (e.g. 2 GB and 4 GB) are inserted.

If two 2 GB modules or one 4 GB module is installed on a 32-bit operating system, only 3 GB of main memory can be used. On a 64-bit operating system, up to 16 GB of main memory can be used.

3.5.1.2 Order data

Model number	Short description	Figure
	Main memory	
5MMDDR.1024-03	SO-DIMM DDR3, 1024 MB	
5MMDDR.2048-03	SO-DIMM DDR3, 2048 MB	
5MMDDR.4096-03	SO-DIMM DDR3, 4096 MB	
5MMDDR.8192-03	SO-DIMM DDR3, 8192 MB	

Table 72: 5MMDDR.1024-03, 5MMDDR.2048-03, 5MMDDR.4096-03, 5MMDDR.8192-03 - Order data

3.5.1.3 Technical data

Product ID	5MMDDR.1024-03	5MMDDR.2048-03	5MMDDR.4096-03	5MMDDR.8192-03
General information				
Certification				
CE	Yes			
cULus	Yes			
cULus HazLoc Class 1 Division 2	Yes [1]			
GOST-R	Yes			
GL	Yes [1]			
Controller				
Memory				
Type	SO-DIMM DDR3 SDRAM			
Memory size	1 GB	2 GB	4 GB	8 GB
Construction	204-pin			
Organization	128M x 64-bit	256M x 64-bit	512M x 64-bit	1024M x 64 bits
Speed	DDR3-1600 (PC3-12800)			

Table 73: 5MMDDR.1024-03, 5MMDDR.2048-03, 5MMDDR.4096-03, 5MMDDR.8192-03 - Technical data

1) Yes, although applies only if all components installed within the complete system have this certification

3.6 Bus units

> **Information:**
>
> **For information about installing or replacing a bus unit, please refer to the section "Installing the bus unit" on page 146.**
>
> **When installing or replacing a bus unit, it is also necessary to load the BIOS Setup defaults (see "Save & Exit" on page 221).**

3.6.1 5AC902.BX0x-xx

3.6.1.1 General information

Bus units consist of a housing and bus. They can be expanded on the Panel PC 900 system unit.

Variants with PCI and PCIe slots are available, and every bus unit has a slide-in drive slot and fan kit.

The fan kit is not included in the delivery of the bus unit and must be ordered separately. If an active system unit (5PC911.SX00-00) is being used, then a fan kit must be configured in the bus unit.

1-slot bus units

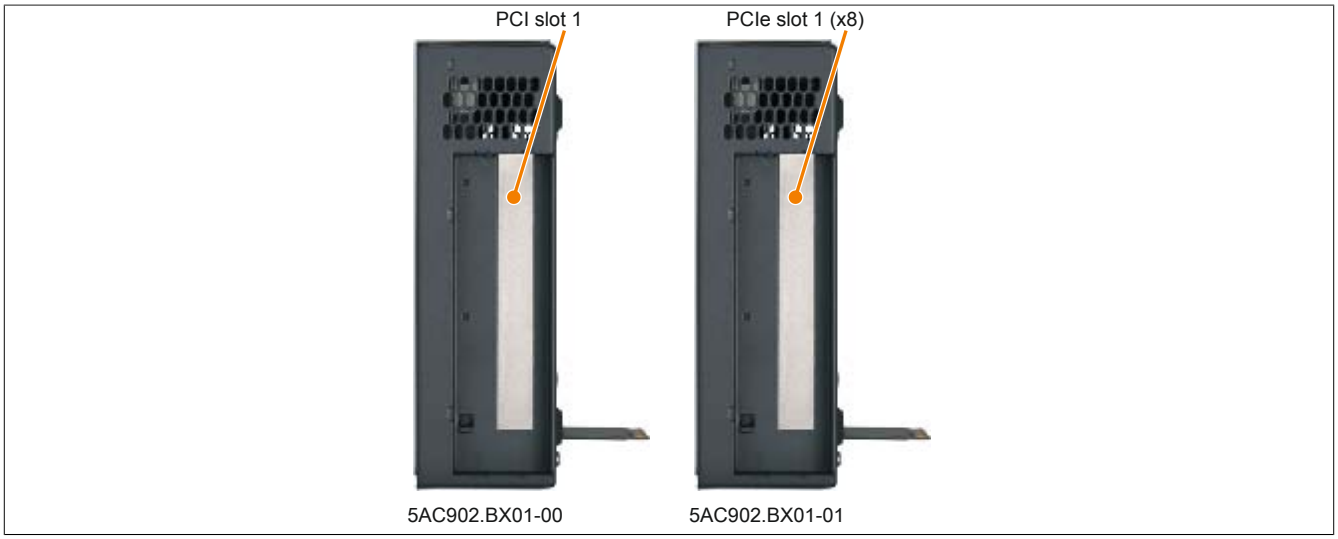

Figure 32: 1-slot bus units

2-slot bus units

Figure 33: 2-slot bus units

Information:

Bus unit 5AC902.BX02-02 is supported beginning with firmware version V1.14. Additional information about firmware upgrades can be found here: "Firmware upgrade" on page 233.

3.6.1.2 Order data

Model number	Short description	Figure
	Bus units	
5AC902.BX01-00	PPC900 bus unit, 1-slot - 1 PCI - 1 slide-in	
5AC902.BX01-01	PPC900 bus unit, 1-slot - 1 PCI Express x8 - 1 slide-in	
5AC902.BX02-00	PPC900 bus unit, 2-slot - 2 PCI - 1 slide-in	
5AC902.BX02-01	PPC900 2-slot bus unit - 1 PCI - 1 PCI Express x8 - 1 slide-in	
5AC902.BX02-02	PPC900 bus unit, 2-slot - 2 PCI Express x4 - 1 slide-in	
	Optional accessories	
	Fan kit	
5AC902.FA0X-00	PPC900 fan kit - For PPC900 bus unit	

Table 74: 5AC902.BX01-00, 5AC902.BX01-01, 5AC902.BX02-00, 5AC902.BX02-01, 5AC902.BX02-02 - Order data

3.6.1.3 Technical data

Product ID	5AC902.BX01-00	5AC902.BX01-01	5AC902.BX02-00	5AC902.BX02-01	5AC902.BX02-02
General information					
Certification					
CE			Yes		
cULus			Yes		
cULus HazLoc Class 1 Division 2			Yes [1]		
GOST-R	Yes	Yes	Yes	Yes	-
Inserts					
PCI slots					
Quantity	1	-	2	1	-
Type	32-bit	-	32-bit	32-bit	-
Design	PCI half-size	-	PCI half-size	PCI half-size	-
Standard	2.2	-	2.2	2.2	-
Bus speed	33 MHz	-	33 MHz	33 MHz	-
PCIe to PCI bridge	Yes	-	Yes	Yes	-
PCIe slots					
Quantity	-	1	-	1	2
Design	-	PCIe half-size	-	PCIe half-size	PCIe half-size
Standard	-	2.0	-	2.0	2.0
Bus speed	-	x8 (4 GB/s)	-	x8 (4 GB/s)	x4 (2 GB/s)
Slide-in drives			1		
Mechanical characteristics					
Dimensions					
Width			164 mm		
Height			218 mm		
Depth	54.7 mm	54.7 mm	75 mm	75 mm	75 mm
Weight	Approx. 1020 g	Approx. 1020 g	Approx. 1220 g	Approx. 1220 g	Approx. 1220 g

Table 75: 5AC902.BX01-00, 5AC902.BX01-01, 5AC902.BX02-00, 5AC902.BX02-01, 5AC902.BX02-02 - Technical data

1) Yes, although applies only if all components installed within the complete system have this certification

Information:

By default, PCIe slots are limited to Gen1 in BIOS. However, this PCIe Gen setting can be changed in BIOS (Advanced - PCI Express configuration - PCI Express GEN 2 settings).

3.7 Fan kit

Information:

Fan kits are subject to wear and must be checked with appropriate frequency and cleaned or replaced when not functioning properly (e.g. due to dirt and grime). For information about replacing fan filters, please refer to the section "Replacing the fan filter" on page 145.

Information:

For information about installing or replacing a fan kit, please refer to the section "Replacing the fan kit" on page 144.

3.7.1 5AC902.FA00-00

3.7.1.1 General information

This fan kit includes 2 fans that are installed in order to improve heat dissipation on the active 5PC911.SX00-00 PPC900 system unit.

- 2 fans for improved heat dissipation on the system unit
- Simple mounting and removal

The 5AC902.FA00-00 fan kit is not included in the delivery of the system unit and must be ordered separately.

3.7.1.2 Order data

Model number	Short description	Figure
	Fan kit	
5AC902.FA00-00	PPC900 fan kit - For 5PC911.SX00-00	
	Optional accessories	
	Accessories	
5AC902.FI00-00	PPC900 filter kit for system unit	

Table 76: 5AC902.FA00-00 - Order data

3.7.1.3 Technical data

Product ID	5AC902.FA00-00
General information	
Number of fans	2
Speed	Max. 9500 ±10% rpm
Noise level	40.2 dB(A) [1]
Service life	70,000 hours at 40°C
Certification	
CE	Yes
cULus	Yes
cULus HazLoc Class 1 Division 2	Yes [2]
GOST-R	Yes
Mechanical characteristics	
Weight	Approx. 70 g

Table 77: 5AC902.FA00-00 - Technical data

1) At maximum fan speed
2) Yes, although applies only if all components installed within the complete system have this certification

3.7.2 5AC902.FA0X-00

3.7.2.1 General information

This fan kit includes a fan that is installed in order to improve heat dissipation on a PPC900 bus unit.

- 1 fan for improved heat dissipation on the bus unit
- Simple mounting and removal

The fan kit is not included in the delivery of the bus unit and must be ordered separately. If an active system unit (5PC911.SX00-00) is being used, then a fan kit must be configured in the bus unit.

3.7.2.2 Order data

Model number	Short description	Figure
	Fan kit	Image not found for 5AC902.FA0X-00!
5AC902.FA0X-00	PPC900 fan kit - For PPC900 bus unit	
	Optional accessories	
	Accessories	
5AC902.FI0X-00	PPC900 filter kit for bus unit	

Table 78: 5AC902.FA0X-00 - Order data

3.7.2.3 Technical data

Product ID	5AC902.FA0X-00
General information	
Number of fans	1
Speed	Max. 9500 ±10% rpm
Noise level	40.2 dB(A) [1]
Service life	70,000 hours at 40°C
Certification	
CE	Yes
cULus	Yes
cULus HazLoc Class 1 Division 2	Yes [2]
GOST-R	Yes
Mechanical characteristics	
Weight	Approx. 36 g

Table 79: 5AC902.FA0X-00 - Technical data

1) At maximum fan speed
2) Yes, although applies only if all components installed within the complete system have this certification

3.8 Drives

3.8.1 5AC901.CHDD-01

3.8.1.1 General information

This 500 GB slide-in compact hard disk is specified for 24-hour operation and can be used in APC910 and PPC900 system units.

- 500 GB hard disk
- Slide-in compact
- Specified for 24-hour operation
- S.M.A.R.T. support

3.8.1.2 Order data

Model number	Short description	Figure
	Drives	
5AC901.CHDD-01	500 GB SATA hard disk, slide-in compact, 24/7 operation Note: please see the manual for information about using this hard disk	
	Optional accessories	
	Drives	
5MMHDD.0500-00	500 GB SATA hard disk; replacement for 5AC801.HDDI-04, 5AC901.CHDD-01 and 5ACPCI.RAIC-06; note: please see the manual for information about using this hard disk	

Table 80: 5AC901.CHDD-01 - Order data

3.8.1.3 Technical data

Information:

The following characteristics, features and limit values only apply to this accessory and can deviate from those specified for the complete system. The data specifications for the complete system take precedence over those of individual components.

Product ID	5AC901.CHDD-01
General information	
Certification	
CE	Yes
cULus	Yes
cULus HazLoc Class 1 Division 2	Yes [1]
GOST-R	Yes
Hard disk drive	
Capacity	500 GB
Number of heads	2
Number of sectors	976,773,168
Bytes per sector	512 (logical) / 4096 (physical)
Cache	16 MB
Speed	5400 rpm ±0.2%
Startup time	Typ. 3.5 s (from 0 rpm to read access)
Service life	5 years
MTBF	1,000,000 POH [2]
S.M.A.R.T. support	Yes
Interface	SATA
Access time	5.5 ms
Supported transfer modes	SATA II
Data transfer rate	
Internal	Max. 147 MB/s
To/From host	Max. 150 MB/s (SATA I), max. 300 MB/s (SATA II)
Positioning time	
Nominal (read only)	11 ms
Maximum (read only)	21 ms
Environmental conditions	
Temperature [3]	
Operation [4]	0 to 60°C
24-hour operation [5]	0 to 60°C
Storage	-40 to 70°C
Transport	-40 to 70°C

Table 81: 5AC901.CHDD-01 - Technical data

Product ID	5AC901.CHDD-01
Relative humidity [6]	
Operation	5 to 95%, non-condensing
Storage	5 to 95%, non-condensing
Transport	5 to 95%, non-condensing
Vibration	
Operation (continuous)	5 to 500 Hz: 0.25 g; no unrecoverable errors
Operation (occasional)	5 to 500 Hz: 0.5 g; no unrecoverable errors
Storage	10 to 500 Hz: 5 g; no unrecoverable errors
Transport	10 to 500 Hz: 5 g; no unrecoverable errors
Shock	
Operation	400 g and 2 ms duration; no unrecoverable errors
Storage	1000 g and 2 ms duration; no unrecoverable errors
Transport	1000 g and 2 ms duration; no unrecoverable errors
Altitude	
Operation	-305 to 3048 m
Storage	-305 to 12192 m
Mechanical characteristics	
Installation	Fixed [7]
Dimensions	
Width	10 mm
Height	75 mm
Depth	105 mm
Weight	134 g
Manufacturer information	
Manufacturer	Western Digital
Manufacturer's product ID	WD5000LUCT

Table 81: 5AC901.CHDD-01 - Technical data

1) Yes, although applies only if all components installed within the complete system have this certification
2) With 8760 POH (power-on hours) per year and 25°C surface temperature.
3) Temperature values at an elevation of 305 meters. The temperature specification must be reduced linearly by 1°C every 305 meters. The temperature increase and decrease can be a maximum of 20°C per hour.
4) Standard operation refers to 333 POH (power-on hours) per month.
5) 24-hour operation refers to 732 POH (power-on hours) per month.
6) Humidity gradient: Maximum 20% per hour.
7) Slide-in compact installation.

3.8.1.4 Temperature humidity diagram

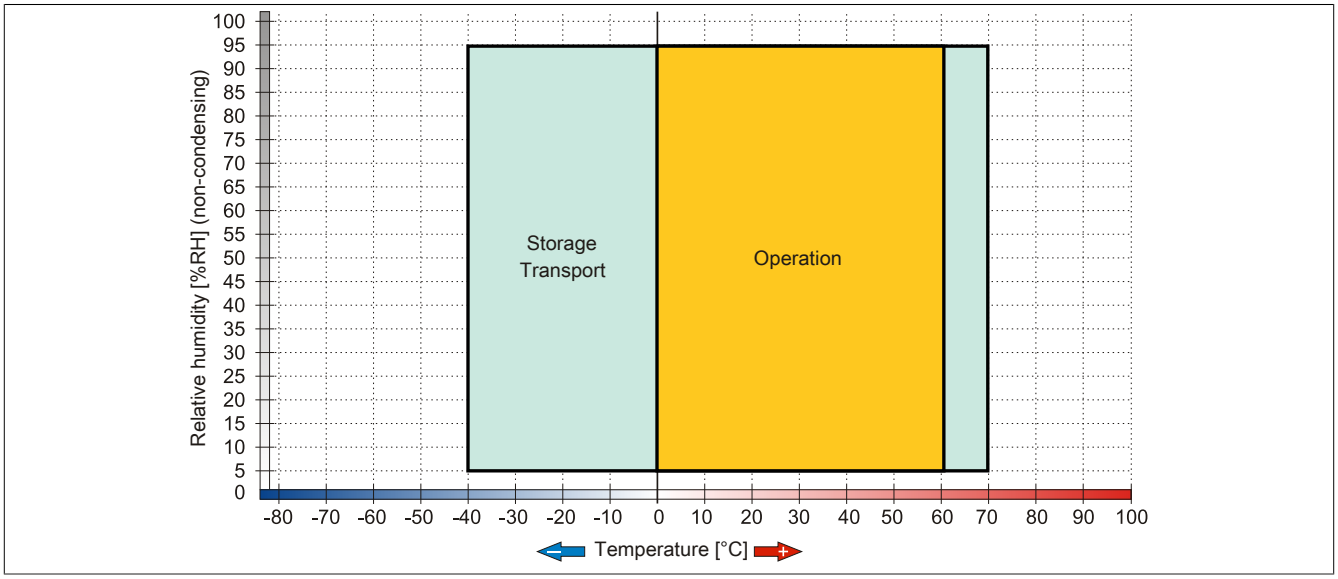

Figure 34: 5AC901.CHDD-01 - Temperature humidity diagram

3.8.2 5AC901.CSSD-03

3.8.2.1 General information

This 60 GB slide-in compact SSD (solid-state drive) is based on MLC (multi-level cell) technology, SATA 3.0 compatible and The slide-in compact drive can be used in APC910 and PPC900 system units.

- 60 GB solid-state drive
- MLC flash
- S.M.A.R.T. support
- Slide-in compact
- SATA 3.0 compatible

3.8.2.2 Order data

Model number	Short description	Figure
	Drives	
5AC901.CSSD-03	60 GB SATA slide-in compact SSD (MLC)	
	Optional accessories	
	Drives	
5MMSSD.0060-01	60 GB SATA SSD (MLC); replacement for 5AC801.SSDI-03 and 5AC901.CSSD-03; SSD for 5PP5IO.GMAC-00; note: please see the manual for information about using this SSD	

Table 82: 5AC901.CSSD-03 - Order data

3.8.2.3 Technical data

Caution!

A sudden loss of power may result in data loss! In very rare cases, the mass storage device may also become damaged.

To prevent damage and loss of data, the use of a UPS device is recommended.

Information:

The following characteristics, features and limit values only apply to this accessory and can deviate from those specified for the complete system. The data specifications for the complete system take precedence over those of individual components.

Product ID	5AC901.CSSD-03	
Revision	**C0**	**D0**
General information		
Certification		
CE	Yes	
cULus	Yes	
cULus HazLoc Class 1 Division 2	Yes [1]	
GOST-R	Yes	
Solid state drive		
Capacity	60 GB	
Data reliability	< 1 unrecoverable error in 10^{15} bit read accesses	
MTBF	1,500,000 hours	
S.M.A.R.T. support	Yes	
Interface	SATA	
Maintenance	None	
Sequential read	Max. 510 MB/s	
Sequential write	Max. 430 MB/s	
IOPS [2]		
4k read	Max. 50,000 (random)	
4k write	Max. 25,000 (random)	
Endurance		
MLC flash	Yes	
Guaranteed data volume		
Guaranteed	35 TBW [3]	
Compatibility	SATA 3.0 compliant ACS-2 SSD Enhanced SMART ATA feature set Native Command Queuing (NCQ)	

Table 83: 5AC901.CSSD-03, 5AC901.CSSD-03 - Technical data

Product ID	5AC901.CSSD-03	
Environmental conditions		
Temperature		
Operation	0 to 70°C	-30 to 85°C
Storage	-40 to 85°C	
Transport	-40 to 85°C	
Relative humidity		
Operation	8 to 90%, non-condensing	5 to 90%, non-condensing
Storage	8 to 95%, non-condensing	5 to 95%, non-condensing
Transport	8 to 95%, non-condensing	5 to 95%, non-condensing
Vibration		
Operation	10 to 2000 Hz: 20 g	
Storage	10 to 2000 Hz: 20 g	
Transport	10 to 2000 Hz: 20 g	
Shock		
Operation	1500 g, 0.5 ms	
Storage	1500 g, 0.5 ms	
Transport	1500 g, 0.5 ms	
Altitude		
Operation	-300 to 12192 m	
Storage	-300 to 12192 m	
Transport	-300 to 12192 m	
Mechanical characteristics		
Installation	Fixed [4]	
Dimensions		
Width	13 mm	
Height	98 mm	
Depth	105 mm	
Weight	118 g	
Manufacturer information		
Manufacturer	Toshiba	
Manufacturer's product ID	THNSNH060GBST	THNSNJ060WCST

Table 83: 5AC901.CSSD-03, 5AC901.CSSD-03 - Technical data

1) Yes, although applies only if all components installed within the complete system have this certification
2) IOPS: Random read and write input/output operations per second.
3) TBW: Terabyte written
4) Slide-in compact installation.

3.8.2.4 Temperature humidity diagram

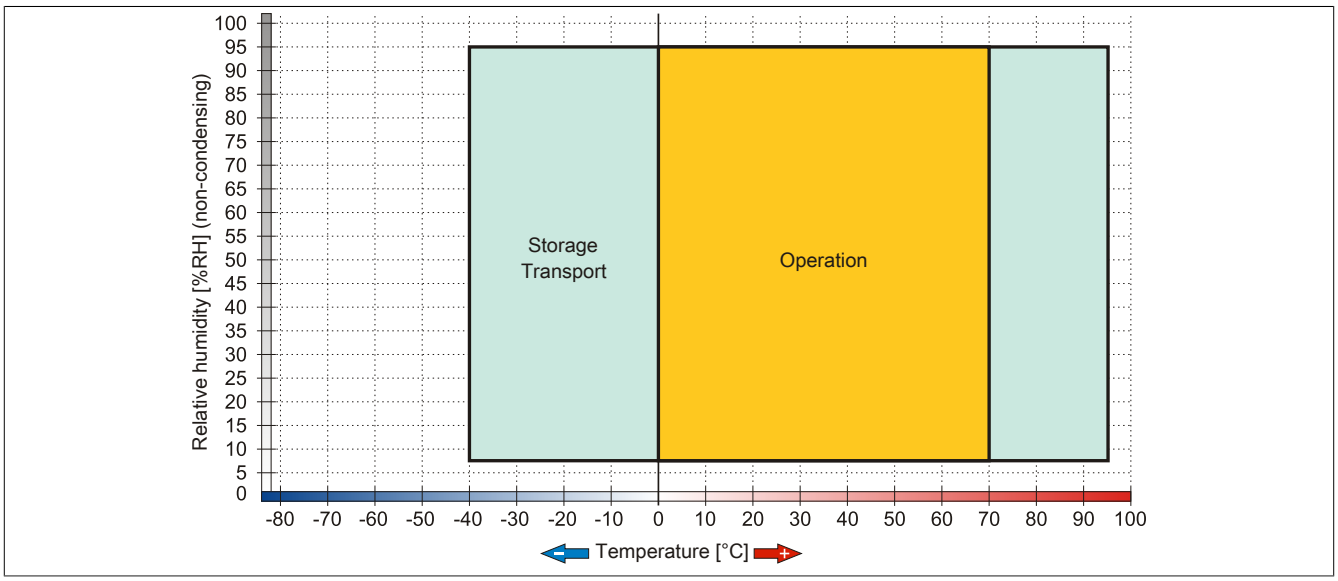

Figure 35: 5AC901.CSSD-03 ≤ Rev. C0 - Temperature/Humidity diagram

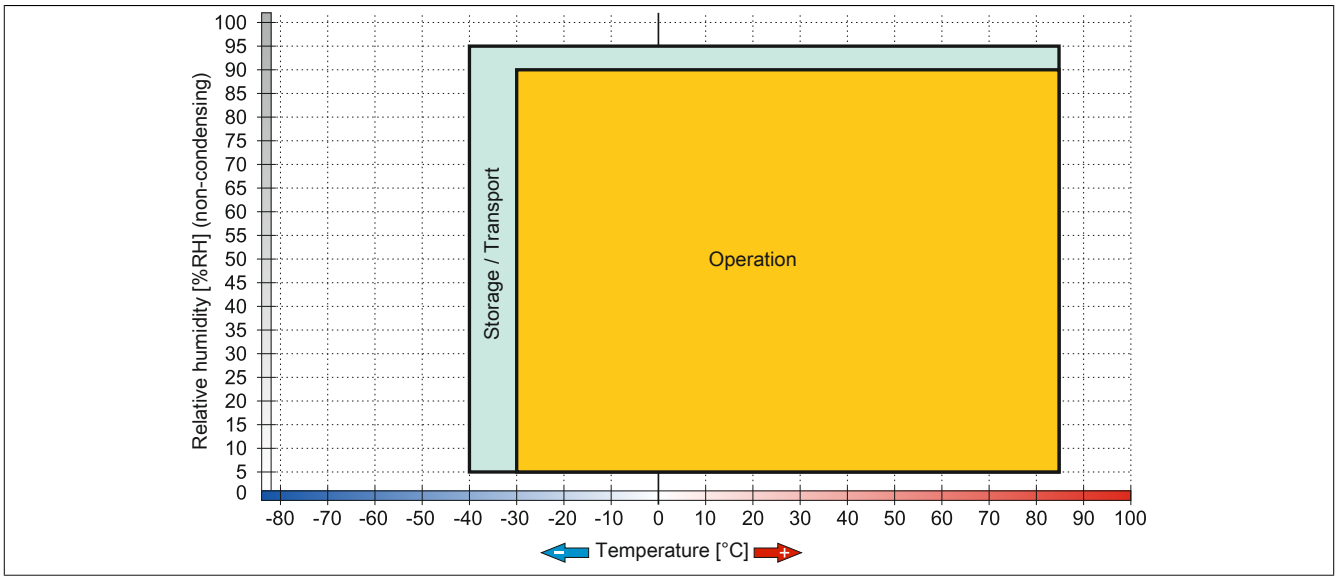

Figure 36: 5AC901.CSSD-03 ≥ Rev. D0 - Temperature/Humidity diagram

3.8.3 5AC901.CSSD-04

3.8.3.1 General information

This 128 GB slide-in compact SSD (solid-state drive) is based on MLC (multi-level cell) technology, SATA 3.0 compatible and The slide-in compact drive can be used in APC910 and PPC900 system units.

- 128 GB solid-state drive
- MLC flash
- S.M.A.R.T. support
- Slide-in compact
- SATA 3.0 compatible

3.8.3.2 Order data

Model number	Short description	Figure
	Drives	
5AC901.CSSD-04	128 GB SATA SSD (MLC), slide-in compact	
	Optional accessories	
	Drives	
5MMSSD.0128-01	128 GB SATA SSD (MLC); replacement for 5AC801.SSDI-04 and 5AC901.CSSD-04; SSD for 5PP5IO.GMAC-00; note: please see the manual for information about using this SSD	

Table 84: 5AC901.CSSD-04 - Order data

3.8.3.3 Technical data

Caution!

A sudden loss of power may result in data loss! In very rare cases, the mass storage device may also become damaged.

To prevent damage and loss of data, the use of a UPS device is recommended.

Information:

The following characteristics, features and limit values only apply to this accessory and can deviate from those specified for the complete system. The data specifications for the complete system take precedence over those of individual components.

Product ID	5AC901.CSSD-04		
Revision	**C0**	**D0**	**E0**
General information			
Certification			
CE	Yes		
cULus	Yes		
cULus HazLoc Class 1 Division 2	Yes [1]		
GOST-R	Yes		
Solid state drive			
Capacity	128 GB		
Data reliability	< 1 unrecoverable error in 10^{15} bit read accesses		
MTBF	1,500,000 hours		
S.M.A.R.T. support	Yes		
Interface	SATA		
Maintenance	None		
Sequential read	Max. 510 MB/s		
Sequential write	Max. 450 MB/s		
IOPS [2]			
4k read	Max. 80,000 (random)	Max. 85,000 (random)	
4k write	Max. 35,000 (random)		
Endurance			
MLC flash	Yes		
Guaranteed data volume			
Guaranteed	74 TBW [3]		
Compatibility	SATA 3.0 compliant ACS-2 SSD Enhanced SMART ATA feature set Native Command Queuing (NCQ)		

Table 85: 5AC901.CSSD-04, 5AC901.CSSD-04, 5AC901.CSSD-04 - Technical data

Product ID	5AC901.CSSD-04		
Environmental conditions			
Temperature			
Operation	0 to 70°C	-30 to 85°C	
Storage	-40 to 85°C		
Transport	-40 to 85°C		
Relative humidity			
Operation	8 to 90%, non-condensing	5 to 90%, non-condensing	
Storage	8 to 95%, non-condensing	5 to 95%, non-condensing	
Transport	8 to 95%, non-condensing	5 to 95%, non-condensing	
Vibration			
Operation	10 to 2000 Hz: 20 g		
Storage	10 to 2000 Hz: 20 g		
Transport	10 to 2000 Hz: 20 g		
Shock			
Operation	1500 g, 0.5 ms		
Storage	1500 g, 0.5 ms		
Transport	1500 g, 0.5 ms		
Altitude			
Operation	-300 to 12192 m		
Storage	-300 to 12192 m		
Transport	-300 to 12192 m		
Mechanical characteristics			
Installation	Fixed [4]		
Dimensions			
Width	13 mm		
Height	98 mm		
Depth	105 mm		
Weight	118 g		
Manufacturer information			
Manufacturer	Toshiba		
Manufacturer's product ID	THNSNH128GBST	THNSNJ128WBST	THNSNJ128WCST

Table 85: 5AC901.CSSD-04, 5AC901.CSSD-04, 5AC901.CSSD-04 - Technical data

1) Yes, although applies only if all components installed within the complete system have this certification
2) IOPS: Random read and write input/output operations per second.
3) TBW: Terabyte written
4) Slide-in compact installation.

3.8.3.4 Temperature humidity diagram

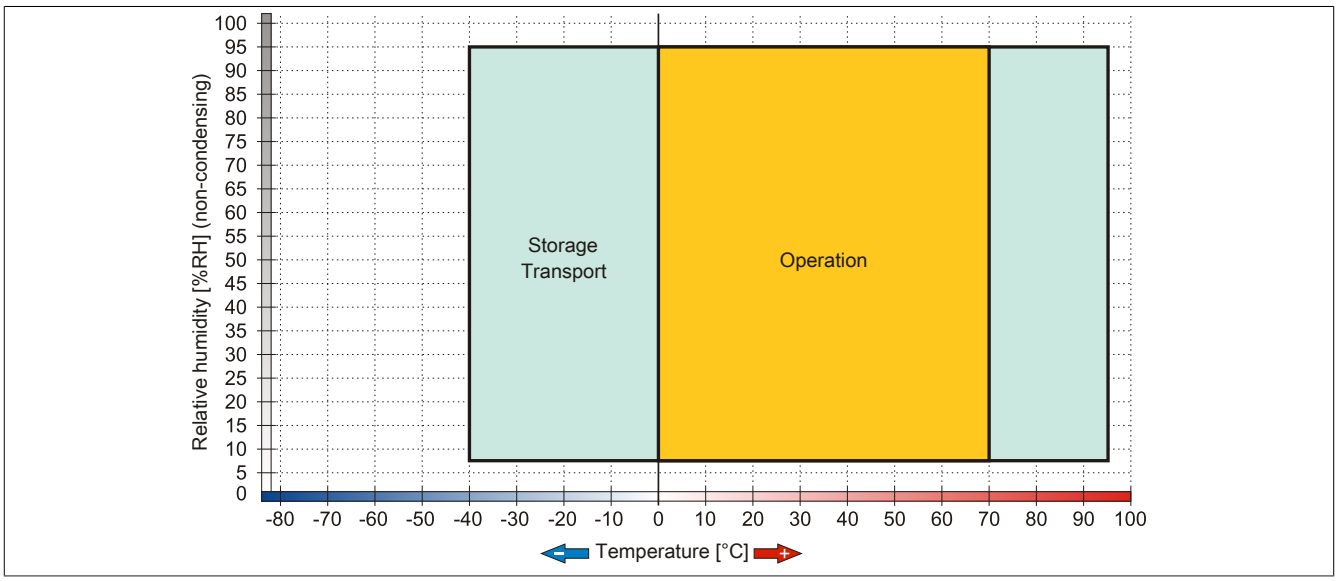

Figure 37: 5AC901.CSSD-04 ≤ Rev. C0 - Temperature/Humidity diagram

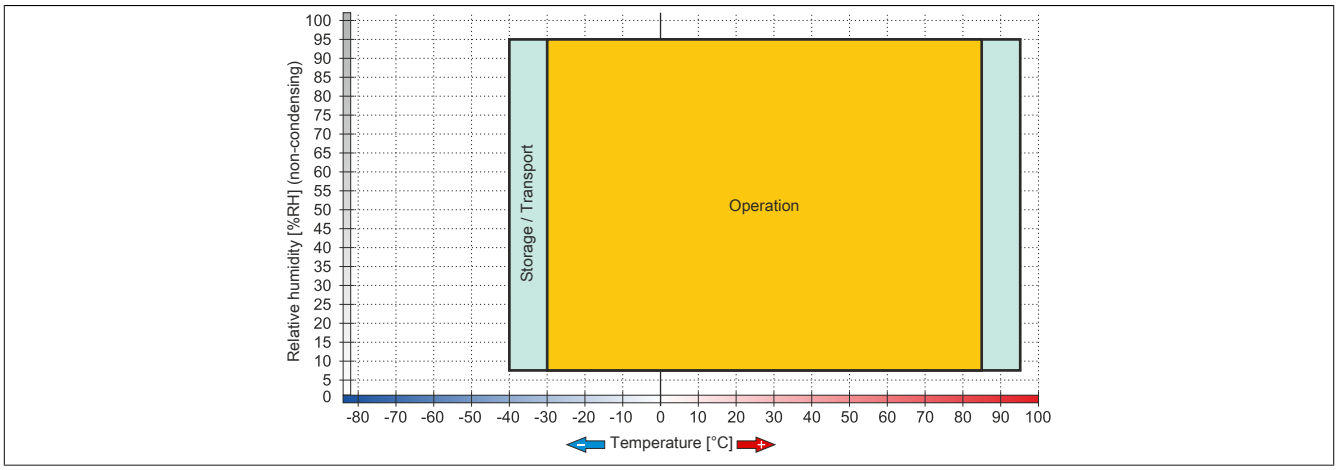

Figure 38: 5AC901.CSSD-04 ≥ Rev. D0 - Temperature/Humidity diagram

3.8.4 5AC901.CSSD-05

3.8.4.1 General information

This 256 GB slide-in compact SSD (solid-state drive) is based on MLC (multi-level cell) technology and is SATA 3.0 compatible. The slide-in compact drive can be used in APC910 and PPC900 system units.

- 256 GB solid state drive
- MLC flash
- S.M.A.R.T. support
- Slide-in compact
- SATA 3.0 compatible

3.8.4.2 Order data

Model number	Short description	Figure
	Drives	
5AC901.CSSD-05	256 GB SSD MLC - Slide-in compact - Toshiba - SATA	
	Optional accessories	
	Drives	
5MMSSD.0256-00	256 GB SSD MLC - Slide-in compact - Toshiba - SATA	

Table 86: 5AC901.CSSD-05 - Order data

3.8.4.3 Technical data

Caution!

A sudden loss of power may result in data loss! In very rare cases, the mass storage device may also become damaged.

To prevent damage and loss of data, the use of a UPS device is recommended.

Information:

The following characteristics, features and limit values only apply to this accessory and can deviate from those specified for the complete system. The data specifications for the complete system take precedence over those of individual components.

Product ID	5AC901.CSSD-05
General information	
Certification	
CE	Yes
cULus	Yes
cULus HazLoc Class 1 Division 2	Yes [1]
GOST-R	Yes
Solid state drive	
Capacity	256 GB
Data reliability	< 1 unrecoverable error in 10^{15} bit read accesses
MTBF	1,500,000 hours
S.M.A.R.T. support	Yes
Interface	SATA
Maintenance	None
Sequential read	Max. 510 MB/s
Sequential write	Max. 460 MB/s
IOPS [2]	
4k read	Max. 90,000 (random)
4k write	Max. 35,000 (random)
Endurance	
MLC flash	Yes
Guaranteed data volume	
Guaranteed	148 TBW [3]
Compatibility	SATA 3.0 compliant ACS-2 SSD Enhanced SMART ATA feature set Native Command Queuing (NCQ)

Table 87: 5AC901.CSSD-05 - Technical data

Product ID	5AC901.CSSD-05
Environmental conditions	
Temperature	
Operation	-30 to 85°C
Storage	-40 to 85°C
Transport	-40 to 85°C
Relative humidity	
Operation	5 to 90%, non-condensing
Storage	5 to 95%, non-condensing
Transport	5 to 95%, non-condensing
Vibration	
Operation	10 to 2000 Hz: 20 g
Storage	10 to 2000 Hz: 20 g
Transport	10 to 2000 Hz: 20 g
Shock	
Operation	1500 g, 0.5 ms
Storage	1500 g, 0.5 ms
Transport	1500 g, 0.5 ms
Altitude	
Operation	-300 to 12192 m
Storage	-300 to 12192 m
Transport	-300 to 12192 m
Mechanical characteristics	
Installation	Fixed [4]
Dimensions	
Width	13 mm
Height	98 mm
Depth	105 mm
Weight	118 g
Manufacturer information	
Manufacturer	Toshiba
Manufacturer's product ID	THNSNJ256WCST

Table 87: 5AC901.CSSD-05 - Technical data

1) Yes, although applies only if all components installed within the complete system have this certification
2) IOPS: Random read and write input/output operations per second.
3) TBW: Terabyte written
4) Slide-in compact installation.

3.8.4.4 Temperature humidity diagram

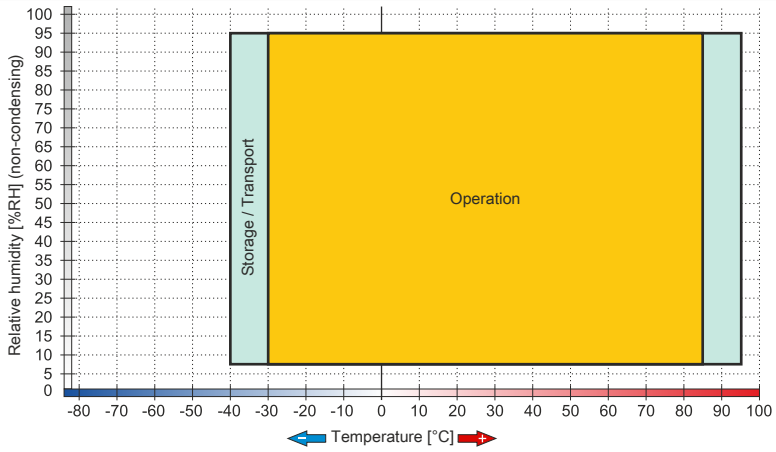

Figure 39: 5AC901.CSSD-05 - Temperature humidity diagram

3.8.5 5MMSSD.0060-01

3.8.5.1 General information

This 60 GB slide-in compact SSD (solid-state drive) is based on multi-level cell (MLC) technology and can be used as a replacement or accessory part.

- Replacement for 5AC801.SSDI-03 or 5AC901.CSSD-03 SSD drives
- Accessory for the APC510 (optional SSD for I/O board)

3.8.5.2 Order data

Model number	Short description	Figure
	Drives	
5MMSSD.0060-01	60 GB SATA SSD (MLC); replacement for 5AC801.SSDI-03 and 5AC901.CSSD-03; SSD for 5PP5IO.GMAC-00; note: please see the manual for information about using this SSD	

Table 88: 5MMSSD.0060-01 - Order data

3.8.5.3 Technical data

Caution!

A sudden loss of power may result in data loss! In very rare cases, the mass storage device may also become damaged.

To prevent damage and loss of data, the use of a UPS device is recommended.

Information:

The following characteristics, features and limit values only apply to this accessory and can deviate from those specified for the complete system. The data specifications for the complete system take precedence over those of individual components.

Product ID	5MMSSD.0060-01	
Revision	**C0**	**D0**
General information		
Certification		
CE	Yes	
cULus	Yes	
cULus HazLoc Class 1 Division 2	Yes [1]	
GOST-R	Yes	
Solid state drive		
Capacity	60 GB	
Data reliability	<1 unrecoverable error in 10^{15} bit read accesses	
MTBF	1,500,000 hours	
S.M.A.R.T. support	Yes	
Interface	SATA	
Maintenance	None	
Sequential read	Max. 510 MB/s	
Sequential write	Max. 430 MB/s	
IOPS [2]		
4k read	Max. 50,000 (random)	
4k write	Max. 25,000 (random)	
Endurance		
MLC flash	Yes	
Guaranteed data volume		
Guaranteed	35 TBW [3]	
Compatibility	SATA 3.0 compliant ACS-2 SSD Enhanced SMART ATA feature set Native Command Queuing (NCQ)	
Environmental conditions		
Temperature		
Operation	0 to 70°C	-30 to 85°C
Storage	-40 to 85°C	
Transport	-40 to 85°C	

Table 89: 5MMSSD.0060-01, 5MMSSD.0060-01 - Technical data

Product ID	5MMSSD.0060-01	
Relative humidity		
Operation	8 to 90%, non-condensing	5 to 90%, non-condensing
Storage	8 to 95%, non-condensing	5 to 95%, non-condensing
Transport	8 to 95%, non-condensing	5 to 95%, non-condensing
Vibration		
Operation	10 to 2000 Hz: 20 g	
Storage	10 to 2000 Hz: 20 g	
Transport	10 to 2000 Hz: 20 g	
Shock		
Operation	1500 g, 0.5 ms	
Storage	1500 g, 0.5 ms	
Transport	1500 g, 0.5 ms	
Altitude		
Operation	-300 to 12192 m	
Storage	-300 to 12192 m	
Transport	-300 to 12192 m	
Mechanical characteristics		
Dimensions		
Width	9.5 mm	
Height	69 mm	
Depth	100 mm	
Weight	78 g	
Manufacturer information		
Manufacturer	Toshiba	
Manufacturer's product ID	THNSNH060GBST	THNSNJ060WCST

Table 89: 5MMSSD.0060-01, 5MMSSD.0060-01 - Technical data

1) Yes, although applies only if all components installed within the complete system have this certification
2) IOPS: Random read and write input/output operations per second.
3) TBW: Terabytes written

3.8.5.4 Temperature humidity diagram

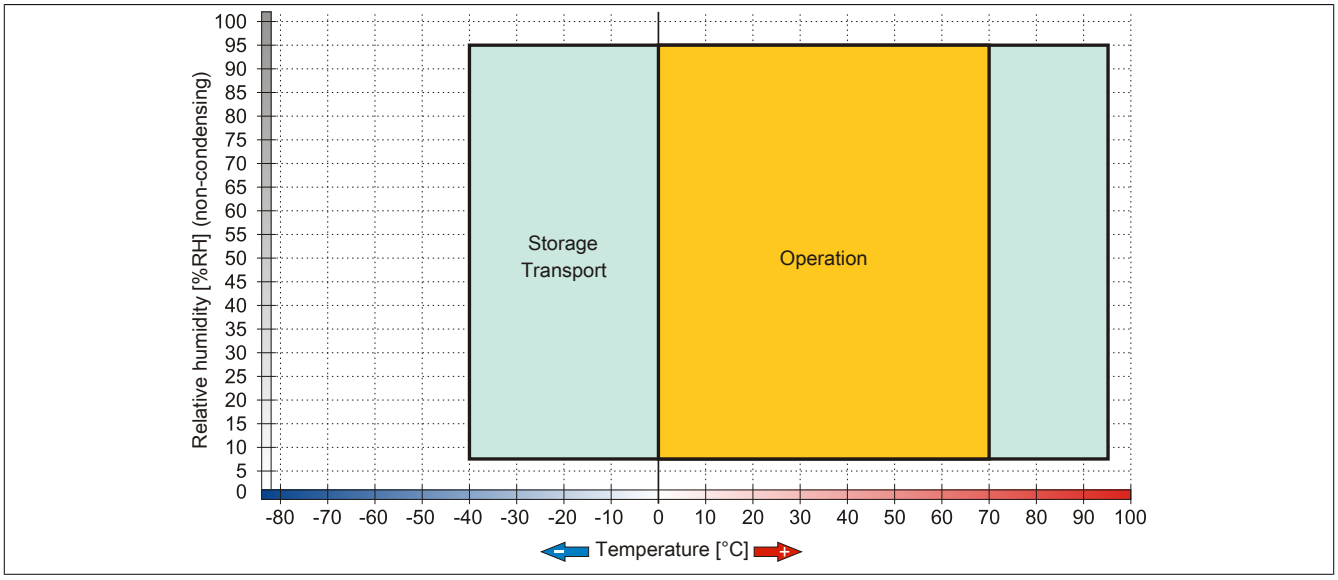

Figure 40: 5MMSSD.0060-01 ≤ Rev. C0 - Temperature/Humidity diagram

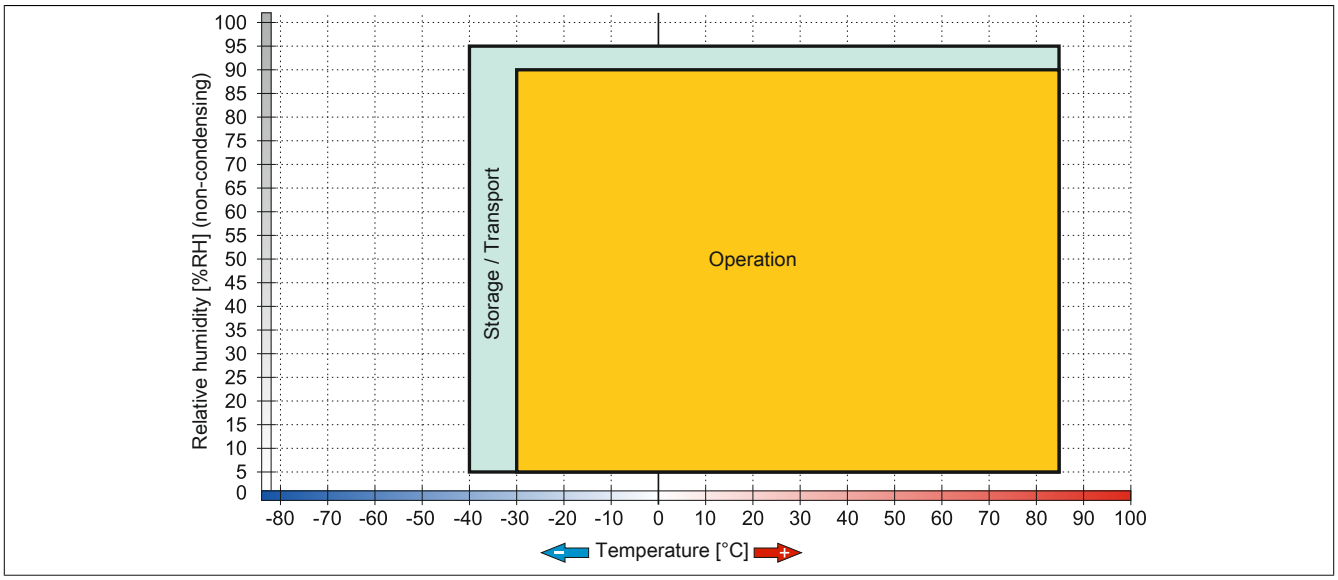

Figure 41: 5MMSSD.0060-01 ≥ Rev. D0 - Temperature/Humidity diagram

3.8.6 5MMSSD.0128-01

3.8.6.1 General information

This 128 GB slide-in compact SSD (solid-state drive) is based on multi-level cell (MLC) technology and can be used as a replacement or accessory part.

- Replacement for 5AC801.SSDI-04 or 5AC901.CSSD-04 SSD drives
- Accessory for the APC510 (optional SSD for I/O board)

3.8.6.2 Order data

Model number	Short description	Figure
	Drives	
5MMSSD.0128-01	128 GB SATA SSD (MLC); replacement for 5AC801.SSDI-04 and 5AC901.CSSD-04; SSD for 5PP5IO.GMAC-00; note: please see the manual for information about using this SSD	

Table 90: 5MMSSD.0128-01 - Order data

3.8.6.3 Technical data

Caution!

A sudden loss of power may result in data loss! In very rare cases, the mass storage device may also become damaged.

To prevent damage and loss of data, the use of a UPS device is recommended.

Information:

The following characteristics, features and limit values only apply to this accessory and can deviate from those specified for the complete system. The data specifications for the complete system take precedence over those of individual components.

Product ID	5MMSSD.0128-01	
Revision	C0	D0
General information		
Certification		
CE	Yes	
cULus	Yes	
cULus HazLoc Class 1 Division 2	Yes [1]	
GOST-R	Yes	
Solid state drive		
Capacity	128 GB	
Data reliability	<1 unrecoverable error in 10^{15} bit read accesses	
MTBF	1,500,000 hours	
S.M.A.R.T. support	Yes	
Interface	SATA	
Maintenance	None	
Sequential read	Max. 510 MB/s	
Sequential write	Max. 450 MB/s	
IOPS [2]		
4k read	Max. 85,000 (random)	
4k write	Max. 35,000 (random)	
Endurance		
MLC flash	Yes	
Guaranteed data volume		
Guaranteed	74 TBW [3]	
Compatibility	SATA 3.0 compliant ACS-2 SSD Enhanced SMART ATA feature set Native Command Queuing (NCQ)	

Table 91: 5MMSSD.0128-01, 5MMSSD.0128-01 - Technical data

Product ID	5MMSSD.0128-01	
Environmental conditions		
Temperature		
Operation	0 to 70°C	-30 to 85°C
Storage	-40 to 85°C	
Transport	-40 to 85°C	
Relative humidity		
Operation	8 to 90%, non-condensing	5 to 90%, non-condensing
Storage	8 to 95%, non-condensing	5 to 95%, non-condensing
Transport	8 to 95%, non-condensing	5 to 95%, non-condensing
Vibration		
Operation	10 to 2000 Hz: 20 g	
Storage	10 to 2000 Hz: 20 g	
Transport	10 to 2000 Hz: 20 g	
Shock		
Operation	1500 g, 0.5 ms	
Storage	1500 g, 0.5 ms	
Transport	1500 g, 0.5 ms	
Altitude		
Operation	-300 to 12192 m	
Storage	-300 to 12192 m	
Transport	-300 to 12192 m	
Mechanical characteristics		
Dimensions		
Width	9.5 mm	7 mm
Height	69 mm	
Depth	100 mm	
Weight	78 g	
Manufacturer information		
Manufacturer	Toshiba	
Manufacturer's product ID	THNSNH128GBST	THNSNJ128WCST

Table 91: 5MMSSD.0128-01, 5MMSSD.0128-01 - Technical data

1) Yes, although applies only if all components installed within the complete system have this certification
2) IOPS: Random read and write input/output operations per second.
3) TBW: Terabytes written

3.8.6.4 Temperature humidity diagram

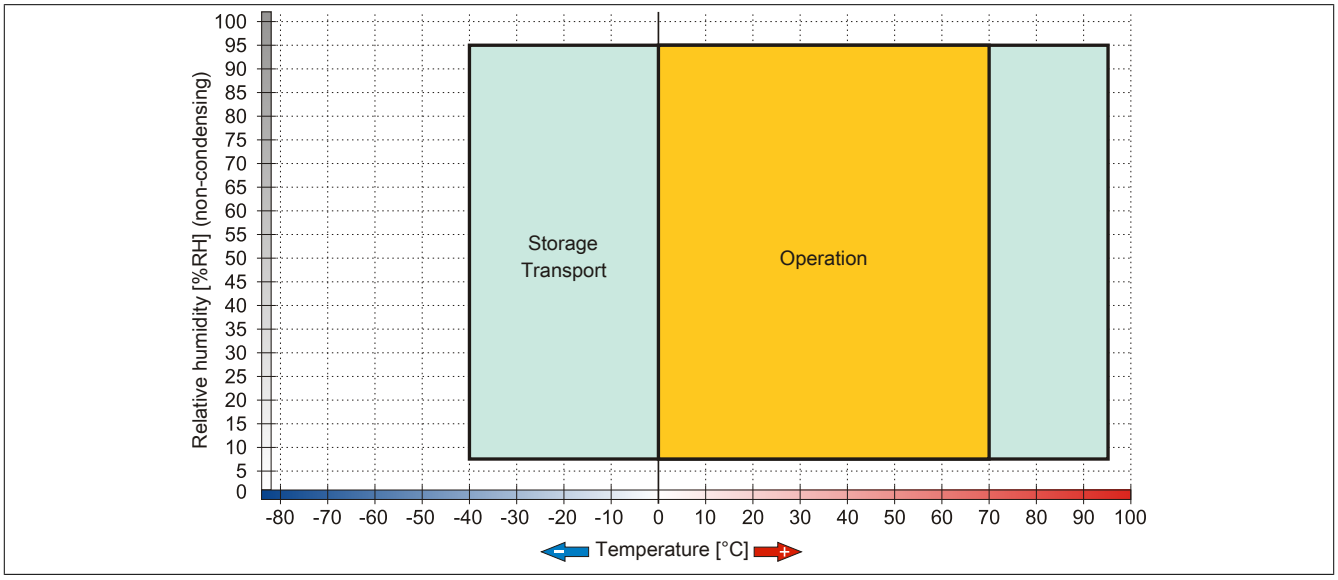

Figure 42: 5MMSSD.0128-01 ≤ Rev. C0 - Temperature/Humidity diagram

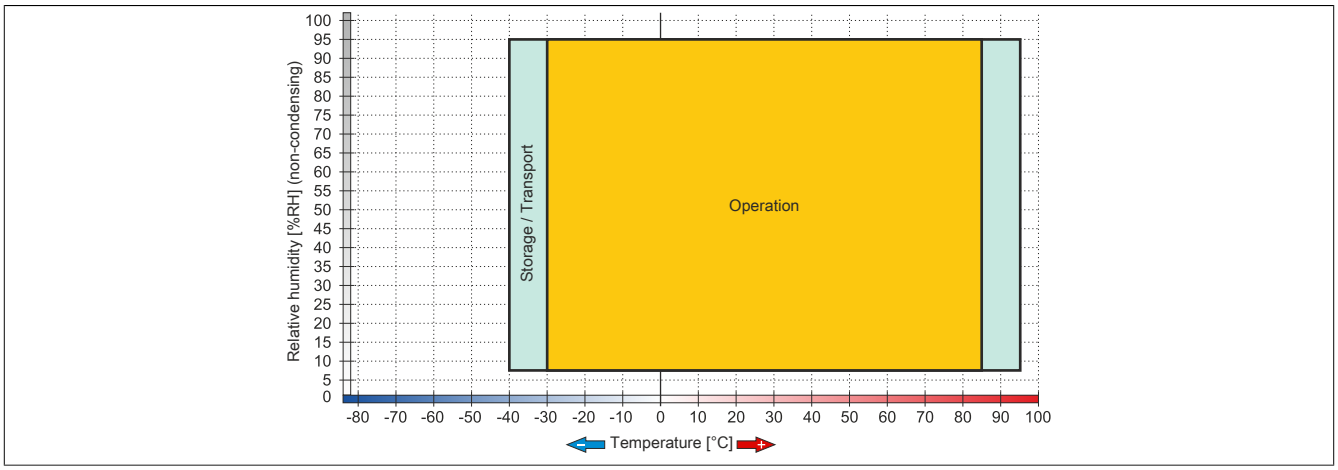

Figure 43: 5MMSSD.0128-01 ≥ Rev. D0 - Temperature/Humidity diagram

3.8.7 5MMSSD.0256-00

3.8.7.1 General information

This 256 GB slide-in compact SSD (solid-state drive) is based on multi-level cell (MLC) technology and can be used as a replacement or accessory part.

- Replacement for 5AC801.SSDI-05 or 5AC901.CSSD-05 SSD drives
- Accessory for the APC510 (optional SSD for I/O board)

3.8.7.2 Order data

Model number	Short description	Figure
	Drives	
5MMSSD.0256-00	256 GB SSD MLC - Slide-in compact - Toshiba - SATA	

Table 92: 5MMSSD.0256-00 - Order data

3.8.7.3 Technical data

Caution!

A sudden loss of power may result in data loss! In very rare cases, the mass storage device may also become damaged.

To prevent damage and loss of data, the use of a UPS device is recommended.

Information:

The following characteristics, features and limit values only apply to this accessory and can deviate from those specified for the complete system. The data specifications for the complete system take precedence over those of individual components.

Product ID	5MMSSD.0256-00
General information	
Certification	
CE	Yes
cULus	Yes
cULus HazLoc Class 1 Division 2	Yes [1]
Solid state drive	
Capacity	256 GB
Data reliability	<1 unrecoverable error in 10^{15} bit read accesses
MTBF	1,500,000 hours
S.M.A.R.T. support	Yes
Interface	SATA
Maintenance	None
Sequential read	Max. 510 MB/s
Sequential write	Max. 460 MB/s
IOPS [2]	
4k read	Max. 90,000 (random)
4k write	Max. 35,000 (random)
Endurance	
MLC flash	Yes
Guaranteed data volume	
Guaranteed	148 TBW [3]
Compatibility	SATA 3.0 compliant ACS-2 SSD Enhanced SMART ATA feature set Native Command Queuing (NCQ)

Table 93: 5MMSSD.0256-00 - Technical data

Product ID	5MMSSD.0256-00
Environmental conditions	
Temperature	
Operation	-30 to 85°C
Storage	-40 to 85°C
Transport	-40 to 85°C
Relative humidity	
Operation	5 to 90%, non-condensing
Storage	5 to 95%, non-condensing
Transport	5 to 95%, non-condensing
Vibration	
Operation	10 to 2000 Hz: 20 g
Storage	10 to 2000 Hz: 20 g
Transport	10 to 2000 Hz: 20 g
Shock	
Operation	1500 g, 0.5 ms
Storage	1500 g, 0.5 ms
Transport	1500 g, 0.5 ms
Altitude	
Operation	-300 to 12192 m
Storage	-300 to 12192 m
Transport	-300 to 12192 m
Mechanical characteristics	
Dimensions	
Width	7 mm
Height	69 mm
Depth	100 mm
Weight	78 g
Manufacturer information	
Manufacturer	Toshiba
Manufacturer's product ID	THNSNJ256WCST

Table 93: 5MMSSD.0256-00 - Technical data

1) Yes, although applies only if all components installed within the complete system have this certification
2) IOPS: Random read and write input/output operations per second.
3) TBW: Terabytes written

3.8.7.4 Temperature humidity diagram

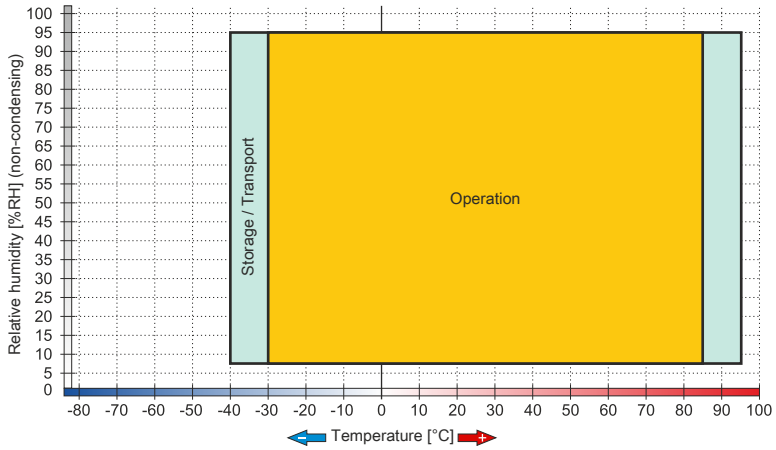

Figure 44: 5MMSSD.0256-00 - Temperature humidity diagram

3.8.8 5AC901.CCFA-00

3.8.8.1 General information

This CFast adapter is a slide-in compact adapter that allows a CFast card to be inserted and operated on a B&R Industrial PC. The CFast adapter can be used in APC910 and PPC900 system units.

- CFast slot
- Slide-in compact

3.8.8.2 Order data

Model number	Short description	Figure
	Drives	
5AC901.CCFA-00	CFast adapter for operating a CFast card in a slide-in compact slot	
	Optional accessories	
	CFast cards	
5CFAST.016G-00	CFast card, 16 GB	
5CFAST.032G-00	CFast card, 32 GB	
5CFAST.2048-00	CFast card, 2 GB	
5CFAST.4096-00	CFast card, 4 GB	
5CFAST.8192-00	CFast card, 8 GB	

Table 94: 5AC901.CCFA-00 - Order data

3.8.8.3 Technical data

Caution!

A sudden loss of power may result in data loss! In very rare cases, the mass storage device may also become damaged.

To prevent damage and loss of data, the use of a UPS device is recommended.

Information:

The following characteristics, features and limit values only apply to this accessory and can deviate from those specified for the complete system. The data specifications for the complete system take precedence over those of individual components.

Product ID	5AC901.CCFA-00
General information	
Certification	
CE	Yes
cULus	Yes
cULus HazLoc Class 1 Division 2	Yes [1)]
GOST-R	Yes
GL	Yes [1)]
Interfaces	
CFast slot	
Quantity	1
Environmental conditions	
Temperature	
Operation	Depends on the CFast card being used
Storage	Depends on the CFast card being used
Transport	Depends on the CFast card being used
Relative humidity	
Operation	Depends on the CFast card being used
Storage	Depends on the CFast card being used
Transport	Depends on the CFast card being used

Table 95: 5AC901.CCFA-00 - Technical data

1) Yes, although applies only if all components installed within the complete system have this certification

3.8.9 5AC901.SDVW-00

3.8.9.1 General information

The DVD-R/RW slide-in drive can be used in APC910 system units and PPC800 bus units with a slide-in drive slot.

- DVD-R/RW, DVD+R/RW drive
- Slide-in

3.8.9.2 Order data

Model number	Short description	Figure
	Drives	
5AC901.SDVW-00	DVD-R/RW DVD+R/RW SATA slide-in drive	

Table 96: 5AC901.SDVW-00 - Order data

3.8.9.3 Technical data

Information:

The following characteristics, features and limit values only apply to this accessory and can deviate from those specified for the complete system. The data specifications for the complete system take precedence over those of individual components.

Product ID	5AC901.SDVW-00
General information	
Certification CE cULus cULus HazLoc Class 1 Division 2 GOST-R	 Yes Yes Yes [1)] Yes
CD / DVD drive	
Data buffer capacity	2 MB
Data transfer rate	Max. 33.3 MB/s
Speed	Max. 5160 rpm ±1%
Noise level	Approx. 45 dBA in a distance of 50 cm (full read access)
Compatible formats	CD-DA, CD-ROM mode 1/mode 2 CD-ROM XA mode 2 (form 1, form 2) Photo CD (single-/multi-session), Enhanced CD, CD text DVD-ROM, DVD-R, DVD-R (dual layer), DVD-RW, DVD-Video DVD-RAM (4.7 GB, 2.6 GB) DVD+R, DVD+R (dual layer), DVD+RW
Laser class	Class 1 laser
Service life	60000 POH (power-on hours)
Interface	SATA
Startup time CD DVD	 Max. 14 seconds (from 0 rpm to read access) Max. 15 seconds (from 0 rpm to read access)
Access time CD DVD	 On average 140 ms (24x) On average 150 ms (8x)
Readable media CD DVD	 CD/CD-ROM (12 cm, 8 cm), CD-R, CD-RW DVD-ROM, DVD-R, DVD-R (dual layer), DVD-RW. DVD-RAM, DVD+R, DVD+R (dual layer), DVD+RW, DVD-RAM
Writable media CD DVD	 CD-R, CD-RW DVD-R/RW, DVD-R (dual layer), DVD-RAM (4.7 GB), DVD+R/RW, DVD+R (dual layer)
Read speed CD DVD	 24x 8x

Table 97: 5AC901.SDVW-00 - Technical data

Product ID	5AC901.SDVW-00
Write speed	
CD-R	24x, 16x, 10x and 4x
CD-RW	24x, 16x, 10x and 4x
DVD+R	8x, 4x and 2.4x
DVD+R (dual layer)	6x, 4x and 2.4x
DVD+RW	4x and 2x
DVD-R	8x, 4x and 2x
DVD-R (dual layer)	6x, 4x and 2x
DVD-RAM 2)	5x, 3x and 2x
DVD-RW	6x, 4x and 2x
Write methods	
CD	Disk at once, session at once, packet write, track at once
DVD	Disk at once, incremental, overwrite, sequential, multi-session
Environmental conditions	
Temperature 3)	
Operation	5 to 55°C 4)
Storage	-20 to 60°C
Transport	-40 to 65°C
Relative humidity	
Operation	8 to 80%, non-condensing
Storage	5 to 95%, non-condensing
Transport	5 to 95%, non-condensing
Vibration	
Operation	5 to 500 Hz: 0.2 g
Storage	5 to 500 Hz: 2 g
Transport	5 to 500 Hz: 2 g
Shock	
Operation	At max. 5 g and 11 ms duration
Storage	At max. 60 g and 11 ms duration At max. 200 g and 2 ms duration
Transport	At max. 60 g and 11 ms duration At max. 200 g and 2 ms duration
Mechanical characteristics	
Dimensions	
Width	22 mm
Height	172.5 mm
Depth	150 mm
Weight	400 g

Table 97: 5AC901.SDVW-00 - Technical data

1) Yes, although applies only if all components installed within the complete system have this certification
2) RAM drivers are not provided by the manufacturer. Support of RAM function by "Nero" burning software (model number 5SWUTI.0000-00) or other burning software packages or drivers from third-party providers.
3) Temperature specifications refer to operation at 500 meters. The maximum ambient temperature is typically derated by 1°C per 1000 meters (starting at 500 meters above sea level).
4) Drive surface temperature.

3.8.9.4 Temperature humidity diagram

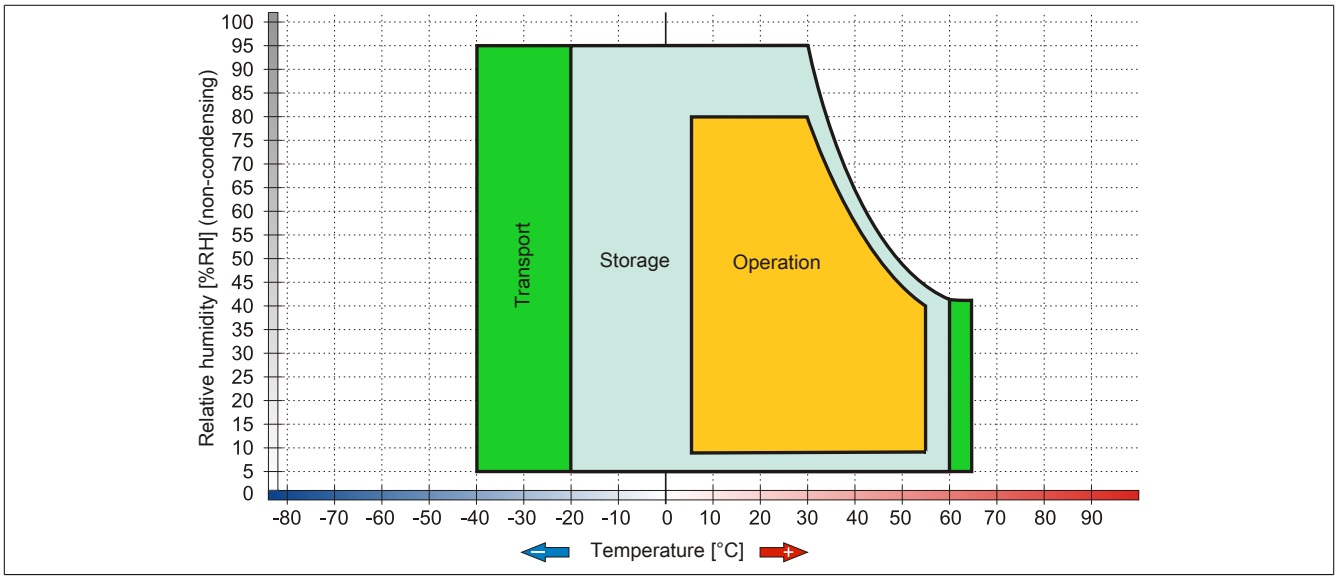

Figure 45: 5AC901.SDVW-00 - Temperature humidity diagram

3.8.10 5AC901.SSCA-00

3.8.10.1 General information

The slide-in compact adapter is a slide-in adapter that allows slide-in compact drives to be installed and operated on a B&R Industrial PC. The slide-in compact drive can be used in APC910 and PPC900 system units.

- Slide-in compact slot
- Slide-in

3.8.10.2 Order data

Model number	Short description	Figure
	Drives	
5AC901.SSCA-00	Slide-in compact adapter for operating a slide-in compact drive in a slide-in slot.	
	Optional accessories	
	Drives	
5AC901.CCFA-00	CFast adapter for operating a CFast card in a slide-in compact slot	
5AC901.CHDD-01	500 GB SATA hard disk, slide-in compact, 24/7 operation Note: please see the manual for information about using this hard disk	
5AC901.CSSD-00	32 GB SATA SSD (SLC), slide-in compact	
5AC901.CSSD-03	60 GB SATA slide-in compact SSD (MLC)	
5AC901.CSSD-04	128 GB SATA SSD (MLC), slide-in compact	
5AC901.CSSD-05	256 GB SSD MLC - Slide-in compact - Toshiba - SATA	

Table 98: 5AC901.SSCA-00 - Order data

3.8.10.3 Technical data

Caution!

A sudden loss of power may result in data loss! In very rare cases, the mass storage device may also become damaged.

To prevent damage and loss of data, the use of a UPS device is recommended.

Information:

The following characteristics, features and limit values only apply to this accessory and can deviate from those specified for the complete system. The data specifications for the complete system take precedence over those of individual components.

Product ID	5AC901.SSCA-00
General information	
Certification	
CE	Yes
cULus	Yes
cULus HazLoc Class 1 Division 2	Yes [1)]
GOST-R	Yes
Inserts	
Slide-in compact drives	1
Environmental conditions	
Temperature	
Operation	Depending on the slide-in compact drive being used
Storage	Depending on the slide-in compact drive being used
Transport	Depending on the slide-in compact drive being used
Relative humidity	
Operation	Depending on the slide-in compact drive being used
Storage	Depending on the slide-in compact drive being used
Transport	Depending on the slide-in compact drive being used

Table 99: 5AC901.SSCA-00 - Technical data

1) Yes, although applies only if all components installed within the complete system have this certification

3.9 Interface options

Information:

Please note that not every interface option can be installed in interface slots 1 and 2. For more information, see "IF option 1 slot" on page 53 and "IF option 2 slot" on page 53.

Information:

For information about installing or replacing an interface option, please refer to the section "Installing the interface option" on page 139.

Depending on the IF option version, it may be necessary to load the setup defaults in BIOS after replacement or installation (see "Save & Exit" on page 221).

3.9.1 5AC901.I485-00

3.9.1.1 General information

The 5AC901.I485-00 interface option is equipped with an RS232/422/485 interface. The operating mode (RS232/RS422/RS485) is selected automatically depending on the electrical connection.

- 1x RS232/422/485 interface
- Can be installed in APC910 and PPC900 systems

3.9.1.2 Order data

Model number	Short description	Figure
	Interface options	
5AC901.I485-00	RS232/422/485 interface option; for installation in an APC910 or PPC900	

Table 100: 5AC901.I485-00 - Order data

3.9.1.3 Technical data

Information:

The following characteristics, features and limit values only apply to this accessory and can deviate from those specified for the complete system. The data specifications for the complete system take precedence over those of individual components.

Product ID	5AC901.I485-00
General information	
B&R ID code	0xD84A
Certification	
CE	Yes
cULus	Yes
cULus HazLoc Class 1 Division 2	Yes [1)]
GOST-R	Yes
GL	Yes [1)]
Interfaces	
COM	
Type	RS232/422/485, electrically isolated
Design	9-pin male DSUB connector
UART	16550-compatible, 16-byte FIFO
Max. baud rate	115 kbit/s
Terminating resistor	Yes
Electrical characteristics	
Power consumption	1 W

Table 101: 5AC901.I485-00 - Technical data

Product ID	5AC901.I485-00
Environmental conditions	
Temperature	
Operation	0 to 55°C [2]
Storage	-20 to 60°C
Transport	-20 to 60°C
Relative humidity	
Operation	5 to 90%, non-condensing
Storage	5 to 95%, non-condensing
Transport	5 to 95%, non-condensing
Mechanical characteristics	
Weight	Approx. 34 g

Table 101: 5AC901.I485-00 - Technical data

1) Yes, although applies only if all components installed within the complete system have this certification
2) Detailed information can be found in the temperature tables in the user's manual.

3.9.1.3.1 Pinout

COM serial interface			
	RS232	RS422/485	
Type	RS232; not modem-capable; electrically isolated		
UART	16550-compatible, 16-byte FIFO		
Transfer rate	Max. 115 kbit/s		
Bus length	Max. 15 m	Max. 1200 m	9-pin male DSUB connector
Pin	**RS232 - Pinout**	**RS422 - Pinout**	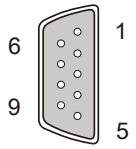
1	NC	TXD\	
2	RXD	NC	
3	TXD	NC	
4	NC	TXD	
5	GND	GND	
6	NC	RXD\	
7	RTS	NC	
8	CTS	NC	
9	NC	RXD	

Table 102: COM - Pinout

3.9.1.3.2 RS232 - Bus length and cable type

The maximum transfer rate of 115 kbit/s depends on the type of cable being used.

Extension	Transfer rate
≤15 m	Typ. 64 kbit/s
≤10 m	Typ. 115 kbit/s
≤5 m	Typ. 115 kbit/s

Table 103: RS232 - Bus length and transfer rate

The material used for the cable should have all or most of the following properties in order to achieve an optimal transfer rate.

RS232 cables	Property
Signal lines	
Cable cross section	4x 0.16 mm² (26AWG), tinned Cu stranded wire
Wire insulation	PE
Conductor resistance	≤82 Ω/ km
Stranding	Wires stranded in pairs
shield	Paired shield with aluminum foil
Grounding line	
Cable cross section	1x 0.34 mm² (22AWG/19), tinned Cu stranded wire
Wire insulation	PE
Conductor resistance	≤59 Ω/km
Outer sheathing	
Materials	PUR mixture
Features	Halogen-free
Cable shielding	From tinned copper wires

Table 104: RS232 - Cable requirements

3.9.1.3.3 RS422 - Bus length and cable type

The RTS line must be switched on to switch the transmitter to active.

The maximum transfer rate of 115 kbit/s depends on the type of cable being used.

Extension	Transfer rate
1200 m	Typ. 115 kbit/s

Table 105: RS422 - Bus length and transfer rate

The material used for the cable should have all or most of the following properties in order to achieve an optimal transfer rate.

RS422 cables	Property
Signal lines	
Cable cross section	4x 0.25 mm² (24AWG/19), tinned Cu stranded wire
Wire insulation	PE
Conductor resistance	≤82 Ω/km
Stranding	Wires stranded in pairs
shield	Paired shield with aluminum foil
Grounding line	
Cable cross section	1x 0.34 mm² (22AWG/19), tinned Cu stranded wire
Wire insulation	PE
Conductor resistance	≤59 Ω/km
Outer sheathing	
Materials	PUR mixture
Features	Halogen-free
Cable shielding	From tinned copper wires

Table 106: RS422 - Cable requirements

3.9.1.3.4 When operated as an RS485 interface

When operated in this mode, the pins of the RS422 default interface (1, 4, 6 and 9) must be used. Pins should be connected as shown.

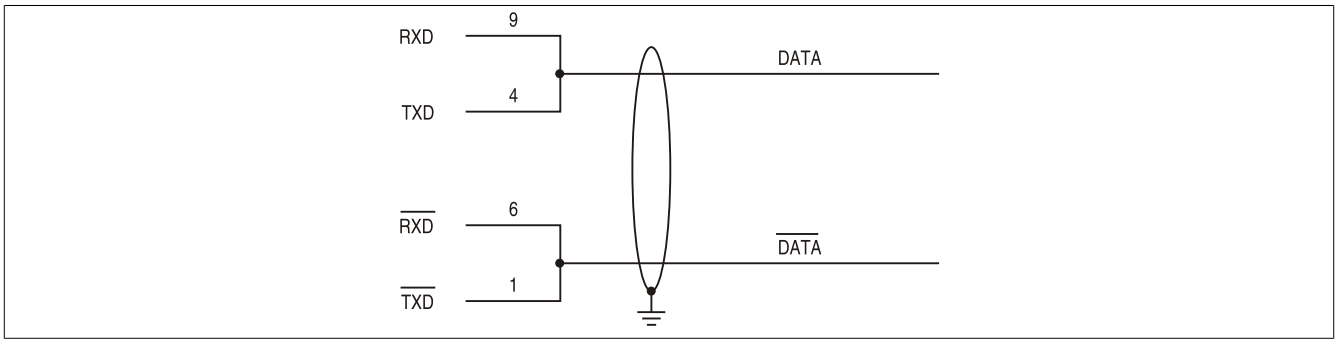

Figure 46: RS232/422/485 interface - Operation in RS485 mode

The RTS line must be switched by the driver for each transmission or reception; there is no automatic switch-back mechanism. This cannot be configured in Windows.

The voltage drop resulting from long cable lengths can lead to greater potential differences between bus stations, which can hinder communication. This can be improved by running ground wire with the others.

3.9.1.3.5 RS485 - Bus length and cable type

The maximum transfer rate of 115 kbit/s depends on the type of cable being used.

Extension	Transfer rate
1200 m	Typ. 115 kbit/s

Table 107: RS485 - Bus length and transfer rate

The material used for the cable should have all or most of the following properties in order to achieve an optimal transfer rate.

RS485 cables	Property
Signal lines	
Cable cross section	4x 0.25 mm² (24AWG/19), tinned Cu stranded wire
Wire insulation	PE
Conductor resistance	≤82 Ω/km
Stranding	Wires stranded in pairs
shield	Paired shield with aluminum foil

Table 108: RS485 - Cable requirements

RS485 cables	Property
Grounding line	
Cable cross section	1x 0.34 mm² (22AWG/19), tinned Cu stranded wire
Wire insulation	PE
Conductor cross section	≤59 Ω/km
Outer sheathing	
Materials	PUR mixture
Features	Halogen-free
Cable shielding	From tinned copper wires

Table 108: RS485 - Cable requirements

3.9.1.3.6 Terminating resistor

A terminating resistor for the serial interface is already integrated in the IF option. There is a switch to activate or deactivate the terminating resistor, but the system unit needs to be opened in order to reach it. An active terminating resistor is indicated by a yellow LED.

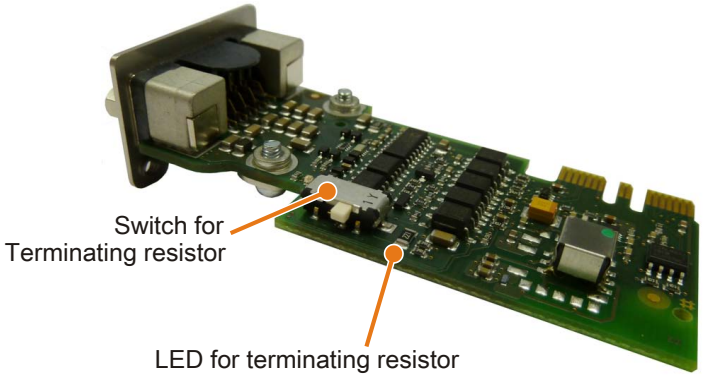

Figure 47: 5AC901.I485-00 - Terminating resistor

3.9.2 5AC901.ICAN-00

3.9.2.1 General information

The 5AC901.ICAN-00 interface option is equipped with a CAN master interface.

- 1x CAN bus master interface
- Can be installed in APC910 and PPC900 systems

It is not possible to operate two 5AC901.ICAN interface options (in the IF option 1 and IF option 2 slots) at the same time.

3.9.2.2 Order data

Model number	Short description	Figure
	Interface options	
5AC901.ICAN-00	CAN interface option; for installation in an APC910 or PPC900	

Table 109: 5AC901.ICAN-00 - Order data

3.9.2.3 Technical data

Information:

The following characteristics, features and limit values only apply to this accessory and can deviate from those specified for the complete system. The data specifications for the complete system take precedence over those of individual components.

Product ID	5AC901.ICAN-00
General information	
B&R ID code	0xD84B
Certification	
CE	Yes
cULus	Yes
cULus HazLoc Class 1 Division 2	Yes [1]
GOST-R	Yes
Interfaces	
CAN	
Quantity	1
Controller	Bosch CC770 (compatible with Intel 82527 CAN controller)
Design	9-pin male DSUB connector
Transfer rate	Max. 500 kbit/s
Terminating resistor	Yes
Electrical characteristics	
Power consumption	1 W
Environmental conditions	
Temperature	
Operation	0 to 55°C [2]
Storage	-20 to 60°C
Transport	-20 to 60°C
Relative humidity	
Operation	5 to 90%, non-condensing
Storage	5 to 95%, non-condensing
Transport	5 to 95%, non-condensing
Mechanical characteristics	
Weight	Approx. 33 g

Table 110: 5AC901.ICAN-00 - Technical data

1) Yes, although applies only if all components installed within the complete system have this certification
2) Detailed information can be found in the temperature tables in the user's manual.

3.9.2.3.1 Pinout

CAN bus		
Type	Electrically isolated	9-pin male DSUB connector 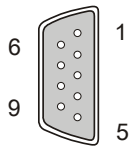
Transfer rate	Max. 500 kbit/s	
Bus length	Max. 1000 meters	
Pin	**Assignment**	
1	NC	
2	CAN low	
3	GND	
4	NC	
5	NC	
6	Reserved	
7	CAN high	
8	NC	
9	NC	

Table 111: 5AC901.ICAN-00 - Pinout

3.9.2.3.2 Terminating resistor

A terminating resistor for the CAN interface is already integrated in the IF option. There is a switch to activate or deactivate the terminating resistor, but the system unit needs to be opened in order to reach it. An active terminating resistor is indicated by a yellow LED.

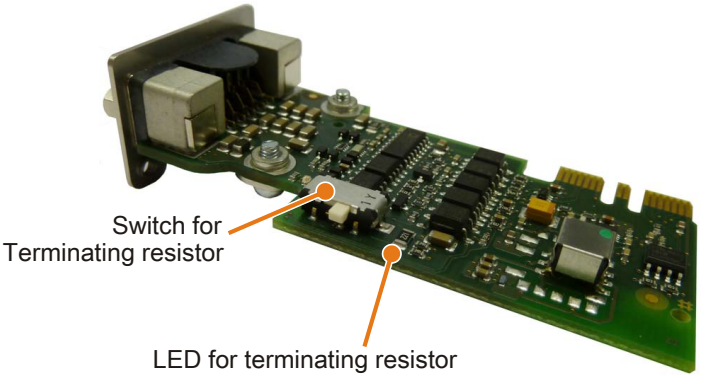

Figure 48: 5AC901.ICAN-00 - Terminating resistor

3.9.2.3.3 Drivers

The CAN IF option is supported in PVI for Windows XP Professional and Windows Embedded Standard 2009.

3.9.3 5AC901.ISRM-00

3.9.3.1 General information

The 5AC901.ISRM-00 interface option has 2 MB SRAM.

- 2 MB SRAM
- Can be installed in APC910 and PPC900 systems

The SRAM interface option 5AC901.ISRM-00 can only be operated in the IF option 2 slot.

Information:

When writing, reading or accessing the SRAM, "non-aligned-accesses" are not supported by the AVLON bus (internal bus in the PCI Express core).

3.9.3.2 Order data

Model number	Short description	Figure
	Interface options	
5AC901.ISRM-00	SRAM interface option, 2 MB; for installation in an APC910 or PPC900	

Table 112: 5AC901.ISRM-00 - Order data

3.9.3.3 Technical data

Information:

The following characteristics, features and limit values only apply to this accessory and can deviate from those specified for the complete system. The data specifications for the complete system take precedence over those of individual components.

Product ID	5AC901.ISRM-00
General information	
B&R ID code	0xD850
Certification	
CE	Yes
cULus	Yes
cULus HazLoc Class 1 Division 2	Yes [1]
GOST-R	Yes
Controller	
SRAM	
Size	2 MB
Battery backed	Yes
Remanent variables in power failure mode	512 kB (e.g. for Automation Runtime, see the AS help documentation)
Electrical characteristics	
Power consumption	2 W
Environmental conditions	
Temperature	
Operation	0 to 55°C [2]
Storage	-20 to 60°C
Transport	-20 to 60°C
Relative humidity	
Operation	5 to 90%, non-condensing
Storage	5 to 95%, non-condensing
Transport	5 to 95%, non-condensing
Mechanical characteristics	
Weight	Approx. 20 g

Table 113: 5AC901.ISRM-00 - Technical data

1) Yes, although applies only if all components installed within the complete system have this certification
2) Detailed information can be found in the temperature tables in the user's manual.

3.9.4 5AC901.IHDA-00

3.9.4.1 General information

The 5AC901.IHDA-00 interface option has an HDA sound chip with externally accessible MIC, Line IN and Line OUT channels.

- 1x MIC
- 1x Line IN
- 1x Line OUT
- Can be installed in APC910 and PPC900 systems

The interface option 5AC901.IHDA-00 can only be operated in the IF option 1 slot.

3.9.4.2 Order data

Model number	Short description	Figure
	Interface options	
5AC901.IHDA-00	Audio interface option; connection for 1x MIC, 1x Line IN, 1x Line OUT; for installation in an APC910	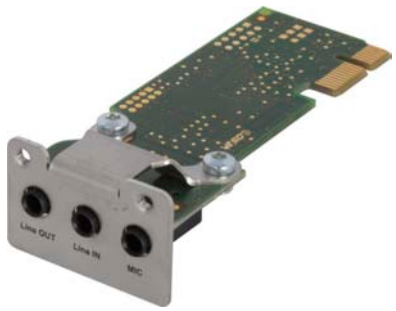

Table 114: 5AC901.IHDA-00 - Order data

3.9.4.3 Technical data

Information:

The following characteristics, features and limit values only apply to this accessory and can deviate from those specified for the complete system. The data specifications for the complete system take precedence over those of individual components.

Product ID	5AC901.IHDA-00
General information	
B&R ID code	0xD84E
Certification	
CE	Yes
cULus	Yes
cULus HazLoc Class 1 Division 2	Yes [1]
GOST-R	Yes
GL	Yes [1]
Interfaces	
Audio	
Type	HDA sound
Controller	Realtek ALC 662
Inputs	Microphone, Line IN
Outputs	Line OUT
Electrical characteristics	
Power consumption	0.4 W
Environmental conditions	
Temperature	
Operation	0 to 55°C [2]
Storage	-20 to 60°C
Transport	-20 to 60°C
Relative humidity	
Operation	5 to 90%, non-condensing
Storage	5 to 95%, non-condensing
Transport	5 to 95%, non-condensing
Mechanical characteristics	
Weight	Approx. 21 g

Table 115: 5AC901.IHDA-00 - Technical data

1) Yes, although applies only if all components installed within the complete system have this certification
2) Detailed information can be found in the temperature tables in the user's manual.

3.9.4.3.1 Pinout

MIC, Line IN, Line OUT		
Controller	Realtek ALC 662	3.5 mm jack, female
MIC	Connection of a mono microphone with a 3.5 mm jack	
Line IN	Stereo Line IN signal supplied via a 3.5 mm jack	
Line OUT	Connection of a stereo playback device (e.g. amplifier) via a 3.5 mm jack	

Table 116: 5AC901.IHDA-00 - Pinout

A special driver is required in order to operate the audio controller. Drivers for approved operating systems are available in the Downloads section of the B&R website (www.br-automation.com).

Information:

Required drivers can only be downloaded from the B&R website, not from manufacturer websites.

3.9.5 5AC901.IRDY-00

3.9.5.1 General information

Since the 5AC901.IRDY-00 ready relay switches the relay contacts as soon as the B&R industrial PC has booted and is supplied internally with all voltages, it is possible to connect additional devices to the relay that will also be switched on.

- 1 N.C. contact, 1 N.O. contact
- Compatible with the APC910 and PPC900

3.9.5.2 Order data

Model number	Short description	Figure
	Interface options	
5AC901.IRDY-00	Ready relay interface option; for APC910	

Table 117: 5AC901.IRDY-00 - Order data

3.9.5.3 Technical data

Information:

The following characteristics, features and limit values only apply to this accessory and can deviate from those specified for the complete system. The data specifications for the complete system take precedence over those of individual components.

Product ID	5AC901.IRDY-00
General information	
B&R ID code	0xD84F
Ready relay	N.O. and N.C. contact, max. 30 VDC, max. 2 A
Certification	
CE	Yes
cULus	Yes
Electrical characteristics	
Power consumption	0.2 W
Environmental conditions	
Temperature	
Operation	0 to 55°C
Storage	-20 to 60°C
Transport	-20 to 60°C
Relative humidity	
Operation	5 to 90%
Storage	5 to 95%
Transport	5 to 95%
Mechanical characteristics	
Weight	Approx. 30 g

Table 118: 5AC901.IRDY-00 - Technical data

3.9.5.3.1 Pinout

Ready relay			
Pin	**Assignment**	**Description**	4-pin male connector 1 2 3 4 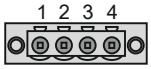
1	NO	Normally open contact	
2	COM	Changeover contact	
3	NC	Normally closed contact	
4	-	Not connected	

Table 119: 5AC901.IRDY-00 - Pinout

3.10 Uninterruptible power supply (UPS)

With an optionally integrated UPS, the B&R Industrial PC makes sure that the PC system completes write operations even when a power failure occurs. When the UPS detects a power failure, it switches to battery operation immediately without interruption. Any running programs will be properly terminated by the UPS. This eliminates the chance of inconsistent data (only works if the UPS has already been configured and the drive is enabled).

Information:

- **The monitor/panel is not buffered by the UPS and will shut off when the power fails.**
- **More detailed information about uninterruptible power supplies can be found in the user's manual for the external UPS. This can be downloaded from the B&R website.**

Because the charging circuit is integrated in the housing of the B&R Industrial PC, installation has been simplified to merely attaching the connection cable to the battery unit mounted next to the PC.

Special emphasis was placed on ease of maintenance when the battery unit was designed. Batteries are easily accessible from the front and can be replaced in just a few moments when servicing.

3.10.1 Requirements

- A suitable system unit
- UPS IF option 5AC901.IUPS-00 or 5AC901.IUPS-01
- Battery unit 5AC901.BUPS-00 or 5AC901.BUPS-01
- UPS connection cable 0.5 meters (5CAUPS.0005-01), 1 meter (5CAUPS.0010-01) or 3 meters (5CAUPS.0030-01)
- Configuration of the B&R UPS in the ADI Control Center

Warning!

The 5AC901.BUPS-00 battery unit must only be operated with the 5AC901.IUPS-00 UPS IF option!

The 5AC901.BUPS-01 battery unit must only be operated with the 5AC901.IUPS-01 UPS IF option!

Information:

For information about installation and connecting to the UPS IF option, see "Installing and connecting the UPS battery unit" on page 152.

3.10.2 5AC901.IUPS-00

3.10.2.1 General information

The 5AC901.IUPS-00 UPS IF option, together with the 5AC901.BUPS-00 battery unit, allows the B&R Industrial PC to be shut down without any loss of data during a power failure.

The 5AC901.IUPS-00 UPS interface option can only be operated in the IF option 1 slot.

Warning!

The 5AC901.IUPS-00 UPS IF option is only permitted to be operated with the 5AC901.BUPS-00 battery unit!

Information:

If the system is in standby mode (S5: Soft-off mode or S4: Hibernation mode - suspend-to-disk), then the internal UPS interface option charges the connected battery unit. The system's internal power supplies are active during this procedure. This allows various actions to be completed (e.g. opening the tray of the slide-in DVD drive).

3.10.2.2 Order data

Model number	Short description	Figure
	Uninterruptible power supplies	
5AC901.IUPS-00	UPS interface option; for installation in an APC910 or PPC900; for 4.5 Ah battery	
	Required accessories	
	Uninterruptible power supplies	
5AC901.BUPS-00	Battery unit 4.5 Ah; for UPS 5AC901.IUPS-00	
5CAUPS.0005-01	UPS cable 0.5 m; for 5AC901.IUPS-00 and 5AC901.IUPS-01 UPS	
5CAUPS.0010-01	UPS cable 1 m; for 5AC901.IUPS-00 and 5AC901.IUPS-01 UPS	
5CAUPS.0030-01	UPS cable 3 m; for 5AC901.IUPS-00 and 5AC901.IUPS-01 UPS	

Table 120: 5AC901.IUPS-00 - Order data

3.10.2.3 Technical data

Information:

The following characteristics, features and limit values only apply to this accessory and can deviate from those specified for the complete system. The data specifications for the complete system take precedence over those of individual components.

Product ID	5AC901.IUPS-00
General information	
B&R ID code	0xD851
Certification	
CE	Yes
cULus	Yes
cULus HazLoc Class 1 Division 2	Yes [1)]
GOST-R	Yes
Electrical characteristics	
Power consumption	Max. 30 W at 1 A
Deep discharge protection	Yes
Short circuit protection	Yes [2)]
Battery Charging Rating	
Charging current	Typ. 1 A
Environmental conditions	
Temperature	
Operation	0 to 55°C [3)]
Storage	-20 to 60°C
Transport	-20 to 60°C

Table 121: 5AC901.IUPS-00 - Technical data

Product ID	5AC901.IUPS-00
Relative humidity	
Operation	5 to 90%, non-condensing
Storage	5 to 95%, non-condensing
Transport	5 to 95%, non-condensing
Mechanical characteristics	
Weight	Approx. 28 g

Table 121: 5AC901.IUPS-00 - Technical data

1) Yes, although applies only if all components installed within the complete system have this certification
2) The interface option provides protection against short circuits. This does not apply to the connected battery unit.
3) Detailed information can be found in the temperature tables in the user's manual.

3.10.2.3.1 Pinout

UPS interface		
Pin	**Assignment**	4-pin male connector 1 2 3 4 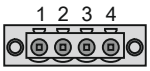
1	Temperature sensor	
2	Temperature sensor	
3	-	
4	+	

Table 122: 5AC901.IUPS-00 / -01 - Pinout

3.10.2.4 Installation

This module is installed using the materials included in delivery. For more information regarding installation, see "Installing the interface option" on page 139.

3.10.3 5AC901.IUPS-01

3.10.3.1 General information

The 5AC901.IUPS-01 UPS IF option, together with the 5AC901.BUPS-01 battery unit, allows the B&R Industrial PC to be shut down without any loss of data during a power failure.

The 5AC901.IUPS-01 UPS interface option can only be operated in the IF option 1 slot.

Warning!

The 5AC901.IUPS-01 UPS IF option is only permitted to be operated with the 5AC901.BUPS-01 battery unit!

Information:

If the system is in standby mode (S5: Soft-off mode or S4: Hibernation mode - suspend-to-disk), then the internal UPS interface option charges the connected battery unit. The system's internal power supplies are active during this procedure. This allows various actions to be completed (e.g. opening the tray of the slide-in DVD drive).

3.10.3.2 Order data

Model number	Short description	Figure
	Uninterruptible power supplies	
5AC901.IUPS-01	UPS interface option; for installation in an APC910 or PPC900; for 2.2 Ah battery	
	Required accessories	
	Uninterruptible power supplies	
5AC901.BUPS-01	Battery unit 2.2 Ah; for UPS 5AC901.IUPS-01	
5CAUPS.0005-01	UPS cable 0.5 m; for 5AC901.IUPS-00 and 5AC901.IUPS-01 UPS	
5CAUPS.0010-01	UPS cable 1 m; for 5AC901.IUPS-00 and 5AC901.IUPS-01 UPS	
5CAUPS.0030-01	UPS cable 3 m; for 5AC901.IUPS-00 and 5AC901.IUPS-01 UPS	

Table 123: 5AC901.IUPS-01 - Order data

3.10.3.3 Technical data

Information:

The following characteristics, features and limit values only apply to this accessory and can deviate from those specified for the complete system. The data specifications for the complete system take precedence over those of individual components.

Product ID	5AC901.IUPS-01
General information	
B&R ID code	0xDF84
Certification	
CE	Yes
cULus	Yes
cULus HazLoc Class 1 Division 2	Yes [1]
GOST-R	Yes
Electrical characteristics	
Power consumption	Max. 25 W at 0.9 A
Deep discharge protection	Yes
Short circuit protection	Yes [2]
Battery Charging Rating	
Charging current	Typ. 0.88 A
Environmental conditions	
Temperature	
Operation	0 to 55°C [3]
Storage	-20 to 60°C
Transport	-20 to 60°C

Table 124: 5AC901.IUPS-01 - Technical data

Product ID	5AC901.IUPS-01
Relative humidity	
Operation	5 to 90%, non-condensing
Storage	5 to 95%, non-condensing
Transport	5 to 95%, non-condensing
Mechanical characteristics	
Weight	Approx. 28 g

Table 124: 5AC901.IUPS-01 - Technical data

1) Yes, although applies only if all components installed within the complete system have this certification
2) The interface option provides protection against short circuits. This does not apply to the connected battery unit.
3) Detailed information can be found in the temperature tables in the user's manual.

3.10.3.3.1 Pinout

UPS interface		
Pin	**Assignment**	4-pin male connector 1 2 3 4 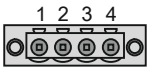
1	Temperature sensor	
2	Temperature sensor	
3	-	
4	+	

Table 125: 5AC901.IUPS-00 / -01 - Pinout

3.10.3.4 Installation

This module is installed using the materials included in delivery. For more information regarding installation, see "Installing the interface option" on page 139.

3.10.4 5AC901.BUPS-00

3.10.4.1 General information

- Battery unit for UPS IF option 5AC901.IUPS-00
- Single cell rechargeable battery
- 2 Hawker Cyclon 12 V 4.5 Ah rechargeable batteries connected in series
- Rated voltage: 24 V
- Capacity: 4.5 Ah

The battery unit has a limited service life and should be replaced regularly (after the specified service life at the latest).

Warning!

The battery unit 5AC901.BUPS-00 must only be operated with the UPS IF option 5AC901.IUPS-00!

3.10.4.2 Order data

Model number	Short description	Figure
	Uninterruptible power supplies	
5AC901.BUPS-00	Battery unit 4.5 Ah; for UPS 5AC901.IUPS-00	
	Required accessories	
	Uninterruptible power supplies	
5CAUPS.0005-01	UPS cable 0.5 m; for 5AC901.IUPS-00 and 5AC901.IUPS-01 UPS	
5CAUPS.0010-01	UPS cable 1 m; for 5AC901.IUPS-00 and 5AC901.IUPS-01 UPS	
5CAUPS.0030-01	UPS cable 3 m; for 5AC901.IUPS-00 and 5AC901.IUPS-01 UPS	

Table 126: 5AC901.BUPS-00 - Order data

3.10.4.3 Technical data

Product ID	5AC901.BUPS-00
General information	
Battery	
Type	Hawker Cyclon 12V 4.5 Ah; two rechargeable batteries connected in series
Service life	Up to 15 years at 20°C / 10 years at 25°C. [1]
Design	Single cell
Temperature sensor	NTC resistance
Maintenance interval during storage	6 month interval between charges
Certification	
CE	Yes
cULus	Yes
cULus HazLoc Class 1 Division 2	Yes [2]
GOST-R	Yes
Charge duration when battery low	Typ. 7 hours
Electrical characteristics	
Nominal voltage	24 V
Capacity	4.5 Ah
Fuse	Yes
Battery Charging Rating	
Charging current [3]	Typ. 1 A
Environmental conditions	
Temperature	
Operation	-30 to 60°C [4]
Storage	-65 to 80°C
Transport	-65 to 80°C
Relative humidity	
Operation	5 to 95%, non-condensing
Storage	5 to 95%, non-condensing
Transport	5 to 95%, non-condensing
Altitude	
Operation	Max. 3000 m

Table 127: 5AC901.BUPS-00 - Technical data

Product ID	5AC901.BUPS-00
Mechanical characteristics	
Dimensions	
Width	223.2 mm
Height	78.2 mm
Depth	145 mm
Weight	Approx. 4600 g

Table 127: 5AC901.BUPS-00 - Technical data

1) Depending on the charging and discharging cycles (up to 80% battery capacity).
2) Yes, although applies only if all components installed within the complete system have this certification
3) Maximum charging current.
4) Battery backing is no longer provided if the temperature falls below the minimum temperature or rises above the maximum temperature. Charging also no longer takes place since this could lead to battery damage.

3.10.4.4 Service life

The following diagram shows the relationship between ambient temperature and service life.

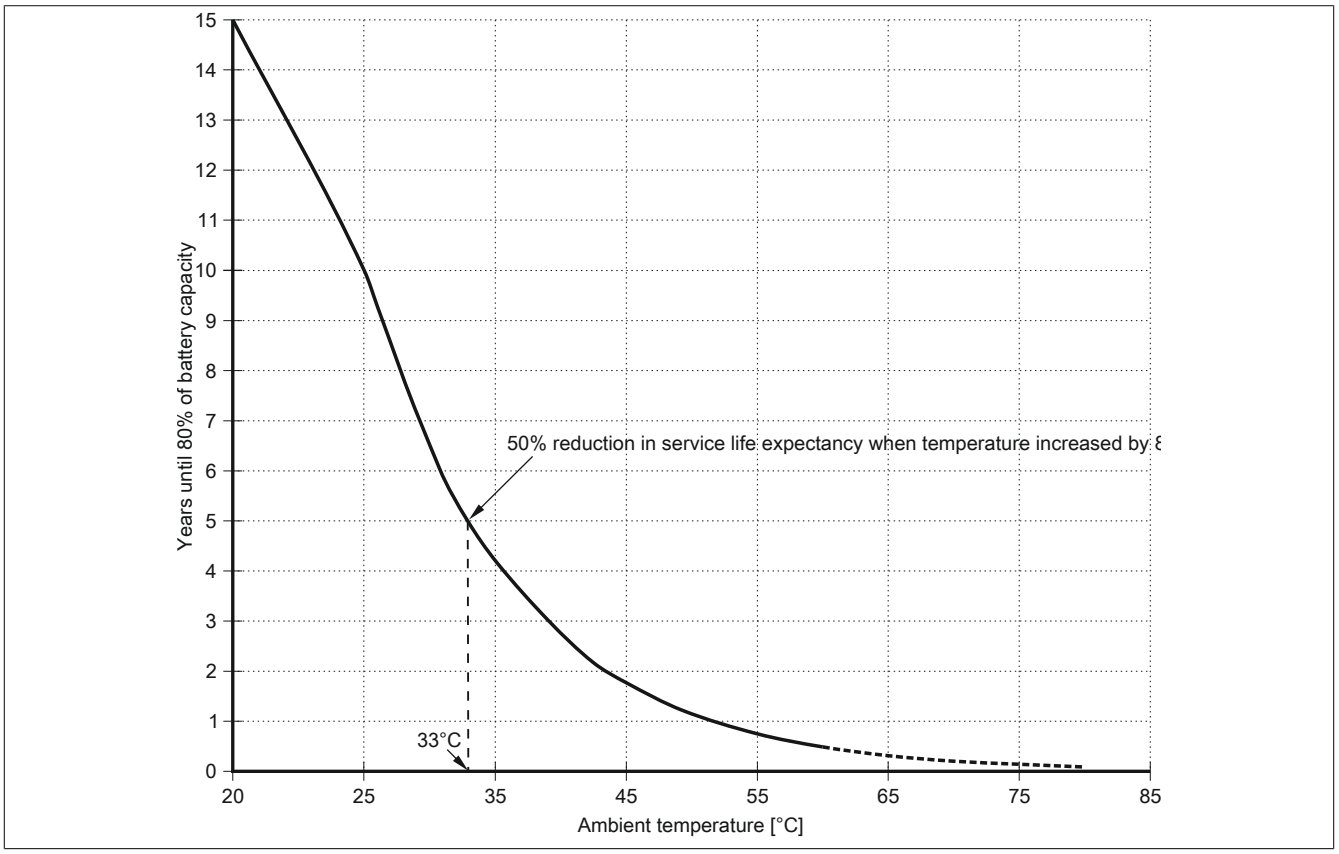

3.10.4.5 Dimensions

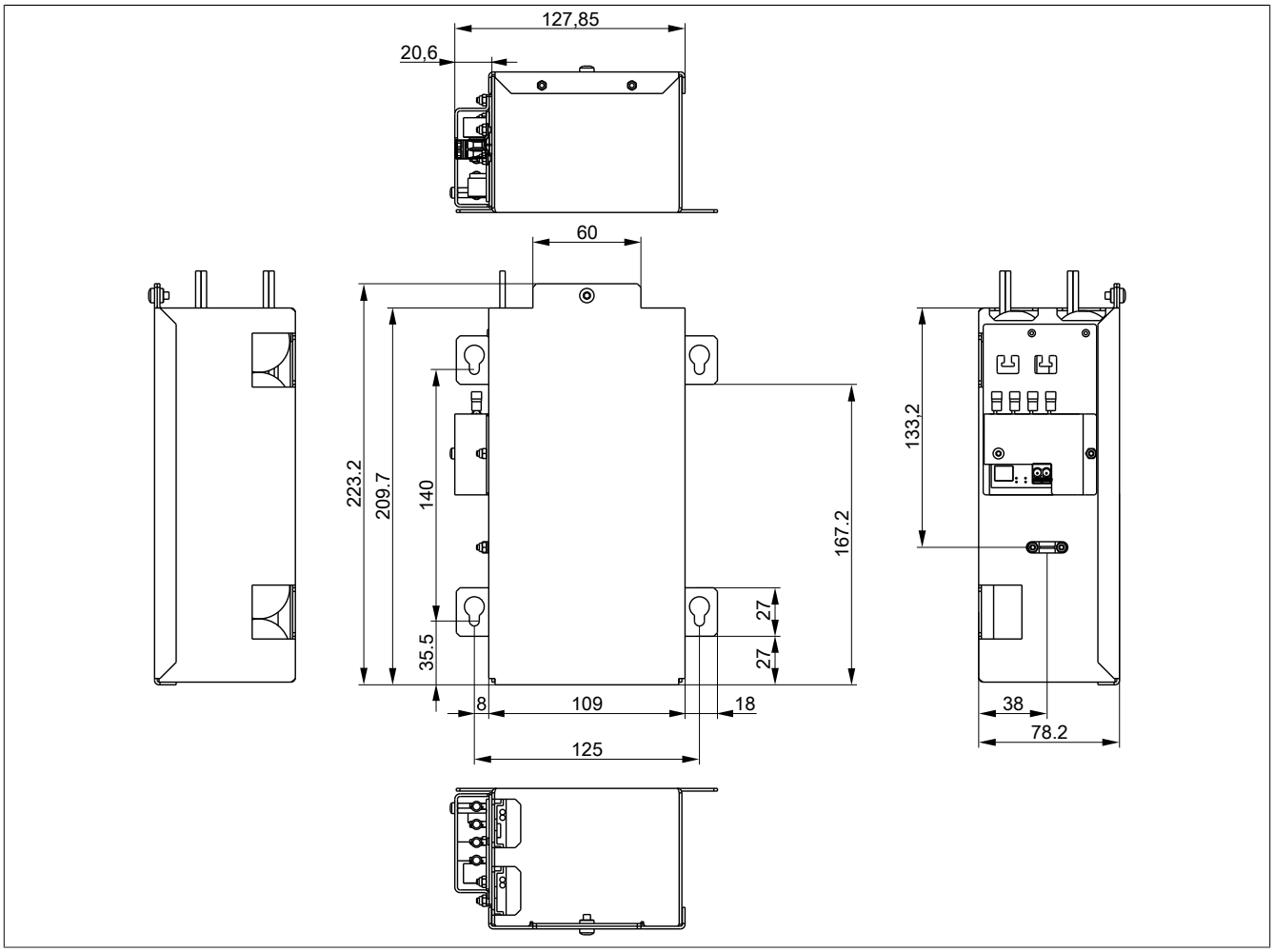

Figure 49: 5AC901.BUPS-00 - Dimensions

3.10.4.6 Drilling template

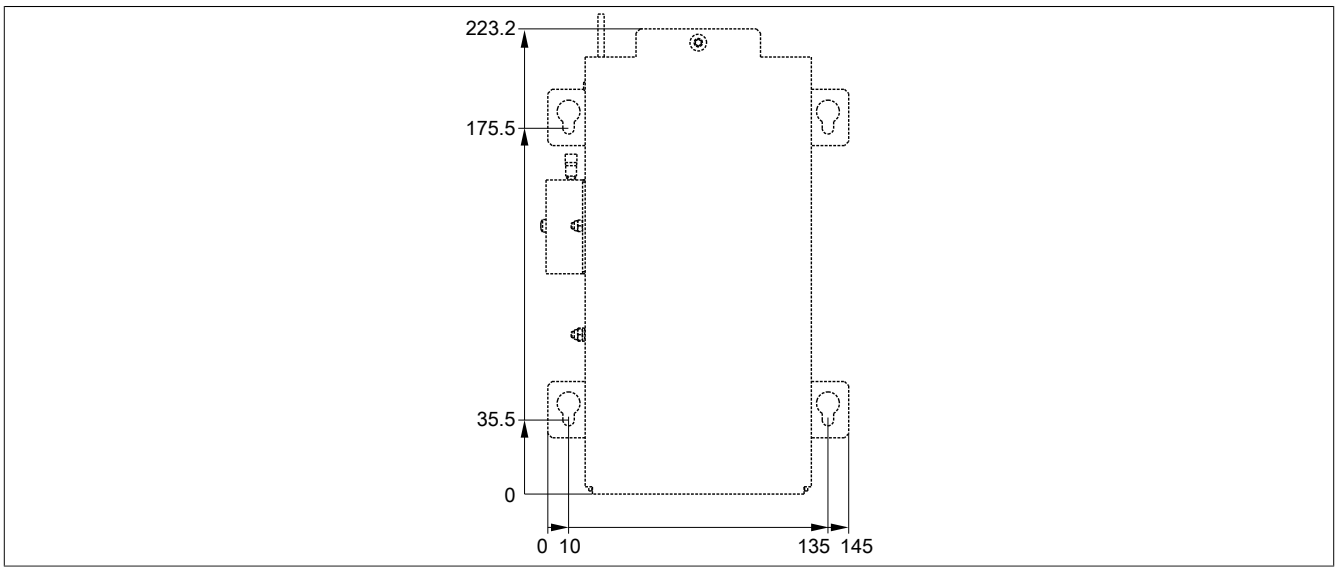

Figure 50: 5AC901.BUPS-00 - Drilling template

3.10.4.7 Installation

For information about installation and connecting to the UPS IF option, see "Installing and connecting the UPS battery unit" on page 152.

3.10.4.8 Precautions for handling and use

Spills and leaks:

Any further spillage or leakage must be prevented. Smaller spills must be bonded with dry sand, dirt and vermiculite. The use of flammable materials is prohibited. If possible, neutralize acids with sodium bicarbonate, chalk, etc. Acid-resistant clothing, shoes, gloves and face protection must be worn. The disposal of unneutralized acid in the sewage system is prohibited!

Waste disposal:

Used batteries must be disposed of in an environmentally friendly recycling process.

Neutralized mud must be stored in closed containers and stored/disposed of in accordance with applicable regulations. After neutralization and testing, larger spills diluted with water must be disposed of in accordance with applicable regulations.

Handling and storage:

- Batteries must be kept in cool, dry and well ventilated rooms with impermeable surfaces and appropriate containment conditions in case of leakage.
- Batteries must be protected from adverse weather conditions and separated from incompatible materials during storage and transport.
- A sufficient supply of water must be located nearby.
- Damage to containers where batteries are stored and transported must be prevented.
- Keep away from fire, sparks and excessive heat.

3.10.5 5AC901.BUPS-01

3.10.5.1 General information

- Battery unit for UPS IF option 5AC901.IUPS-01
- Maintenance-free lead acid battery
- 2 Panasonic 12 V 2.2 Ah rechargeable batteries connected in series
- Rated voltage: 24 V
- Capacity: 2.2 Ah

The battery unit has a limited service life and should be replaced regularly (after the specified service life at the latest).

Warning!

The battery unit 5AC901.BUPS-01 must only be operated with the UPS IF option 5AC901.IUPS-01!

3.10.5.2 Order data

Model number	Short description	Figure
	Uninterruptible power supplies	
5AC901.BUPS-01	Battery unit 2.2 Ah; for UPS 5AC901.IUPS-01	
	Required accessories	
	Uninterruptible power supplies	
5CAUPS.0005-01	UPS cable 0.5 m; for 5AC901.IUPS-00 and 5AC901.IUPS-01 UPS	
5CAUPS.0010-01	UPS cable 1 m; for 5AC901.IUPS-00 and 5AC901.IUPS-01 UPS	
5CAUPS.0030-01	UPS cable 3 m; for 5AC901.IUPS-00 and 5AC901.IUPS-01 UPS	

Table 128: 5AC901.BUPS-01 - Order data

3.10.5.3 Technical data

Product ID	5AC901.BUPS-01
General information	
Battery	
Type	Panasonic 12V 2.2 Ah; two rechargeable batteries connected in series
Service life	Up to 5 years at 20°C [1]
Design	Maintenance-free lead acid battery
Temperature sensor	NTC resistance
Maintenance interval during storage	6 month interval between charges
Certification	
CE	Yes
cULus	Yes
cULus HazLoc Class 1 Division 2	Yes [2]
GOST-R	Yes
Charge duration when battery low	Typ. 5 hours
Electrical characteristics	
Nominal voltage	24 V
Capacity	2.2 Ah
Fuse	Yes
Battery Charging Rating	
Charging current [3]	Typ. 0.88 A
Environmental conditions	
Temperature	
Operation	0 to 40°C [4]
Storage	-15 to 40°C
Transport	-15 to 40°C
Relative humidity	
Operation	25 to 85%, non-condensing
Storage	25 to 85%, non-condensing
Transport	25 to 85%, non-condensing
Altitude	
Operation	Max. 3000 m

Table 129: 5AC901.BUPS-01 - Technical data

Product ID	5AC901.BUPS-01
Mechanical characteristics	
Dimensions	
Width	188 mm
Height	78 mm
Depth	115 mm
Weight	Approx. 2550 g

Table 129: 5AC901.BUPS-01 - Technical data

1) Depends on the charging and discharging cycles.
2) Yes, although applies only if all components installed within the complete system have this certification
3) Maximum charging current.
4) Battery backing is no longer provided if the temperature falls below the minimum temperature or rises above the maximum temperature. Charging also no longer takes place since this could lead to battery damage.

3.10.5.4 Service life

The following diagram shows the relationship between ambient temperature and service life.

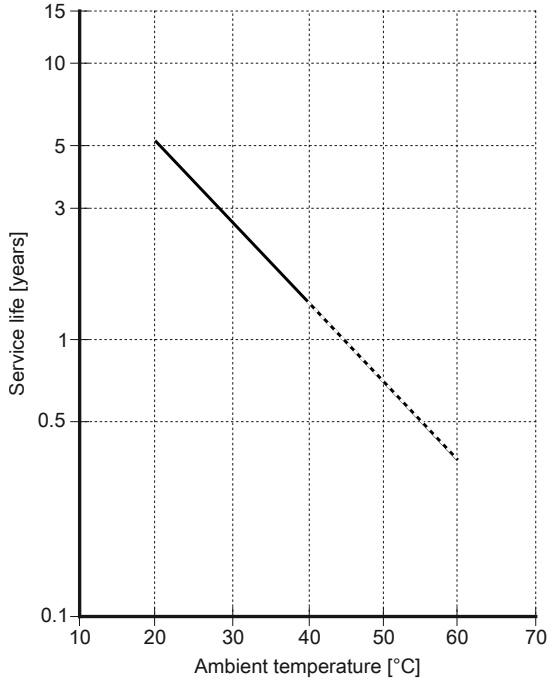

3.10.5.5 Dimensions

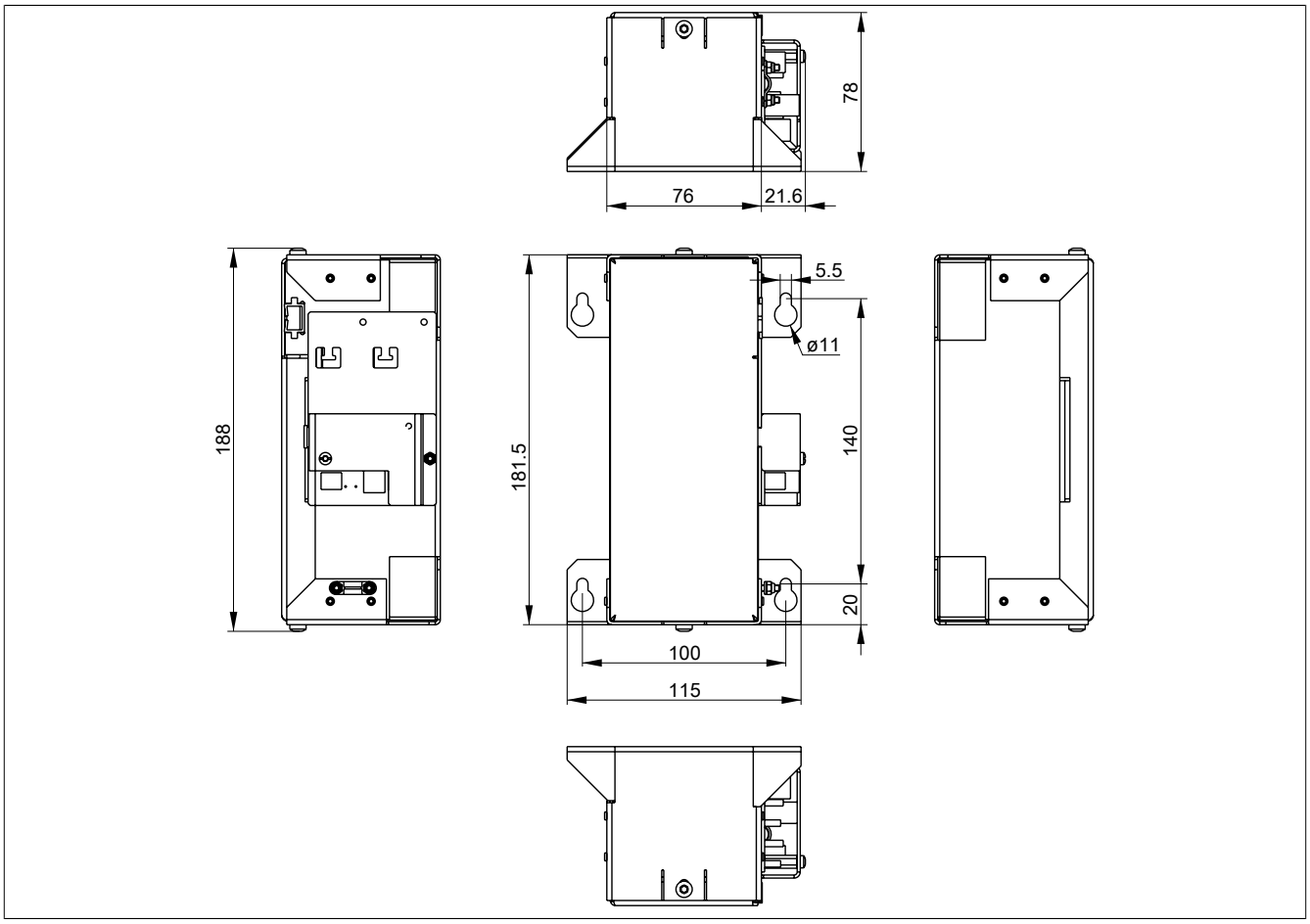

Figure 51: 5AC901.BUPS-01 - Dimensions

3.10.5.6 Drilling template

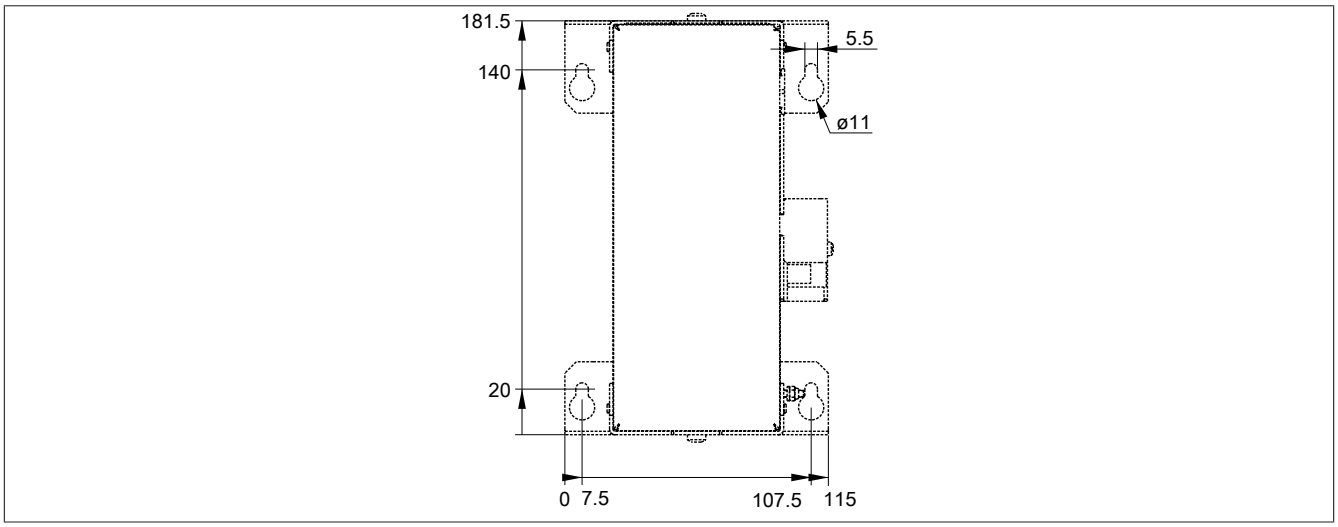

Figure 52: 5AC901.BUPS-01 - Drilling template

3.10.5.7 Installation

For information about installation and connecting to the UPS IF option, see "Installing and connecting the UPS battery unit" on page 152.

3.10.5.8 Precautions for handling and use

Spills and leaks:

Any further spillage or leakage must be prevented. Smaller spills must be bonded with dry sand, dirt and vermiculite. The use of flammable materials is prohibited. If possible, neutralize acids with sodium bicarbonate, chalk, etc. Acid-resistant clothing, shoes, gloves and face protection must be worn. The disposal of unneutralized acid in the sewage system is prohibited!

Waste disposal:

Used batteries must be disposed of in an environmentally friendly recycling process.

Neutralized mud must be stored in closed containers and stored/disposed of in accordance with applicable regulations. After neutralization and testing, larger spills diluted with water must be disposed of in accordance with applicable regulations.

Handling and storage:

- Batteries must be kept in cool, dry and well ventilated rooms with impermeable surfaces and appropriate containment conditions in case of leakage.
- Batteries must be protected from adverse weather conditions and separated from incompatible materials during storage and transport.
- A sufficient supply of water must be located nearby.
- Damage to containers where batteries are stored and transported must be prevented.
- Keep away from fire, sparks and excessive heat.

3.10.6 5CAUPS.xxxx-01

3.10.6.1 General information

The UPS connection cable establishes the connection between the UPS interface option and the battery unit.

3.10.6.2 Order data

Model number	Short description	Figure
	Uninterruptible power supplies	
5CAUPS.0005-01	UPS cable 0.5 m; for 5AC901.IUPS-00 and 5AC901.IUPS-01 UPS	
5CAUPS.0010-01	UPS cable 1 m; for 5AC901.IUPS-00 and 5AC901.IUPS-01 UPS	
5CAUPS.0030-01	UPS cable 3 m; for 5AC901.IUPS-00 and 5AC901.IUPS-01 UPS	

Table 130: 5CAUPS.0005-01, 5CAUPS.0010-01, 5CAUPS.0030-01 - Order data

3.10.6.3 Technical data

Product ID	5CAUPS.0005-01	5CAUPS.0010-01	5CAUPS.0030-01
General information			
Certification			
CE		Yes	
cULus		Yes	
cULus HazLoc Class 1 Division 2		Yes [1]	
GOST-R		Yes	
Cable structure			
Wire cross section		2x 0.5 mm² (AWG 20) 2x 2.5 mm² (AWG 13)	
Conductor resistance		At 0.5 mm² max. 39 Ω/km At 2.5 mm² max. 7.98 Ω/km [2]	
Outer sheathing			
Material		Thermoplastic PVC-based material	
Color		Window gray (similar to RAL 7040)	
Connector			
Type		Screw clamp, 4-pin [3]	
Electrical characteristics			
Operating voltage		Max. 30 VDC	
Peak operating voltage		Typ. 30 VDC	
Test voltage			
Wire/Wire		1500 V	
Current load		10 A at 20°C	
Environmental conditions			
Temperature			
Moving		-5 to 70°C	
Static		-30 to 70°C	
Mechanical characteristics			
Dimensions			
Length	0.5 m	1 m	3 m
Diameter		7 mm	
Flex radius			
Moving		10x wire cross section	
Fixed installation		5x wire cross section	
Weight	Approx. 55 g	Approx. 100 g	Approx. 250 g

Table 131: 5CAUPS.0005-01, 5CAUPS.0010-01, 5CAUPS.0030-01 - Technical data

1) Yes, although applies only if all components installed within the complete system have this certification
2) At an ambient temperature of 20°C.
3) Tightening torque: min. 0.4 Nm; max. 0.5 Nm

Information:

The maximum length of the UPS connection cable depends on:

- **Power**
- **Voltage drop**
- **Wire cross section**
- **Sensor lines**

3.10.6.4 Installation

For information about connecting the cable to the battery unit, please see the section "Installing and connecting the UPS battery unit" on page 152.

3.11 Power supply

3.11.1 5AC902.PS00-00

3.11.1.1 General information

The AC power supply for the Panel PC can optionally be expanded to allow operation with 100~240 VAC.

3.11.1.2 Order data

Model number	Short description	Figure
	Power supply	
5AC902.PS00-00	PPC900 power supply 85-264 VAC	
	Required accessories	
	Terminal blocks	
0TB3103.8000	Connector, 230 VAC, 3-pin female, 4 mm² screw clamp, protected against vibration by the screw flange	

Table 132: 5AC902.PS00-00 - Order data

3.11.1.3 Technical data

Product ID	5AC902.PS00-00
General information	
Power button	Yes
Certification	
CE	Yes
cULus	Yes
cULus HazLoc Class 1 Division 2	Yes [1]
GOST-R	Yes
Input	
Nominal input voltage	100 to 240 VAC
Frequency	45 to 65 Hz
Starting current	< 20 A (cold restart, 100% load and 100 VAC)
Power failure bypass	> 10 ms (100 VAC and 230 VAC)
Internal fuse	Yes
Output	
Nominal voltage	24 VDC ±10%
Output current	
0 to 55°C	5.5 A [2]
Mechanical characteristics	
Housing	
Material	Sheet metal
Paint	Anthracite
Dimensions	
Width	73.5 mm
Height	225.5 mm
Depth	53.5 mm
Weight	580 g

Table 133: 5AC902.PS00-00 - Technical data

1) Yes, although applies only if all components installed within the complete system have this certification
2) At an ambient temperature of 0 to 55°C and nominal voltage.

3.11.1.4 Installation

For information about installing the power supply, please refer to the section "Installing or replacing the AC power supply" on page 135.

Chapter 3 • Commissioning

1 Installation

Danger!

- **All supply voltage must be disconnected before removing device covers or components or removing/installing accessories, hardware or cables.**
- **The power cable must be disconnected from the device and from the voltage supply.**
- **Before the device can be connected to the power supply and turned on, all covers, components, accessories, hardware and cables must be installed or attached.**

1.1 Installation Panel PC

The Panel PC 900 is mounted in the cutout using retaining clips. The number of retaining clips depends on the display unit.

Installation notes

- Environmental conditions must be taken into consideration.
- When installed in an enclosed housing, enough space must be available for air to circulate sufficiently.
- This device must be mounted to a flat, clean and burr-free surface.
- This device is only certified for operation in closed rooms.
- This device must not be subjected to direct sunlight.
- Ventilation holes must not be covered.
- This device must be mounted in one of the approved orientations.
- The wall or control cabinet must be able to withstand four times the total weight of the device.
- The flex radius of connected cables (DVI, SDL, USB, etc.) must not be exceeded.
- This device must be mounted in a position that minimizes glare on the screen.
- This device must be mounted in a position and orientation that make viewing as easy as possible for the operator.

The thickness of the wall or cabinet plate must be between 1 mm and 6 mm.

A hex-head screwdriver is needed to tighten and loosen the screws on the retaining clips. The maximum torque for the retaining clips is 1 Nm.

Devices must be installed on flat, clean and burr-free surface; uneven areas can cause damage to the display when the screws are tightened or intrusion of dust and water.

Information:

Sufficient clearance must be available on the sides of the Panel PC 900 (A, B and C in der image below) to allow unrestricted operation and maintenance of the back of the PPC. This clearance depends on the configuration of the Panel PC 900 as well as how it affects operating and service personnel.

- **The clearance indicated by the letter "A" is necessary to replace the fan kit and fan filter.**
- **The clearance indicated by the letter "B" is necessary to access the LED status indicators, the power and reset buttons, the CFast slot, the slide-in compact drive and the slide-in DVD drive.**
- **The clearance indicated by the letter "C" is necessary to connect and disconnect cables as well as to ensure that the maximum flex radius of cables is not exceeded.**

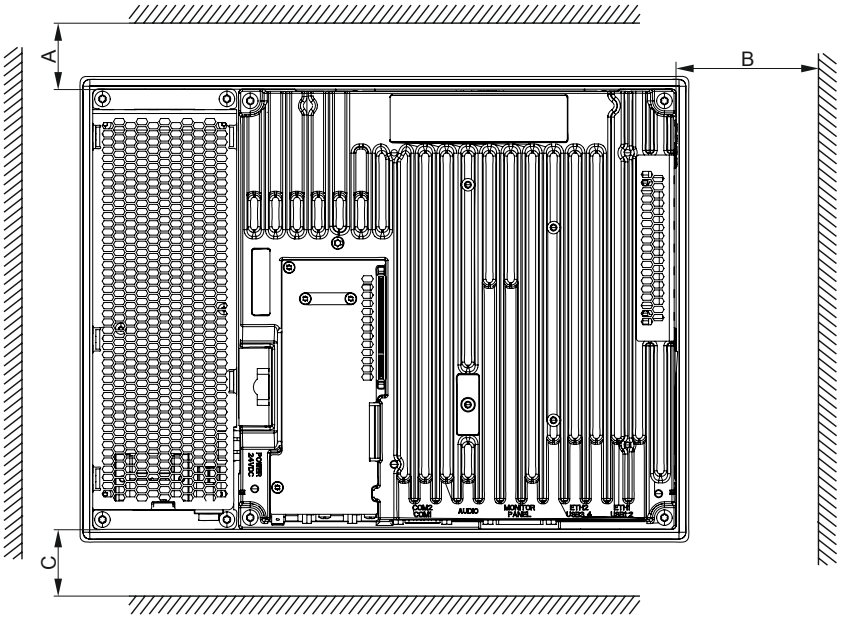

Procedure

1. Check whether the included mounting screws are screwed into the retaining clips. If not, then the mounting screws must be screwed into the retaining clips with a hex-head screwdriver. The mounting screws must only be screwed in far enough that they no longer protrude above the retaining clip.

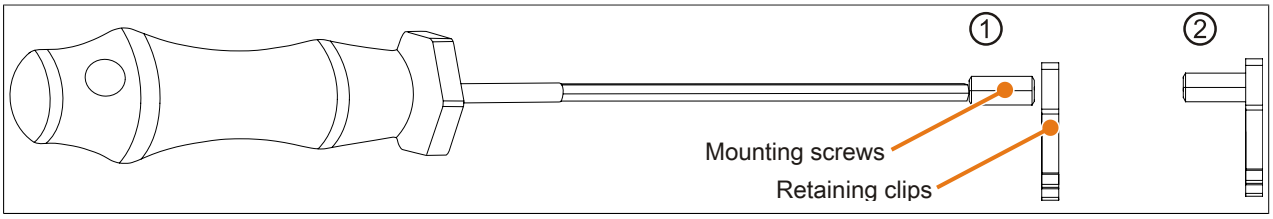

Figure 53: Prepare retaining clips

2. Insert the device into the front side of the smooth, flat installation cutout. The dimensions for the cutout can be found under "Installation diagrams" on page 22.

3. Install the retaining clips on the device. To do this, insert the clips into the openings on the sides of the device (indicated by orange circles). The number of retaining clips may vary depending on the display unit. The exact number can be found in Table 7 "Display units - Installation diagrams" on page 22.

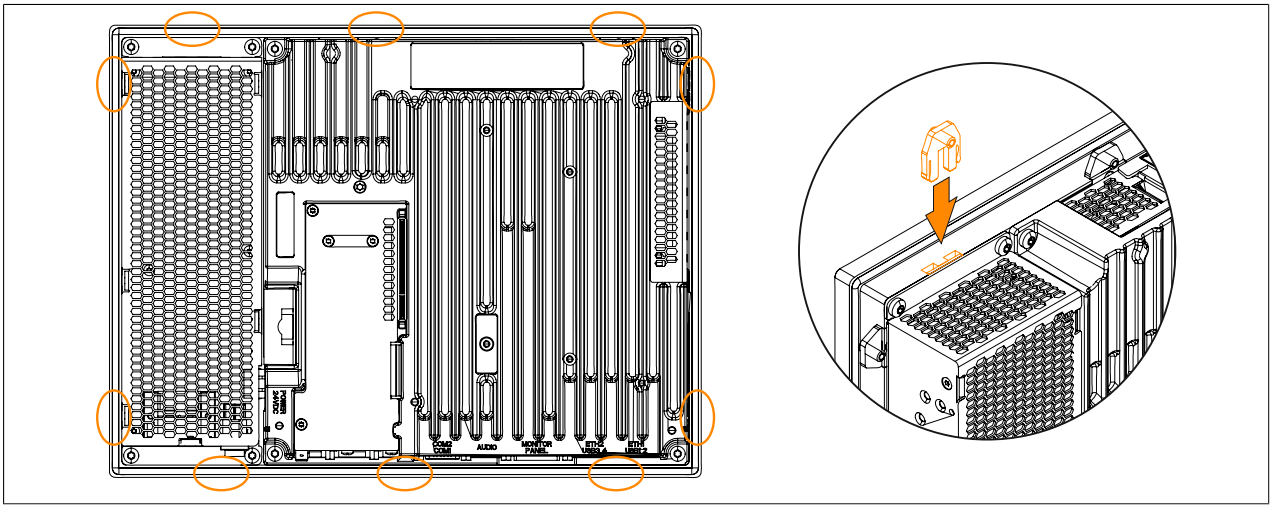

Figure 54: Inserting the retaining clips

4. Now fasten the retaining clips to the wall or control cabinet by alternately tightening the screws with a hex-head screwdriver. The tightening torque should be max. 1 Nm to provide an optimal seal.

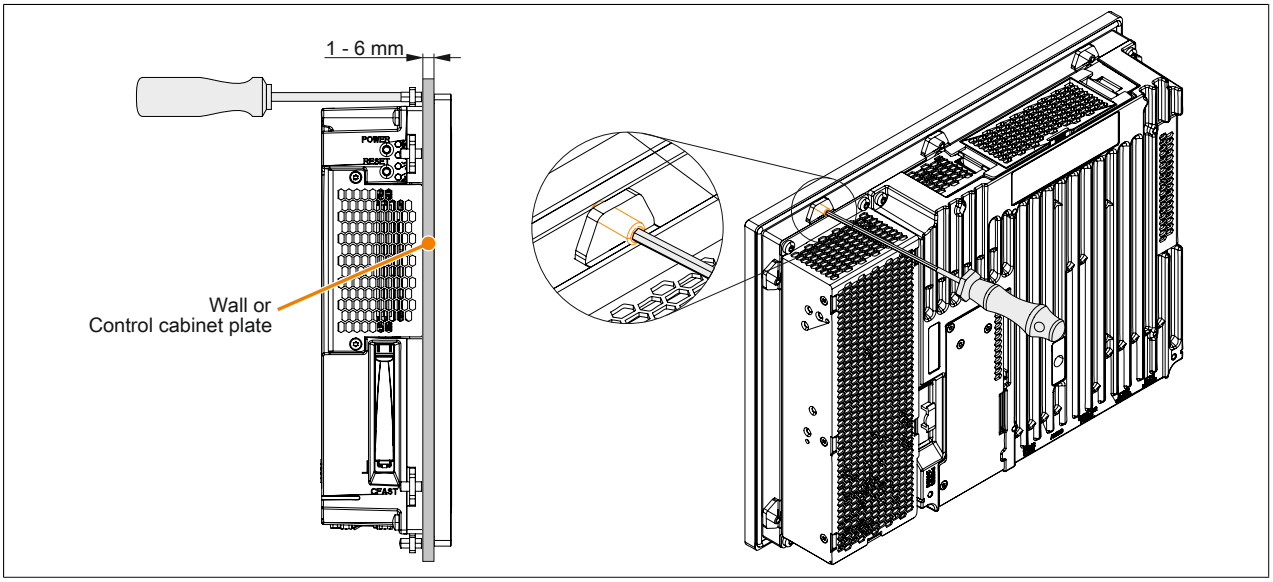

Figure 55: Fasten retaining clips

1.2 Installation information for individual components

Information:

If the Panel PC 900 is not delivered as a complete system but as individual components (or individual components are installed afterward), then these components must be enabled in BIOS. To do this, open BIOS when booting the system, load the default BIOS values and then save the settings. For additional information, see "Save & Exit" on page 221. This is required for the following individual components:

- **CPU board and system unit**
- **Interface option**
- **Fan kit**
- **Bus unit**

1.3 Replacing the CPU board and system unit

1. Disconnect the power supply to the B&R industrial PC (unplug the power cable!). Isolate from all potential sources of electrical power!
2. Touch the housing or ground connection in order to discharge any electrostatic charge from your body.

> **Information:**
>
> **If a bus unit is mounted on the Panel PC it must first be removed.**

3. Remove the 4 Torx screws (T20) and 2 Torx screws (T10) shown in the following image.

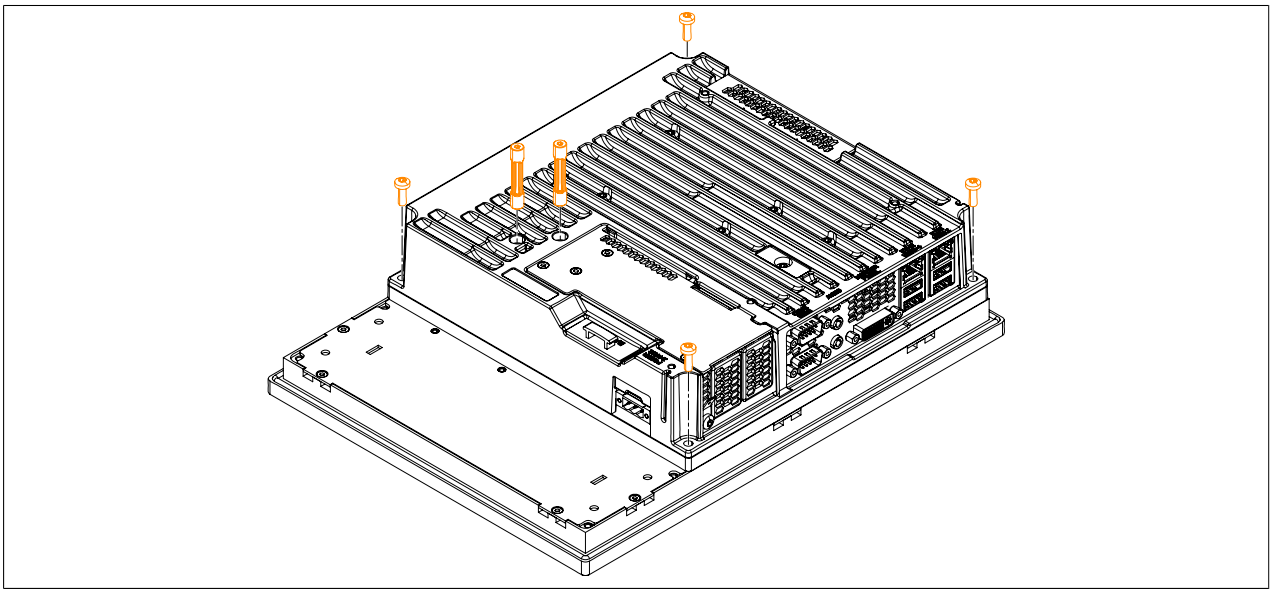

Figure 56: Removing the Torx screws on the system unit

4. Remove the system unit with the installed CPU board.

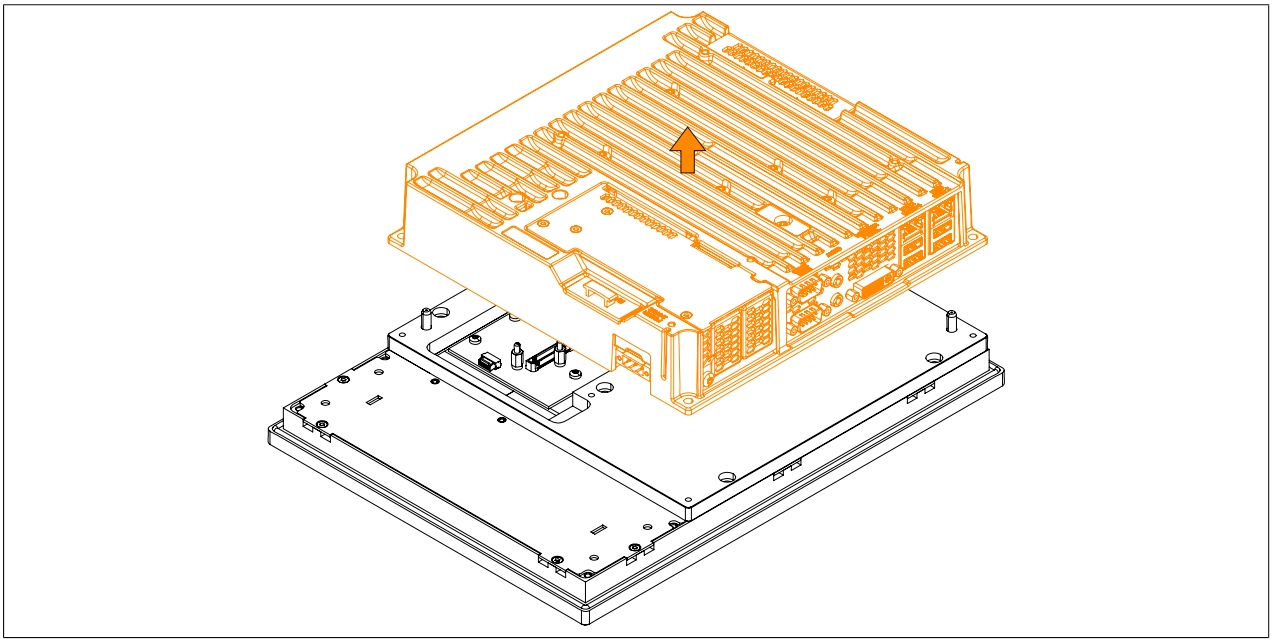

Figure 57: Removing the system unit and CPU board

5. A different system unit with a preinstalled CPU board can now be installed on the display unit. Installation takes place in reverse order. The max. tightening torque is 0.5 Nm for the T10 Torx screws and 1.2 Nm for the T20 Torx screws.
   It is very important that the system unit is installed correctly. The connector for the display interface must be carefully connected to the female connector on the display unit.

6. If the Panel PC 900 is converted to an Automation Panel 9x3, then the mounting plate must also be removed. To do so, remove the 5 Torx screws (T20) indicated below.

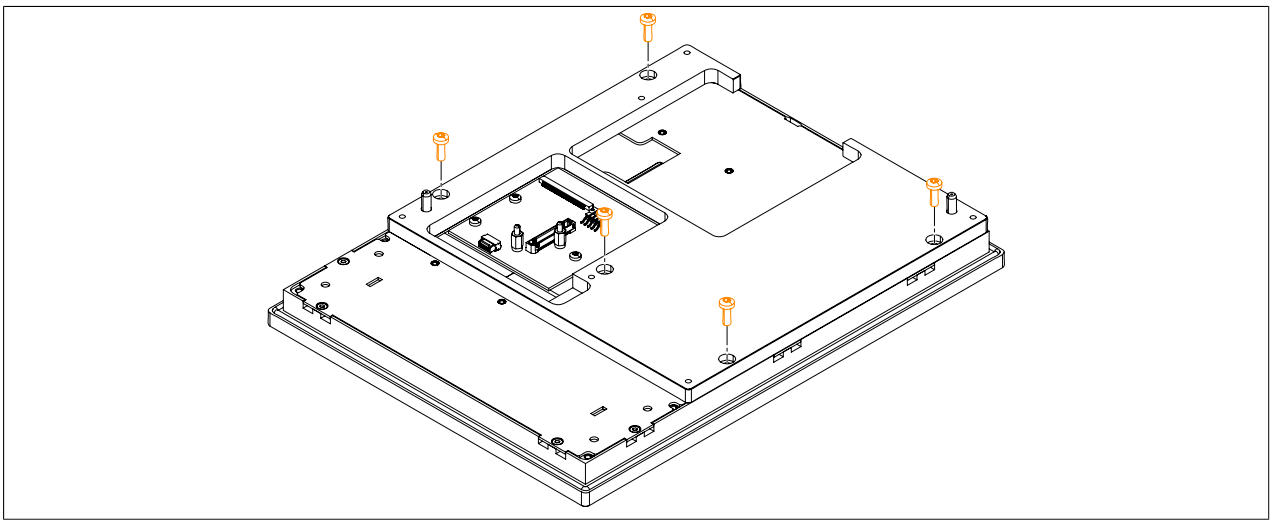

Figure 58: Removing the Torx screws on the mounting plate

7. Remove the mounting plate from the display unit.

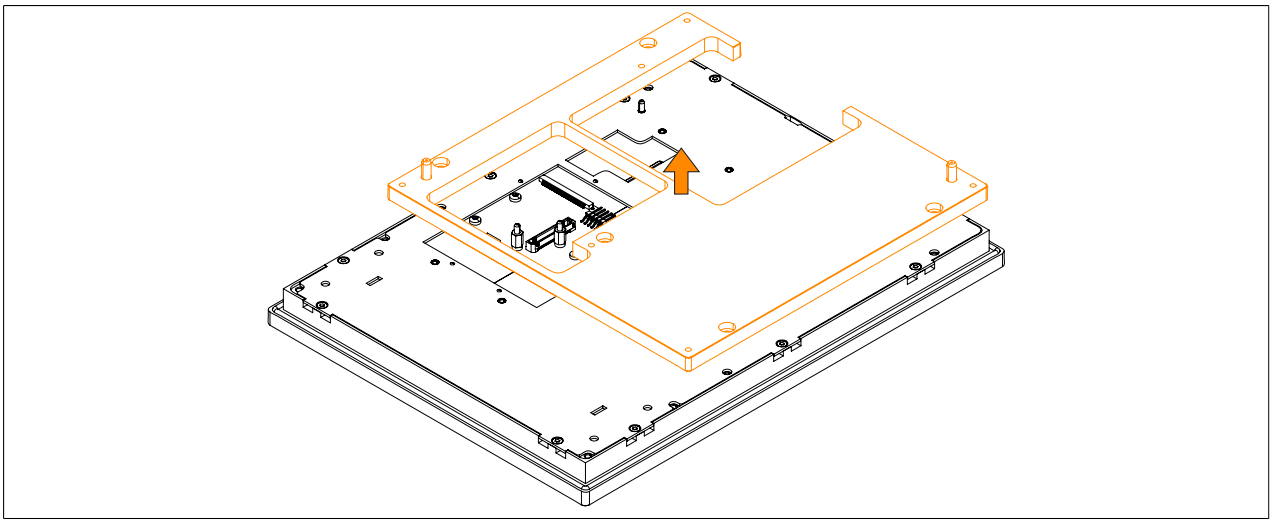

Figure 59: Removing the mounting plate

8. The mounting plate is installed by following this instructions in reverse; the max. tightening torque is 1.2 Nm. It is very important that the mounting plate is installed correctly.

1.4 Installing or replacing the AC power supply

1. The on/off switch must be set to position "0" (off). Disconnect the power supply to the B&R industrial PC (unplug the power cable!). Isolate from all potential sources of electrical power!
2. Touch the housing or ground connection in order to discharge any electrostatic charge from your body.
3. Remove the Panel PC from the control cabinet. To do so, follow the steps in section "Installation Panel PC" on page 130 in reverse order.
4. Place the Panel PC on a clean, flat surface.
5. Remove the Torx screws (T20) indicated in the following image.

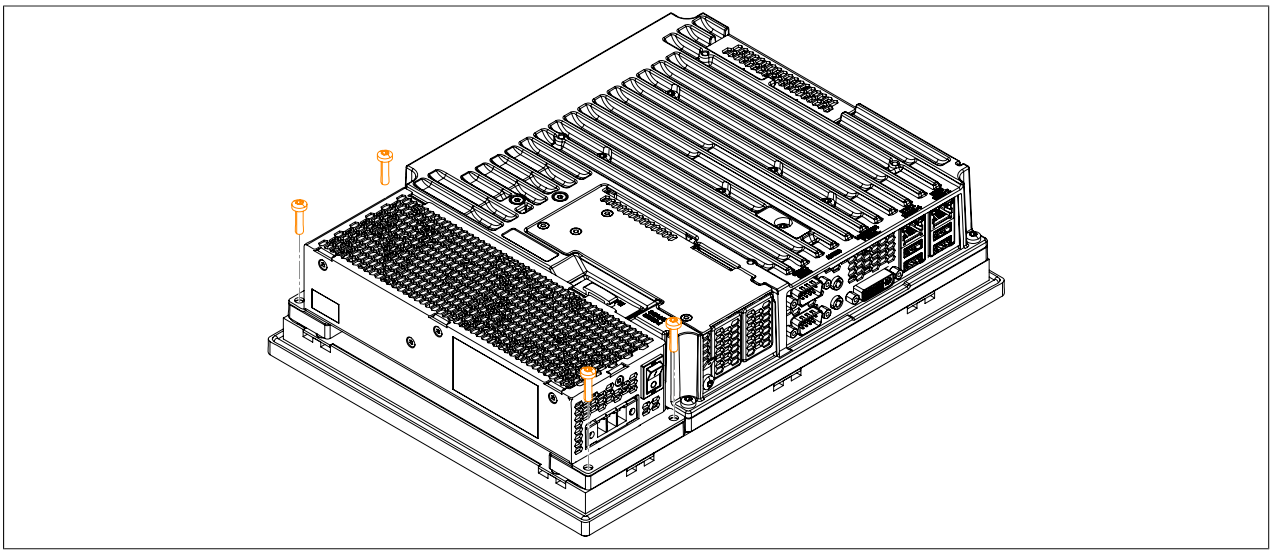

Figure 60: Removing the screws

6. The AC power supply can now be removed parallel to the Panel PC in the direction indicated by the arrows in the image below. Exercise caution to prevent damage to the power supply connector.

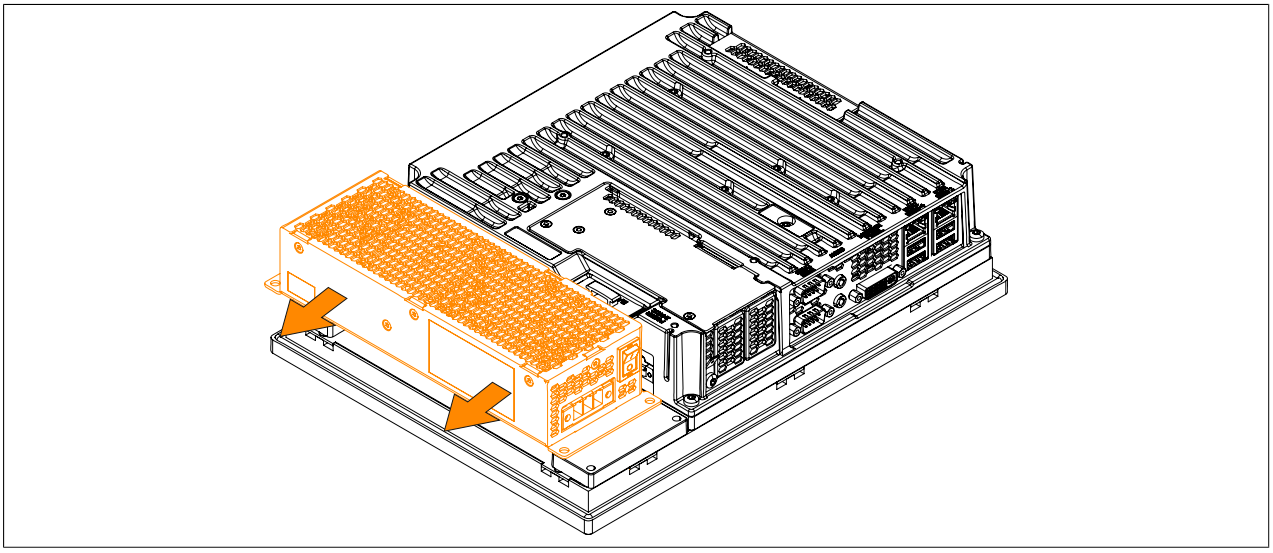

Figure 61: Replacing the AC power supply

7. If the AC power supply is being installed for the first time (i.e. not a replacement), then both mounting plates must be installed first. To do so, guide the mounting plates into each of the three slots at a slight angle. These mounting plates are included in the delivery of the AC power supply.

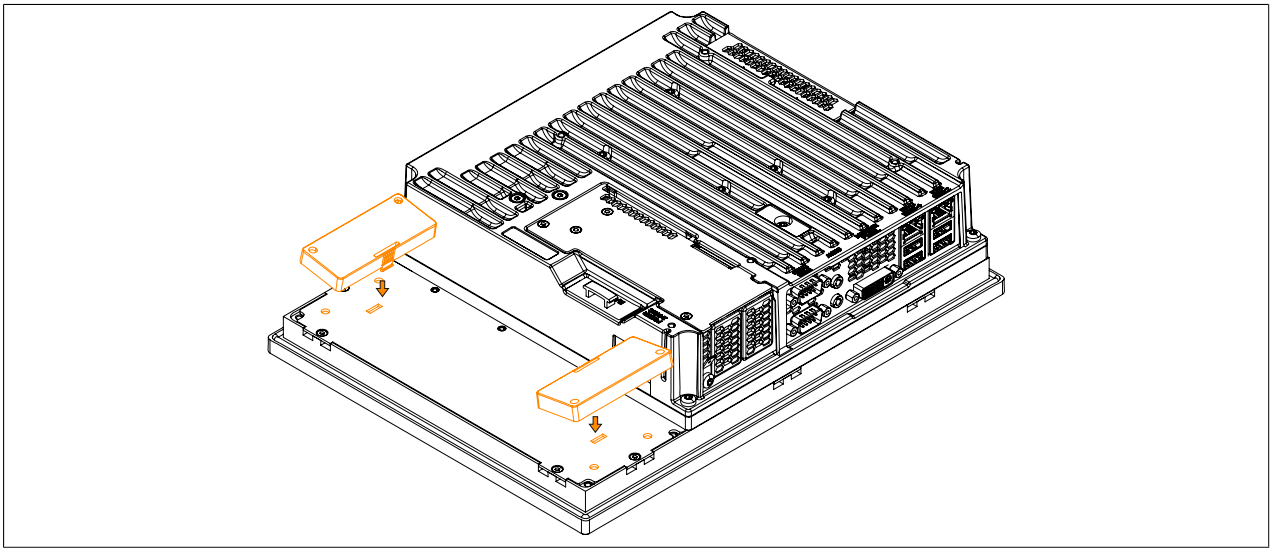

Figure 62: Installing the mounting plates

8. To install an AC power supply on the Panel PC, it must be aligned parallel to the Panel PC. Plug the power supply connector into the female connector on the Panel PC.
9. Then the AC power supply can be fastened with the 4 Torx screws (T20) (max. tightening torque 1.2 Nm). It is important that it is aligned parallel to the housing. The power supply connector must click into place in the female connector on the Panel PC. There must not be any pressure or mechanical strain on the connector.

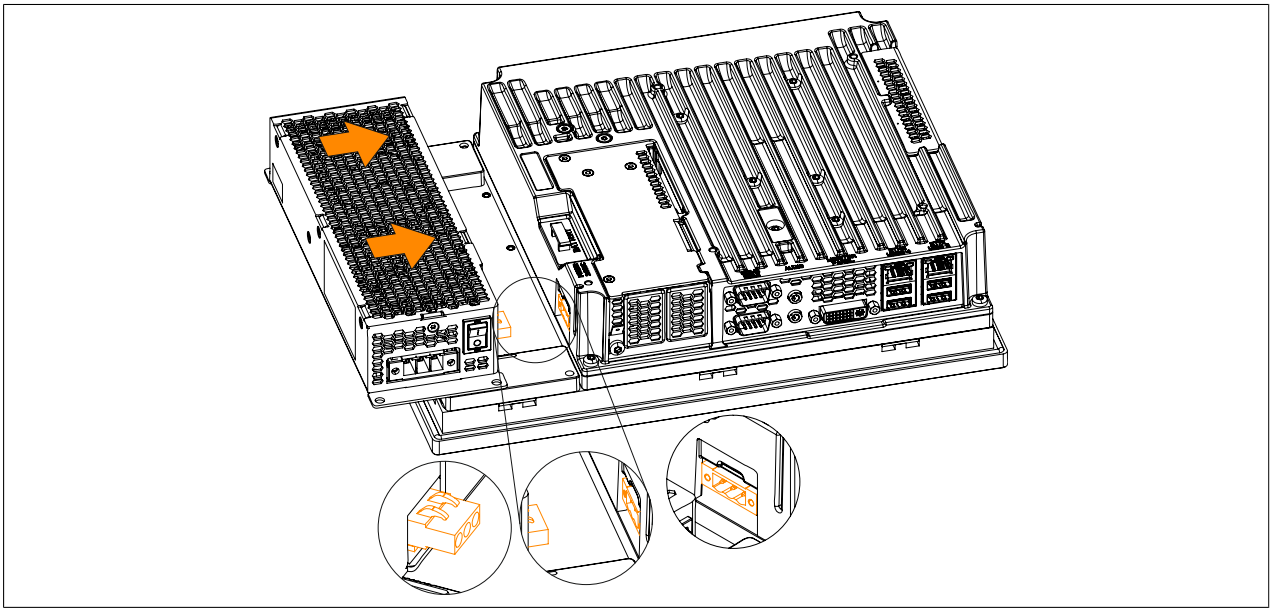

Figure 63: Installing the AC power supply

10. The Panel PC can now be installed back in the control cabinet, see section "Installation Panel PC" on page 130.

1.5 Replacing the main memory modules

Information:

The Panel PC has 2 slots for main memory modules. Only the following B&R main memory modules are permitted:

- **5MMDDR.1024-03, 5MMDDR.2048-03, 5MMDDR.4096-03, 5MMDDR.8192-03**

1. Disconnect the power supply to the B&R industrial PC (unplug the power cable!). Isolate from all potential sources of electrical power!
2. Discharge any electrostatic charge on the ground connection.
3. Remove the Panel PC from the control cabinet. To do so, follow the steps in section "Installation Panel PC" on page 130 in reverse order.
4. Place the Panel PC on a clean, flat surface.
5. Remove the Torx screws (T10) indicated in the following image.

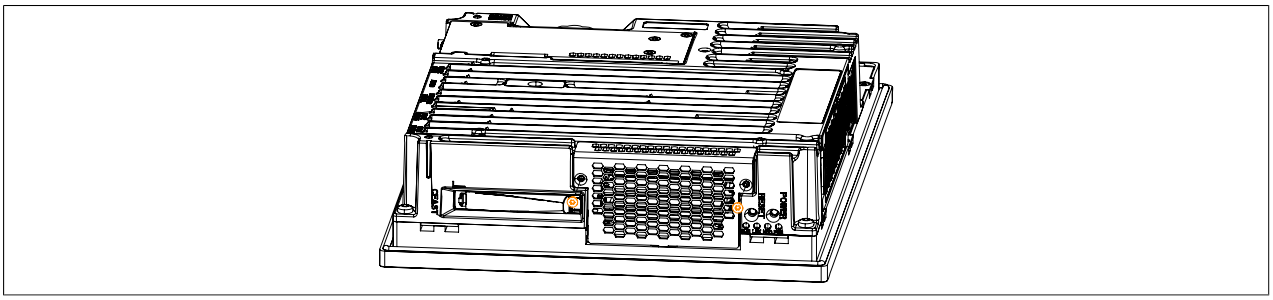

Figure 64: Removing the Torx screws

6. Tilt the cover plate forward and remove it by sliding it upward.

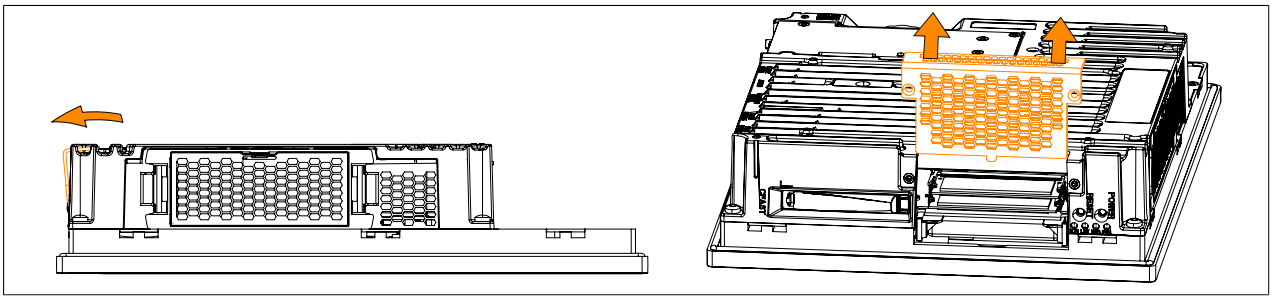

Figure 65: Removing the cover plate

Information:

The lower main memory module can only be replaced after the top one has been removed.

7. The main memory modules can now be replaced. To do so, carefully press the fastening clamps outward and pull out the main memory module.

8. If inserting a new main memory module, align the notch on the connector side of the memory module with the notch above the slot. The main memory module can now be carefully pressed into the slot until the fastening clamps are engaged.

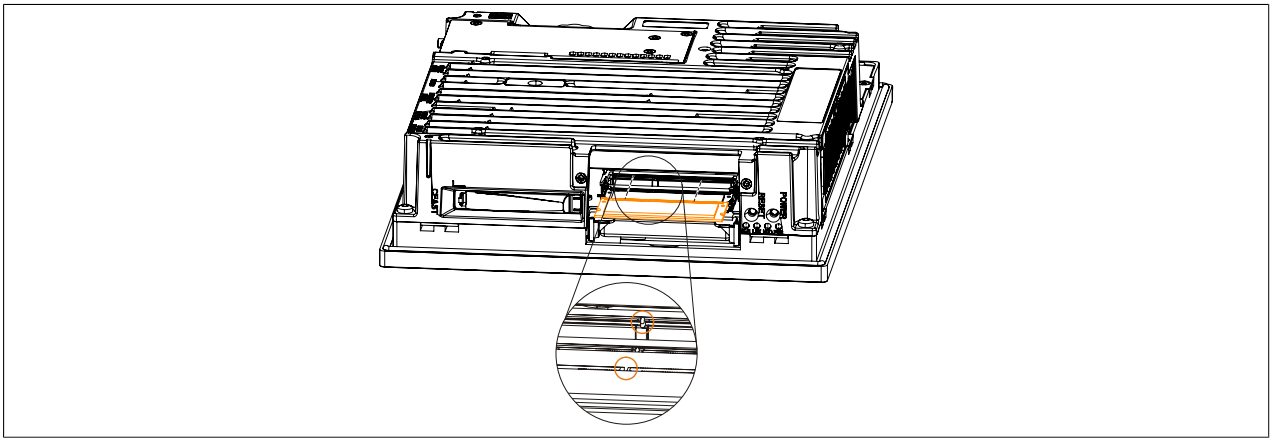

Figure 66: Replacing the main memory modules

Caution!

If only one main memory module is to be used, it must be installed in RAM slot 2.

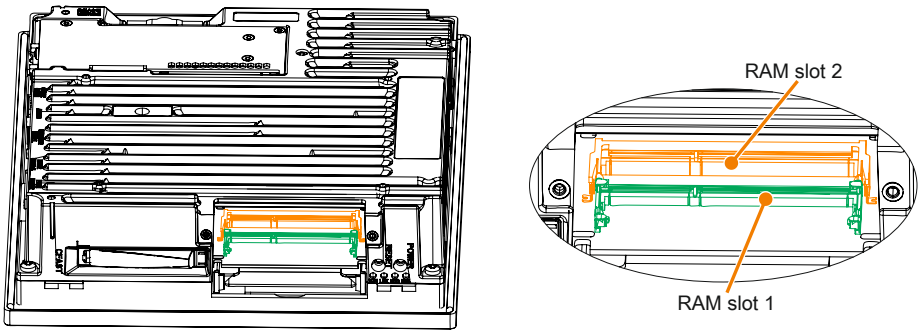

9. The cover plate can now be replaced by following these steps in reverse order. The maximum tightening torque of the Torx screws (T10) is 0.5 Nm.
10. The Panel PC can now be installed back in the control cabinet, see section "Installation Panel PC" on page 130.

1.6 Installing the interface option

Information:

Please note that not every interface option can be installed in interface slots 1 and 2. For more information, see "IF option 1 slot" on page 53 and "IF option 2 slot" on page 53.

1. Disconnect the power supply to the B&R industrial PC (unplug the power cable!). Isolate from all potential sources of electrical power!
2. Touch the housing or ground connection in order to discharge any electrostatic charge from your body.

Information:

If a bus unit is mounted on the Panel PC it must first be removed.

3. Remove the Torx screws (T10) indicated by ① in the following image. The Torx screws indicated by ② only need to be removed if an IF option is already mounted.

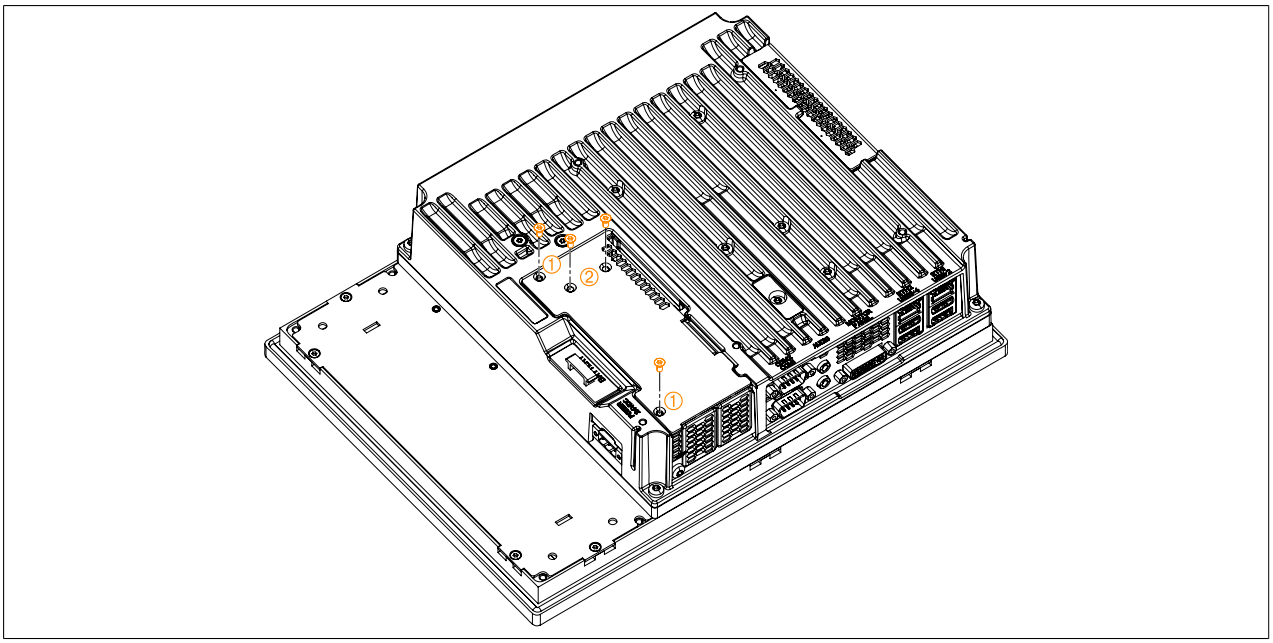

Figure 67: Removing the Torx screws from cover plate

4. Lift the cover plate up and away to remove it.

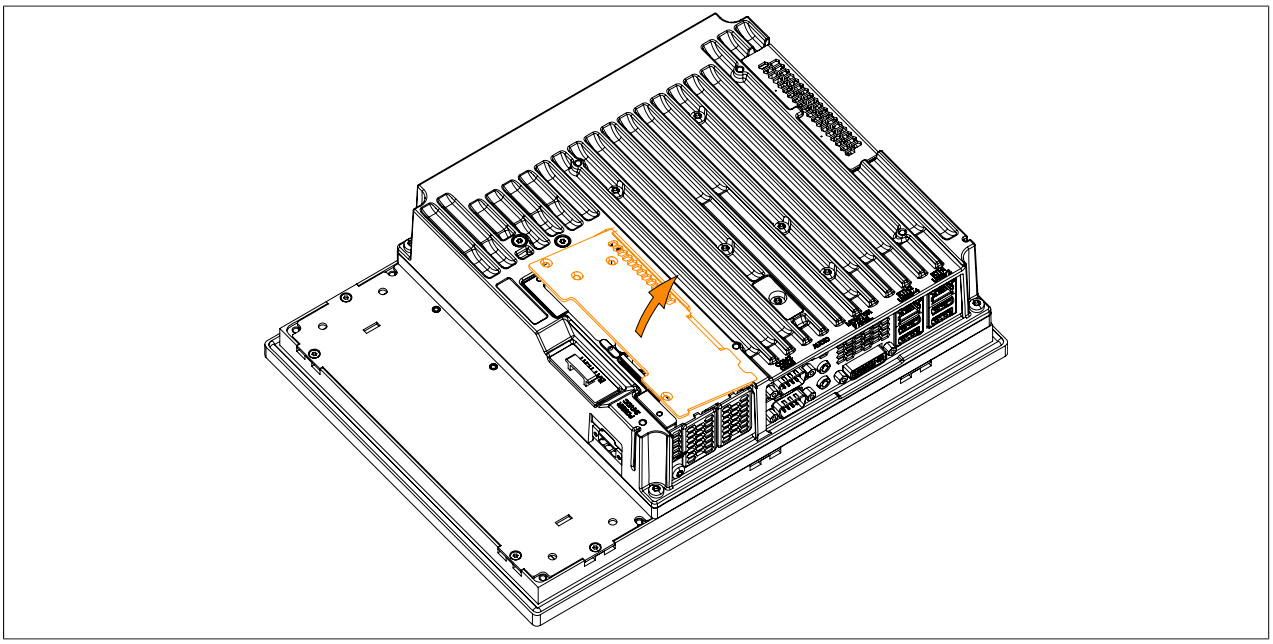

Figure 68: Removing the cover plate

5. Remove the cover plate by sliding it upwards and also remove the installed IF option.

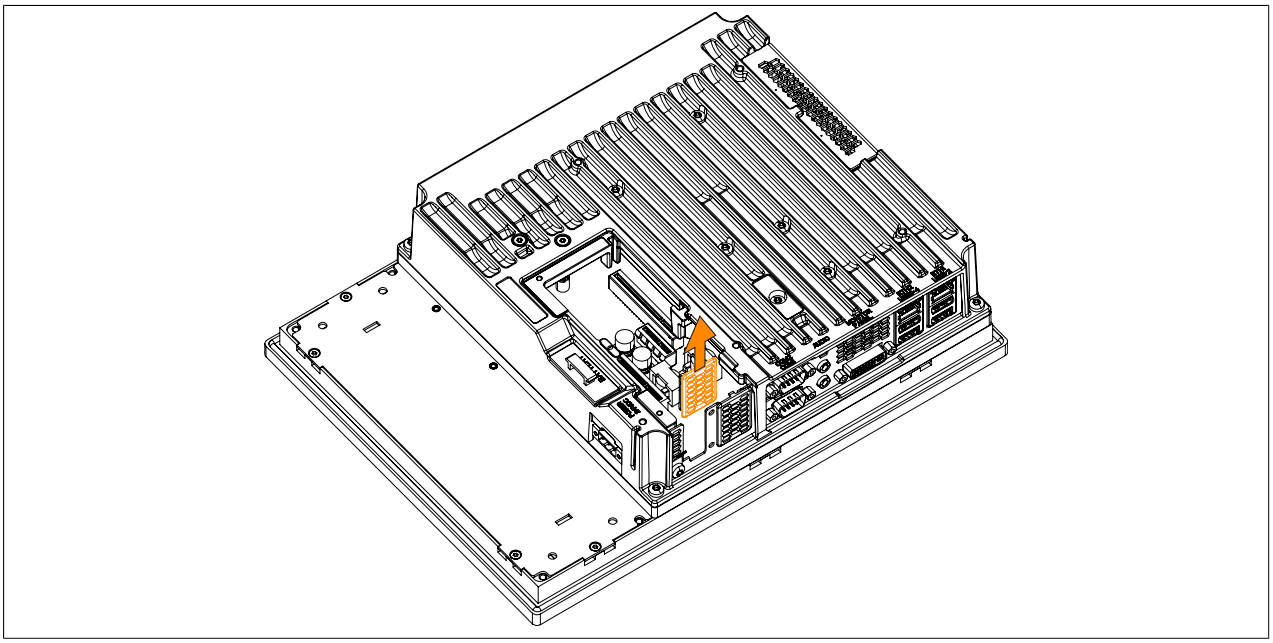

Figure 69: Removing the Torx screws and slot cover

6. Insert the interface option in the slot and fasten it to the Panel PC (max. tightening torque 0.5 Nm) with 2 torx screws (T10).

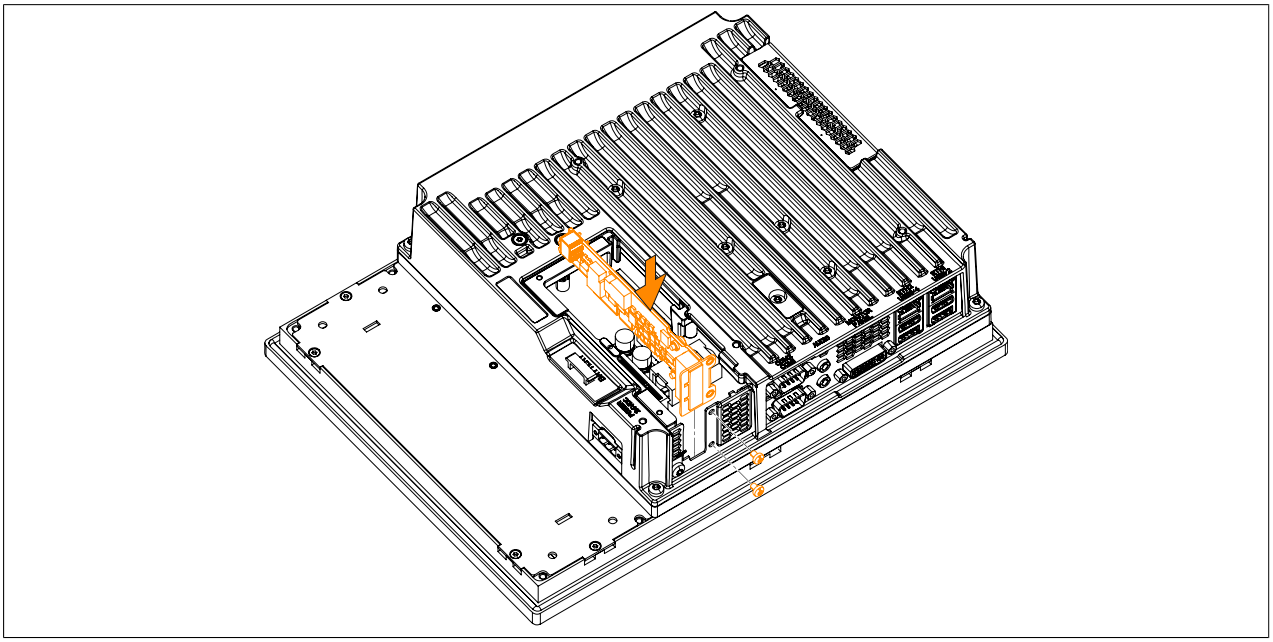

Figure 70: Inserting and fastening the IF option

7. Replace the cover plate.

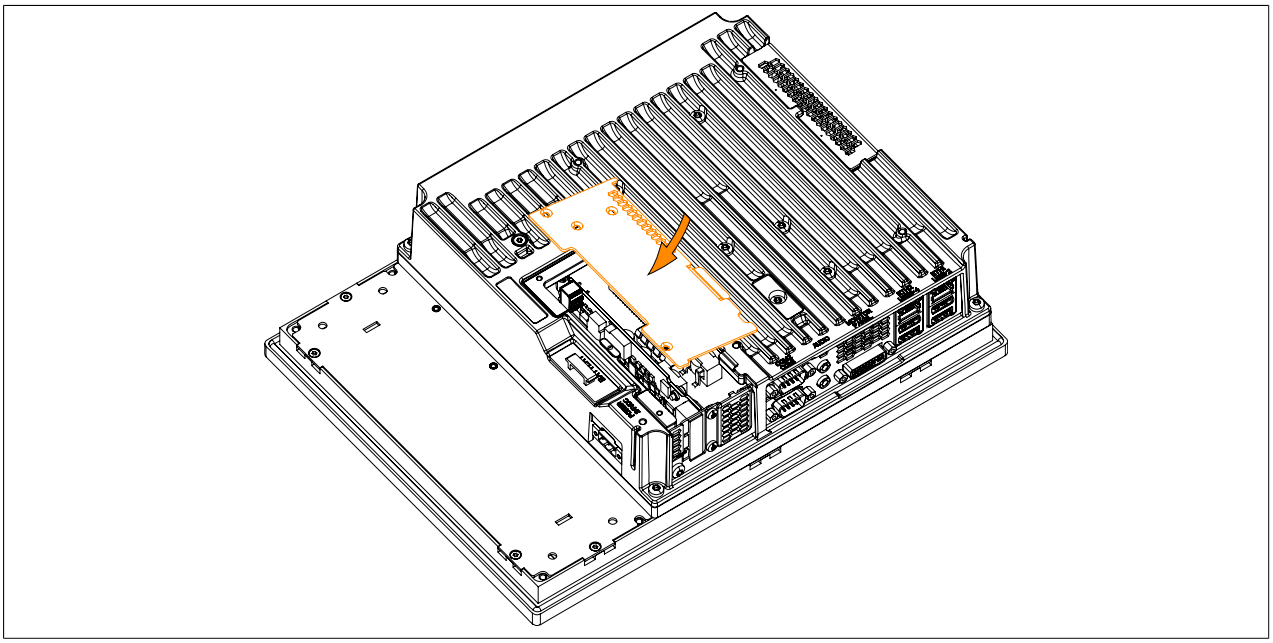

Figure 71: Replacing the cover plate

8. Secure the cover plate to the B&R industrial PC using the same Torx screws (T10) from before. The Torx screws indicated by ② only need to be tightened if an IF option is mounted (max. tightening torque 0.5 Nm).

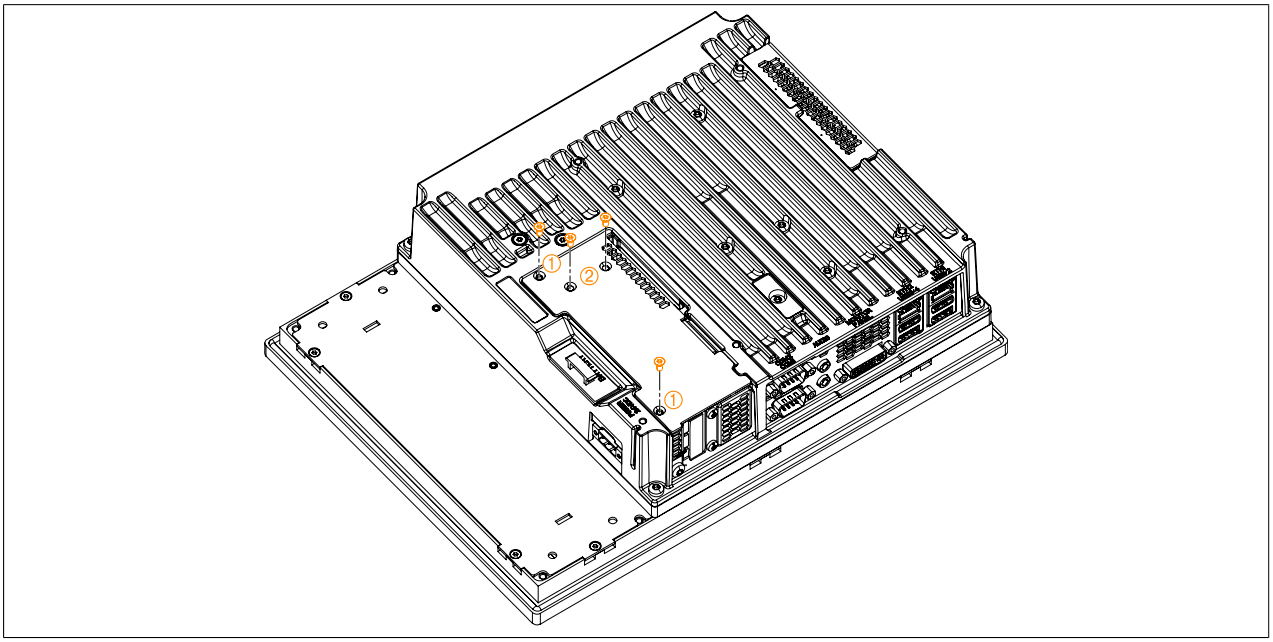

Figure 72: Fastening the cover plate with the Torx screws

9. This option must be enabled in BIOS after the interface has been installed successfully. To do this, open BIOS when booting the system, load the default BIOS values and then save the settings. For additional information, see "Save & Exit" on page 221.

1.7 Installing and replacing the slide-in compact drive

Information:

The slide-in compact drive can only be replaced without removing the PPC from the control cabinet if the wall is less than 5.5 mm thick. Steps 3, 4 and 11 are only necessary if the Panel PC is removed from the cabinet.

1. Disconnect the power supply to the B&R industrial PC (unplug the power cable!). Isolate from all potential sources of electrical power!
2. Touch the housing or ground connection in order to discharge any electrostatic charge from your body.
3. Remove the Panel PC from the control cabinet. To do so, follow the steps in section "Installation Panel PC" on page 130 in reverse order.
4. Place the Panel PC on a clean, flat surface.
5. Remove the Torx screws (T10) indicated in the following image.

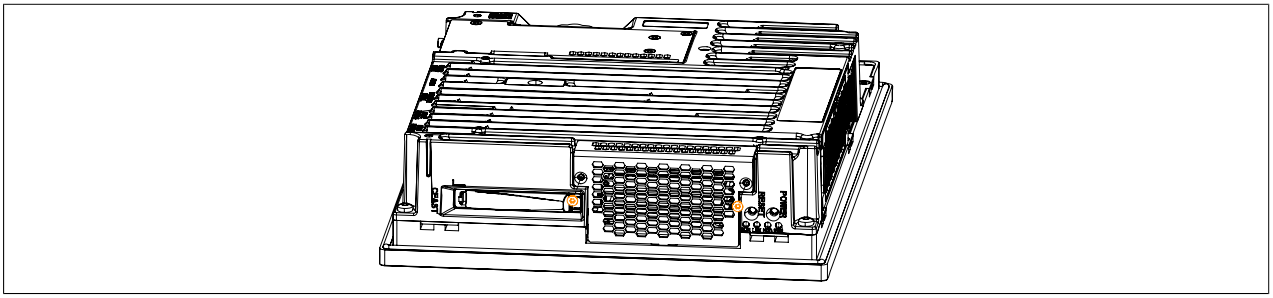

Figure 73: Removing the Torx screws

6. Tilt the cover plate forward and remove it by sliding it upward.

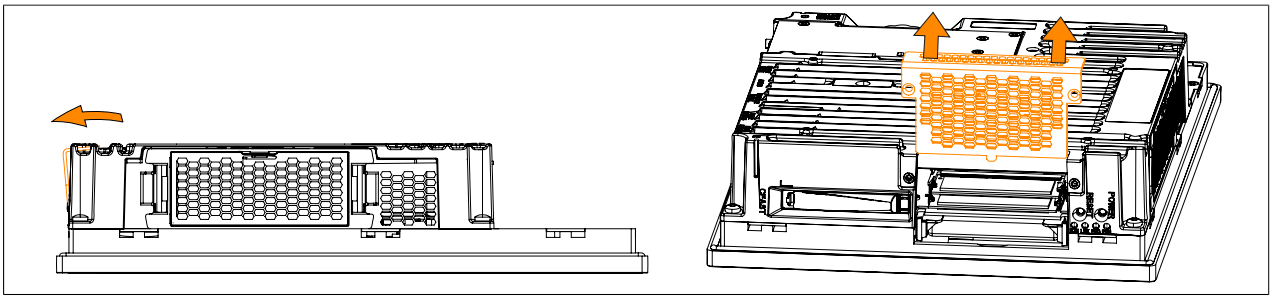

Figure 74: Removing the cover plate

7. Free the plastic removal strip fastened to the side of the slide-in compact drive.

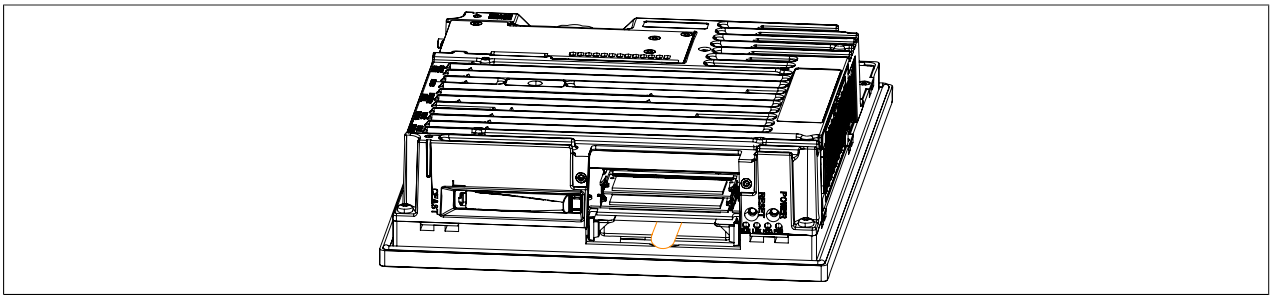

Figure 75: Freeing the removal strip on the slide-in compact drive

8. Pull firmly on the removal strip to remove the slide-in compact drive.

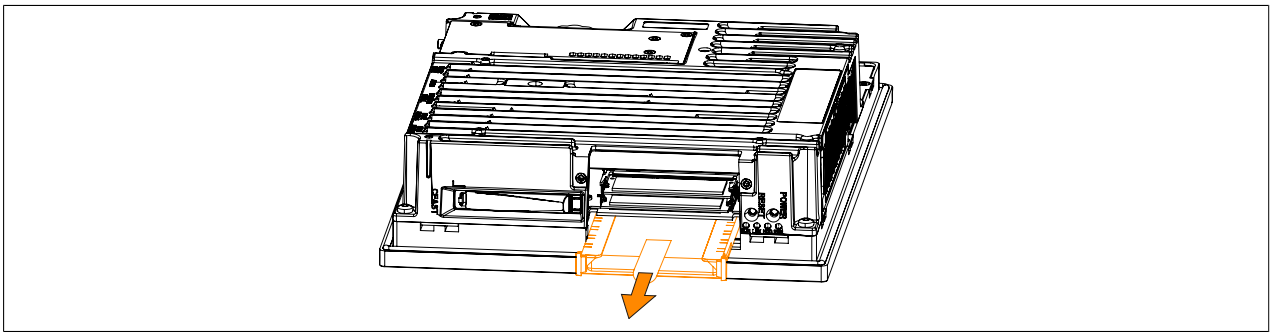

Figure 76: Removing the slide-in compact drive

9. When inserting a slide-in compact drive, be sure to align it with the guide rails. Tuck the removal strip back between the drive and the frame (as it was before it was pulled out).
10. The cover plate can now be replaced by following these steps in reverse order.
11. The Panel PC can now be installed back in the control cabinet, see section "Installation Panel PC" on page 130.

1.8 Replacing the fan kit

1. Disconnect the power supply to the B&R industrial PC (unplug the power cable!). Isolate from all potential sources of electrical power!
2. Touch the housing or ground connection in order to discharge any electrostatic charge from your body.
3. Press in the indicated latching mechanisms ① while pulling out the fan kit ② at the same time.

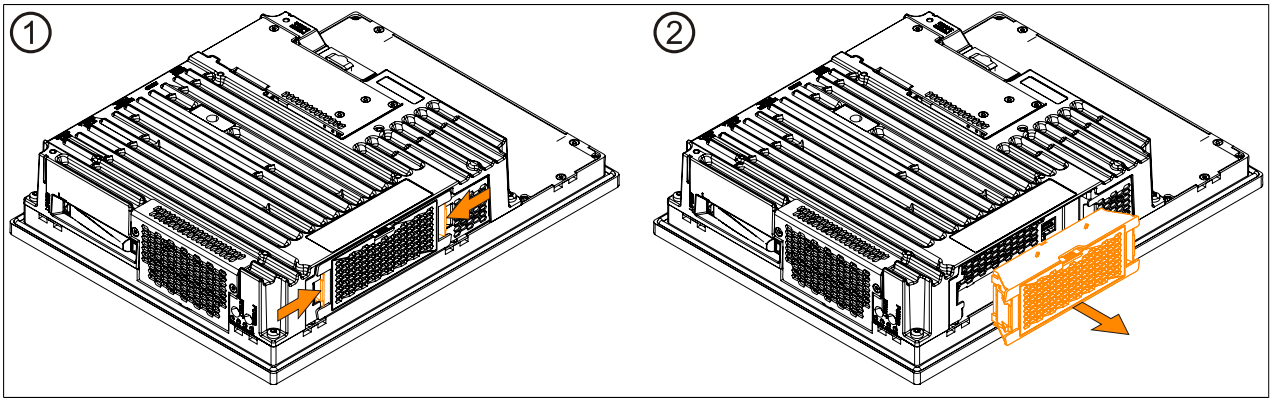

Figure 77: Pressing in the latching mechanism

4. A new fan kit can now be installed. Align the fan kit parallel to the Panel PC and press it in until it latches. Make sure the fan kit is inserted so that the connections match up.
5. If a fan kit is being installed for the first time (i.e. fan kit previously not used in device), then it must still be programmed. To do so, follow the instructions in the "Programming fan kit data" section.
   If a fan kit has been removed from the device and is not being replaced, then its data must be deleted. To do so, follow the instructions in the "Deleting fan kit data" section.

> **Information:**
>
> **If a fan kit has been replaced, then an incorrect serial number will be displayed. To display the correct serial number, the fan kit data must be deleted and reprogrammed.**

6. After the fan kit has been programmed, the BIOS default values must be loaded and the settings saved. For additional information, see "Save & Exit" on page 221.

Programming fan kit data

> **Information:**
>
> **If a fan kit is being installed for the first time (i.e. fan kit previously not used in device), then it must still be programmed.**

1. Boot the B&R industrial PC and type the following on the command line:
   `mtxcsvc i fanfset` Checks whether the fan kit has already been programmed
2. If the fan kit has not yet been programmed, this can be done by typing in the following:
   `mtxcsvc u fanfset "fn"` The path of the file and filename must be specified in place of "fn".

Deleting fan kit data

> **Information:**
>
> **If a fan kit has been removed from the device and is not being replaced, then its data must be deleted.**

1. Boot the B&R industrial PC and type the following on the command line:
   `mtxcsvc i fanfset` Checks whether the fan kit has already been programmed
2. Since a fan kit was already installed, its data must be deleted. This is done by typing the following on the command line:
   `mtxcsvc d fanfset` Deletes the data of the previously installed fan kit

1.9 Replacing the fan filter

1. Disconnect the power supply to the B&R industrial PC (unplug the power cable!). Isolate from all potential sources of electrical power!
2. Touch the housing or ground connection in order to discharge any electrostatic charge from your body.
3. Press down the indicated latching mechanism ① while pulling out the filter cover ② at the same time.

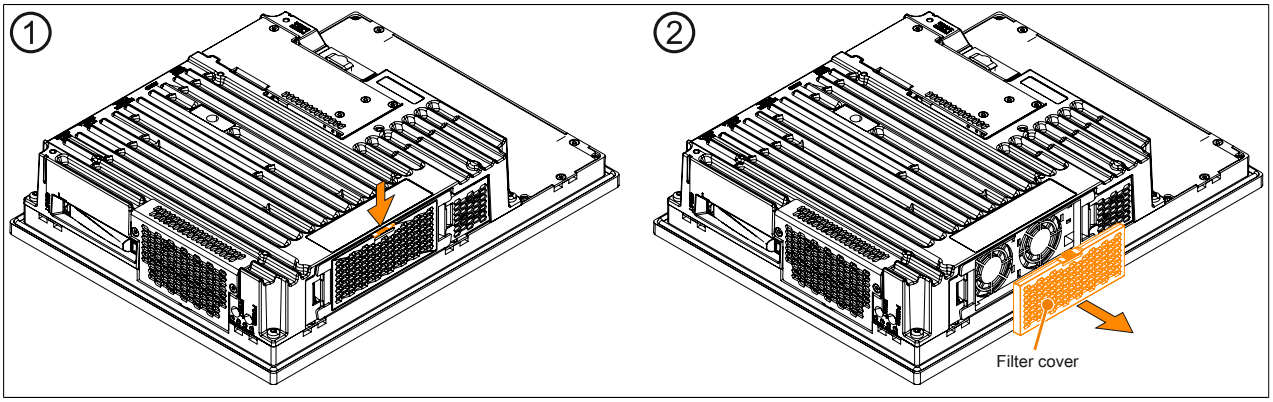

Figure 78: Removing the filter cover

4. Insert the new filter cover into the fan kit by following these instructions in the reverse order.

1.10 Installing the bus unit

Information:

Since the 5AC902.BX02-02 bus unit is supported beginning with firmware version V1.14, a firmware upgrade must be carried out before installation. See "Firmware upgrade" on page 233.

1. Disconnect the power supply to the B&R industrial PC (unplug the power cable!). Isolate from all potential sources of electrical power!
2. Touch the housing or ground connection in order to discharge any electrostatic charge from your body.
3. Remove the Panel PC from the control cabinet. To do so, follow the steps in section "Installation Panel PC" on page 130 in reverse order.
4. Place the Panel PC on a clean, flat surface.
5. Remove the 2 or 4 Torx screws (T10). Slide the cover plate forward to remove it.

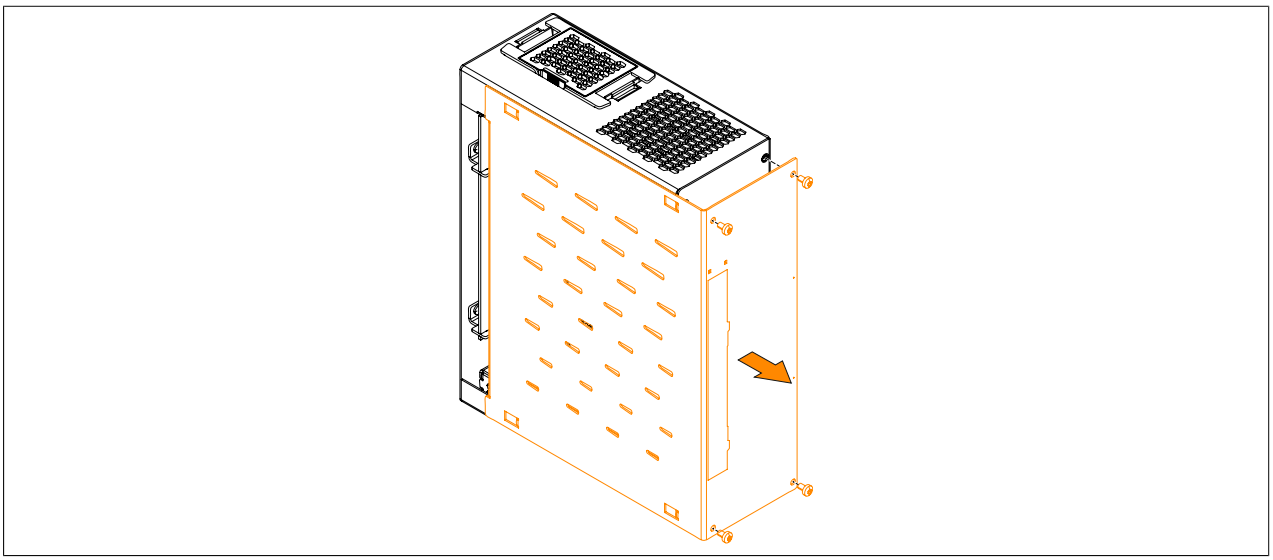

Figure 79: Removing the Torx screws and side cover

6. Install the bus unit on the system unit using 4 Torx screws (T20) included in delivery (tightening torque approx. 1.2 Nm).

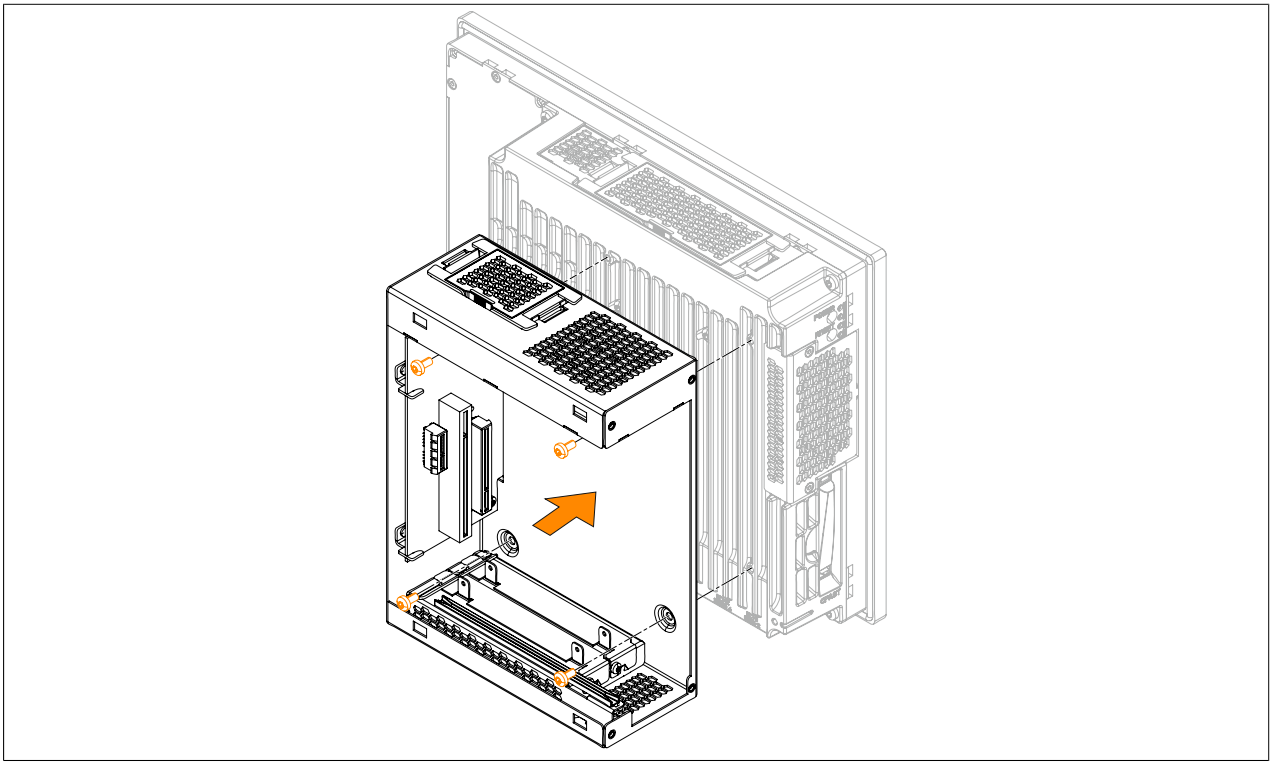

Figure 80: Installing the bus unit on the system unit

7. Install the side cover on the bus expansion using the 4 indicated Torx screws (T10) (2 already removed, 2 included in delivery); the tightening torque is approx. 0.5 Nm.

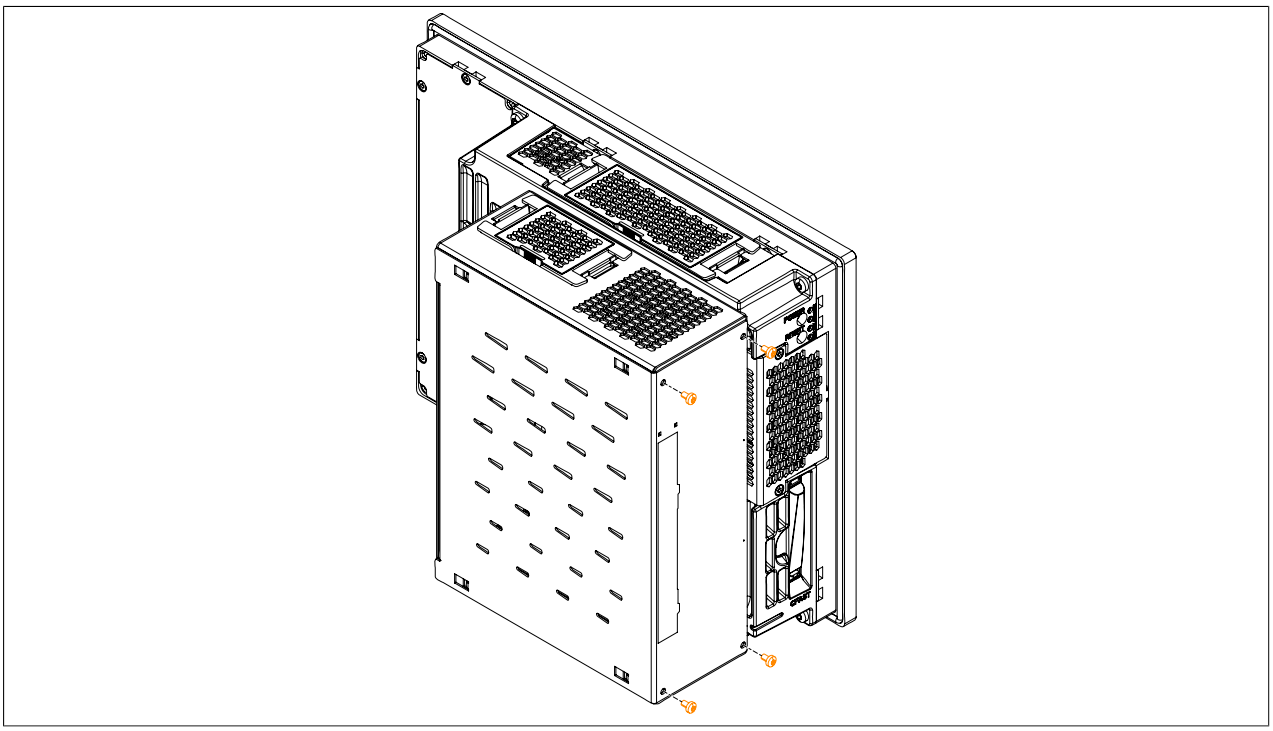

Figure 81: Replacing the side cover

8. The Panel PC can now be installed back in the control cabinet, see section "Installation Panel PC" on page 130.

1.11 Installing PCI / PCIe cards

1. Disconnect the power supply to the B&R industrial PC (unplug the power cable!). Isolate from all potential sources of electrical power!
2. Touch the housing or ground connection in order to discharge any electrostatic charge from your body.
3. Remove the Panel PC from the control cabinet. To do so, follow the steps in section "Installation Panel PC" on page 130 in reverse order.
4. Place the Panel PC on a clean, flat surface.
5. Remove the Torx screws (T10) indicated in the following image. Slide the cover plate forward to remove it.

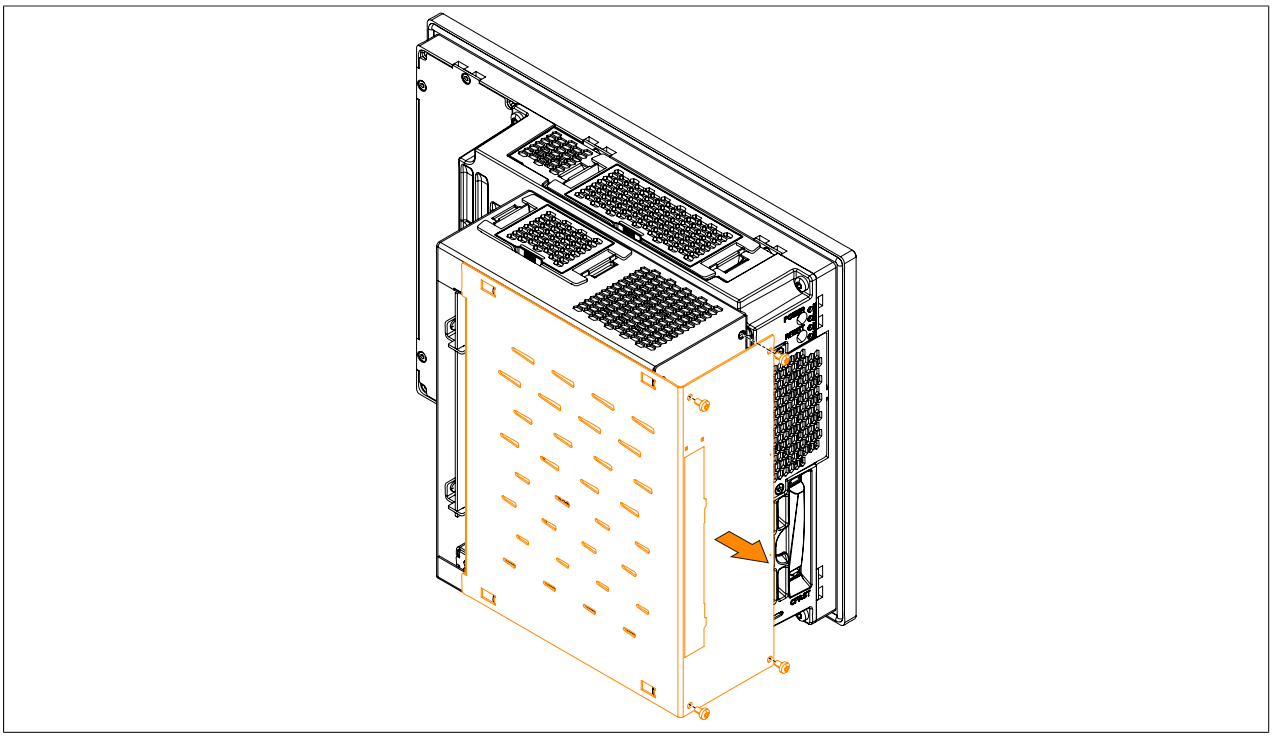

Figure 82: Removing the Torx screws and side cover

6. Remove the PCI slot cover from the bus unit. This is done by first removing the marked Torx screws (T10) and then removing the cover.

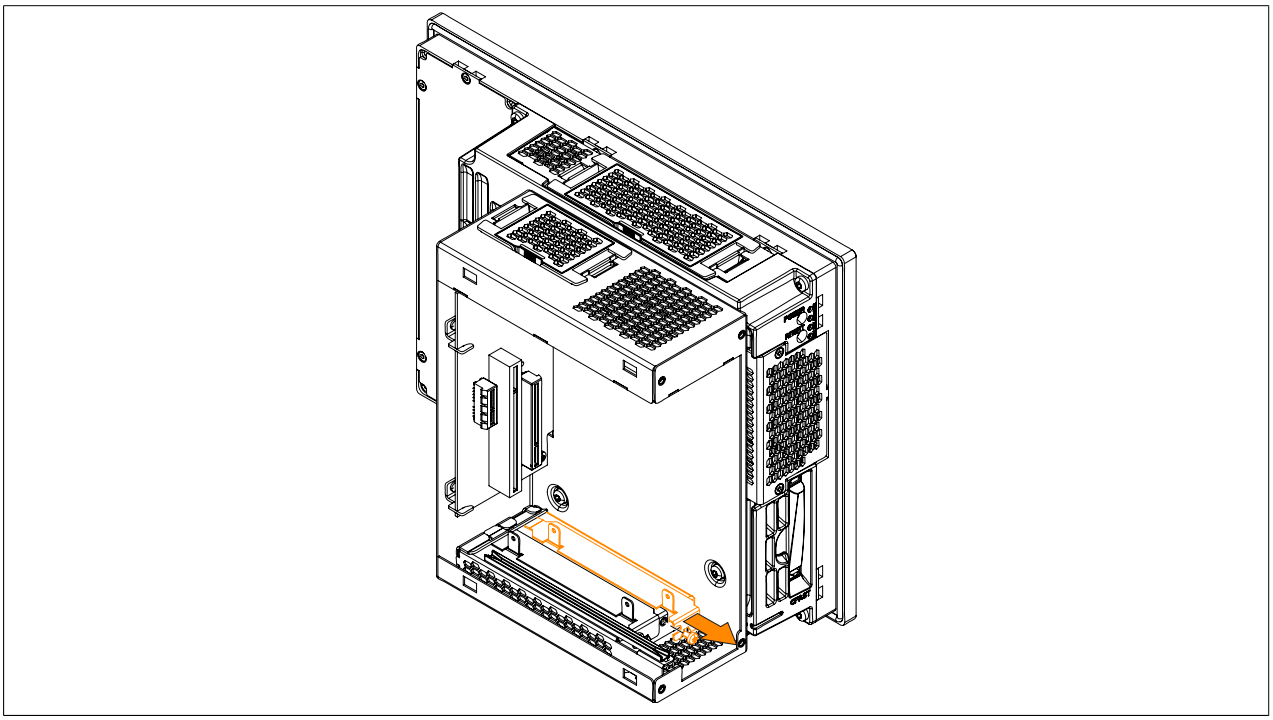

Figure 83: Removing the Torx screws and slot cover

7. Install the PCI or PCIe card in the bus unit. Be sure to insert the PCI or PCIe card in the black guide rail at the top of the bus unit. Fasten the PCI or PCIe card using the indicated Torx screws (T10) removed earlier; the max. tightening torque is 0.5 Nm).
   A description and pinout of the bus units can be found in the section "Bus units" on page 79.

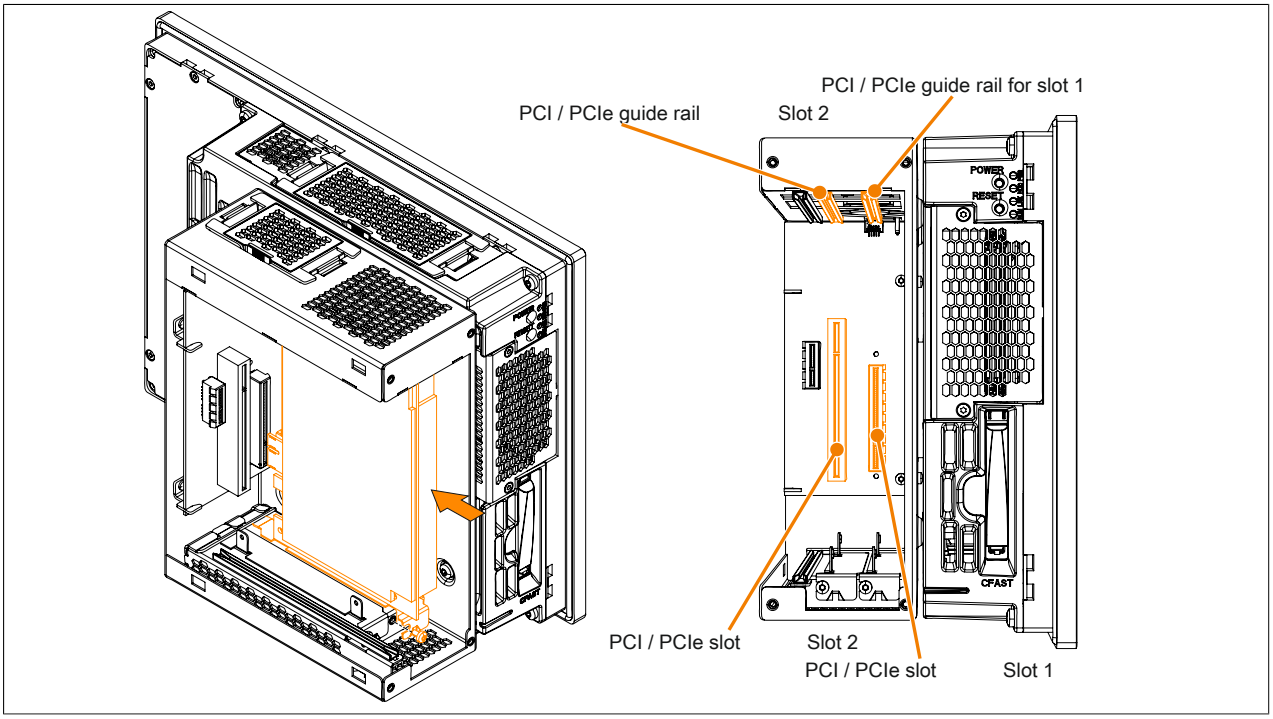

Figure 84: Installing the PCI / PCIe card in the bus unit

8. Install the side cover on the bus unit using the 4 indicated Torx screws (T10); the max. tightening torque is 0.5 Nm.

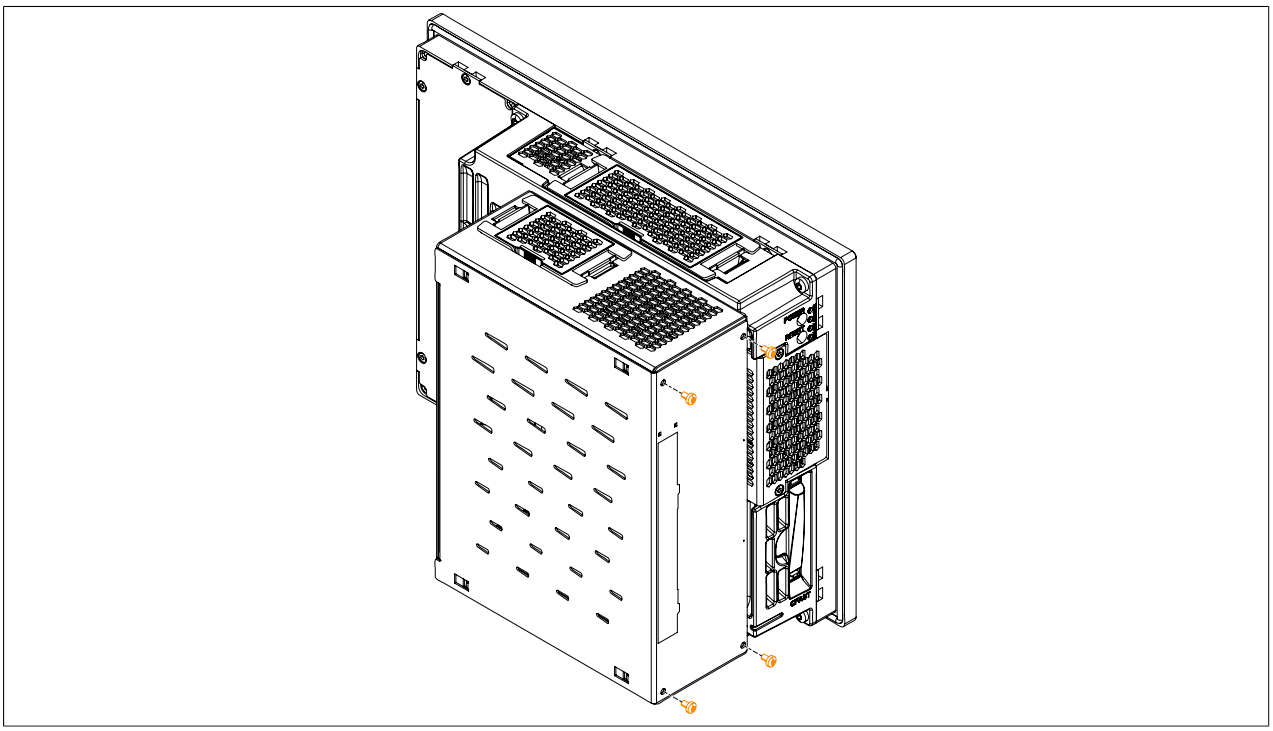

Figure 85: Replacing the side cover

9. The Panel PC can now be installed back in the control cabinet, see section "Installation Panel PC" on page 130.

1.12 Installing a slide-in drive

1. Disconnect the power supply to the B&R industrial PC (unplug the power cable!). Isolate from all potential sources of electrical power!
2. Touch the housing or ground connection in order to discharge any electrostatic charge from your body.
3. Remove the Panel PC from the control cabinet. To do so, follow the steps in section "Installation Panel PC" on page 130 in reverse order.
4. Place the Panel PC on a clean, flat surface.
5. Remove the Torx screws (T10) indicated in the following image. Slide the cover plate forward to remove it.

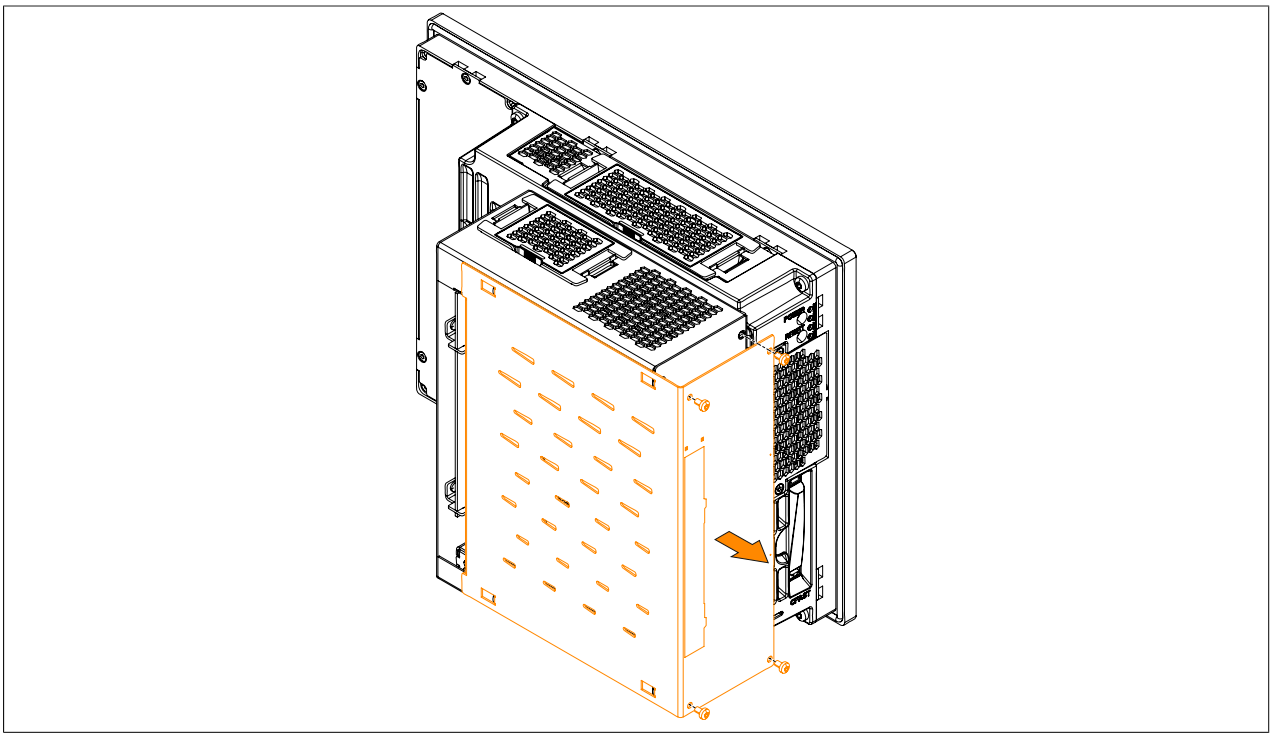

Figure 86: Removing the Torx screws and side cover

6. Remove the slide-in slot cover from the side cover. This is done by pressing in the 6 indicated snap arms and removing the slot cover.

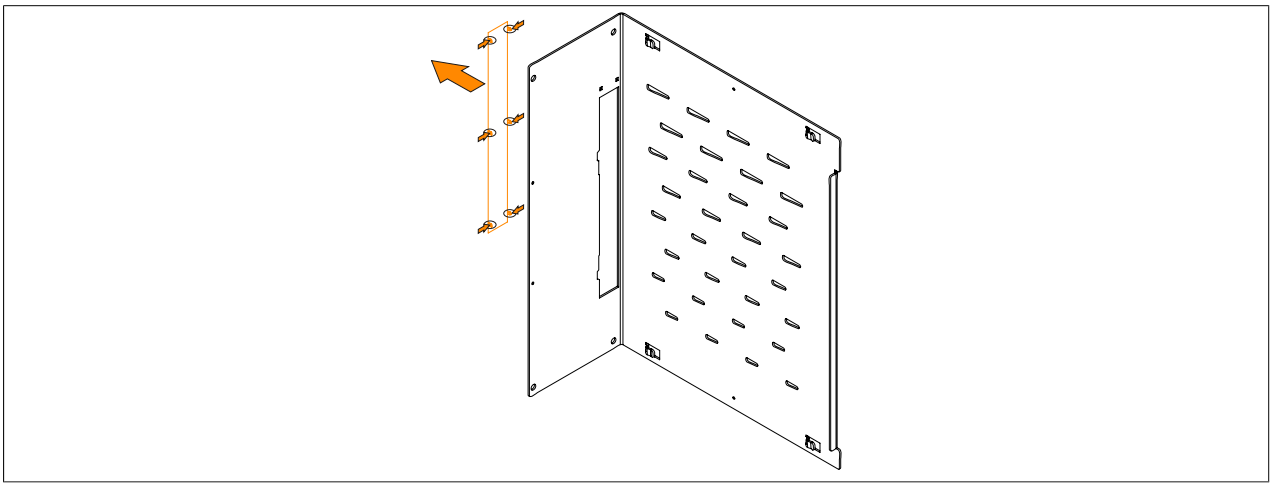

Figure 87: Remove the slide-in slot cover from the side cover.

7. Install the slide-in drive in the bus unit. Be sure to insert the slide-in drive in the black guide rails at the top and bottom of the bus unit.

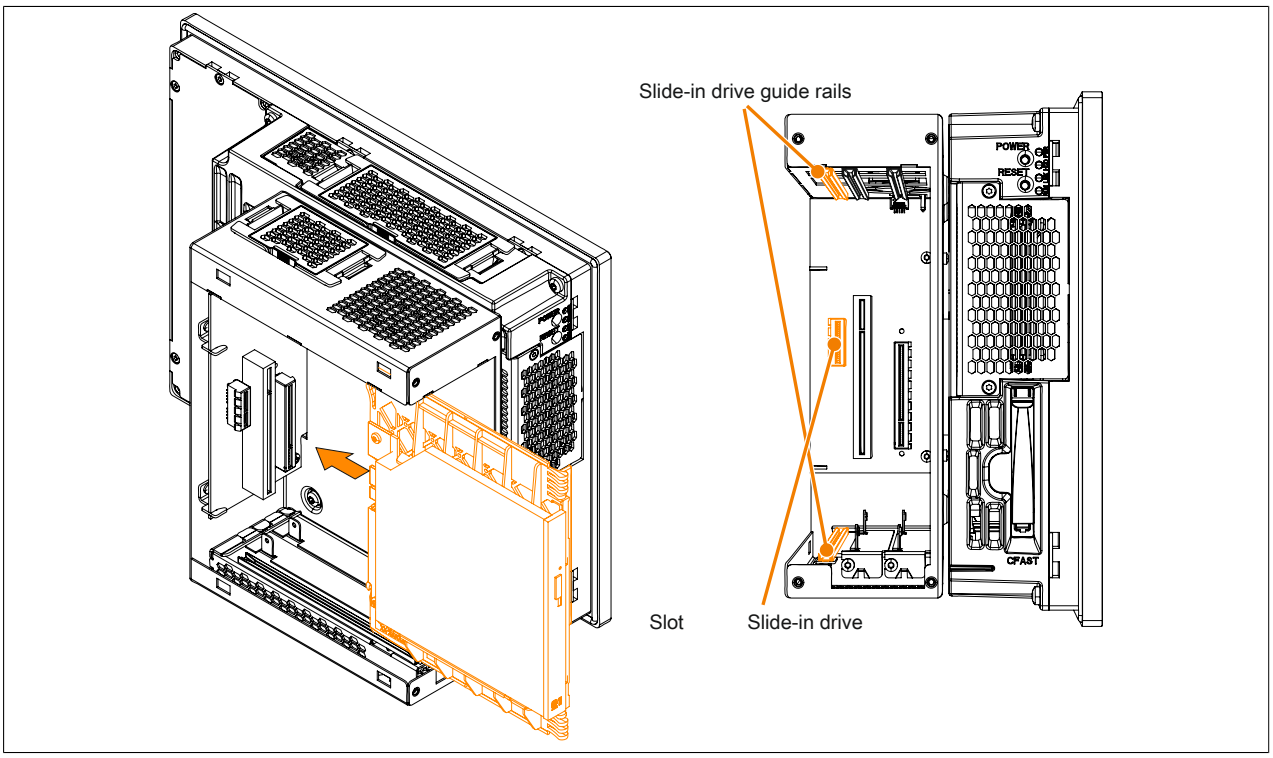

Figure 88: Installing the slide-in drive in the bus unit

8. Install the side cover on the bus unit using the 4 indicated Torx screws (T10); the max. tightening torque is 0.5 Nm.
   The slide-in slot cover must be installed in order to operate the 5AC901.SSCA-00 slide-in compact adapter.

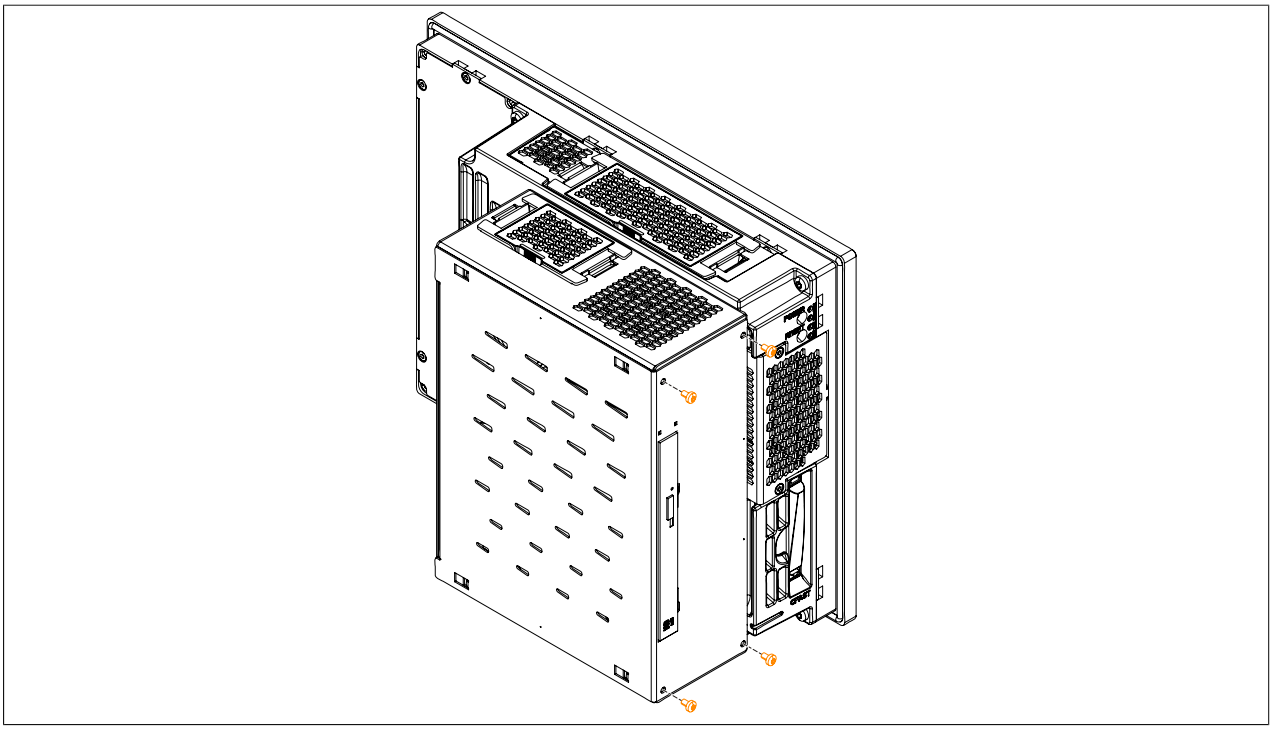

Figure 89: Replacing the side cover

9. The Panel PC can now be installed back in the control cabinet, see section "Installation Panel PC" on page 130.

1.13 Installing and connecting the UPS battery unit

Warning!

Do not open the UPS battery unit!

1. Disconnect the power supply to the B&R Industrial PC.
2. Install the battery unit. Information about the drilling template can be found in the technical data of the respective UPS battery unit. Ensure that the distance between the battery unit and the B&R industrial PC allows them to be connected with the UPS cable (0.5 m, 1 m or 3 m).
   Installation requires 4 M5 screws, 4 washers and 1 screw lock (min. torque 1.3 Nm; screw depth as per applicable DIN regulations and specific application). These are not included in delivery.
3. Connect the UPS cable to the battery unit. When doing so, make sure to connect the red and black wires to the power supply (orange screw clamp). Be sure to use the right connection terminals (red wire for +; black wire for -)!
   Connect the white and brown wires to the temperature sensor (green screw clamp terminal block) (white wire for 1; brown wire for 2).

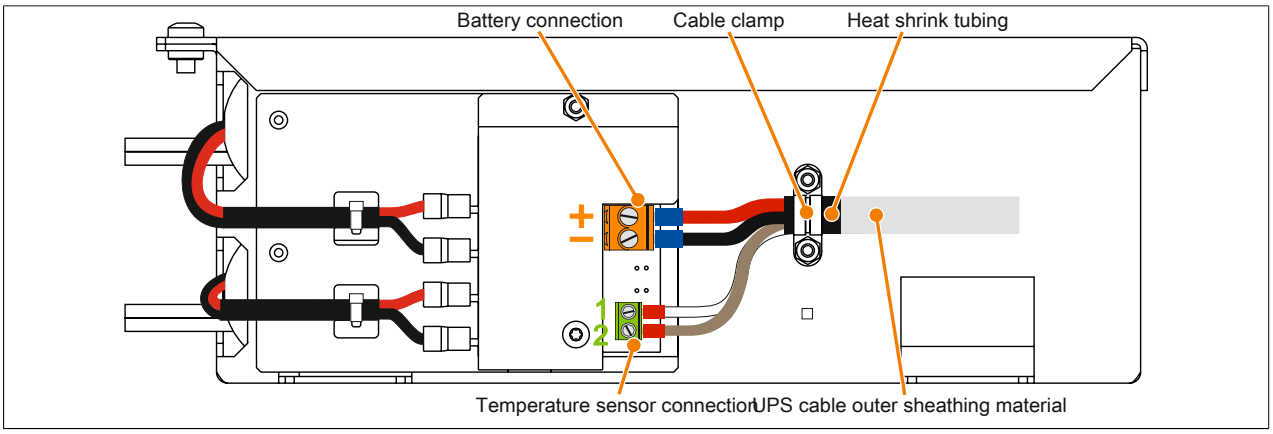

Figure 90: Connecting the UPS cable to the battery

4. Tighten the connected wires in the screw clamps with a screw driver (to a max. tightening torque of 0.4 Nm).
5. Loosen the two nuts (M3) on the cable clamp and feed the UPS cable through.
6. Fasten the UPS cable using the cable clamp. Tighten the previously removed nuts onto the cable clamp in alternating order (max. 0.35 Nm torque).
7. Connect the 4-pin screw clamp to the UPS IF option and tighten the two screws with a screwdriver (max. torque 0.4 Nm).

2 Connecting to the power mains

Danger!

- **All supply voltage must be disconnected before removing device covers or components or removing/installing accessories, hardware or cables.**
- **The power cable must be disconnected from the device and from the voltage supply.**
- **Before the device can be connected to the power supply and turned on, all covers, components, accessories, hardware and cables must be installed or attached.**

2.1 Installing the DC power cable

Danger!

Supply voltage to the B&R Industrial PC must be disconnected completely. Before connecting the DC power cable, it is important to make absolutely sure that it has been disconnected from the power source (e.g. power supply).

2.1.1 Wiring

The DC power cable must be secured in the terminal block (power connector) as shown in the image. Wires with a cross section of 0.75 mm² to 1.5 mm² and wire end sleeves are to be used.

Installing the 0TB103.9 screw clamp terminal block

Insert the wires with the wire end sleeves into the terminal contacts ② as shown in the image and tighten the screw clamps ① with a screwdriver (max. torque of 0.4 Nm).

It is important to pay attention to the pin assignments of the power supply connector on the device!

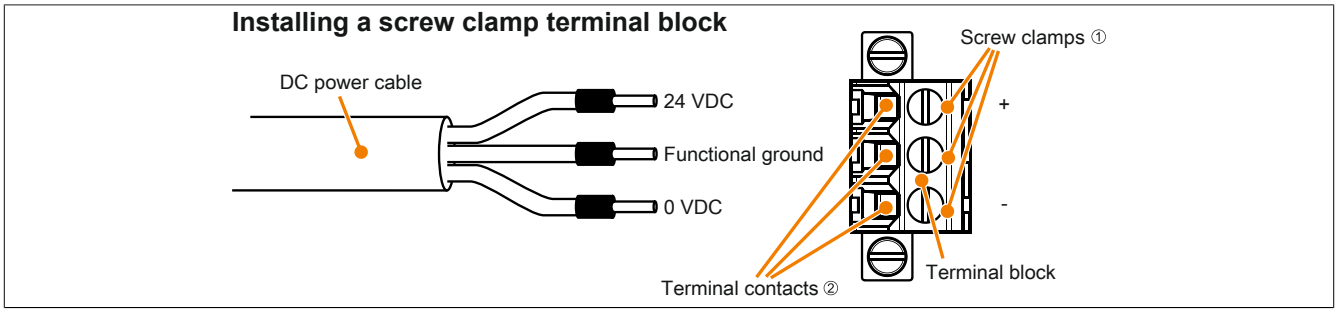

Figure 91: Installing a screw clamp terminal block

Installing the 0TB103.91 cage clamp terminal block

Insert a screwdriver into the cage clamp terminal ① and fasten the wires with wire end sleeves in the terminal contacts ② as shown in the image below. Close the terminal contact by removing the screwdriver.

It is important to pay attention to the pin assignments of the power supply connector on the device!

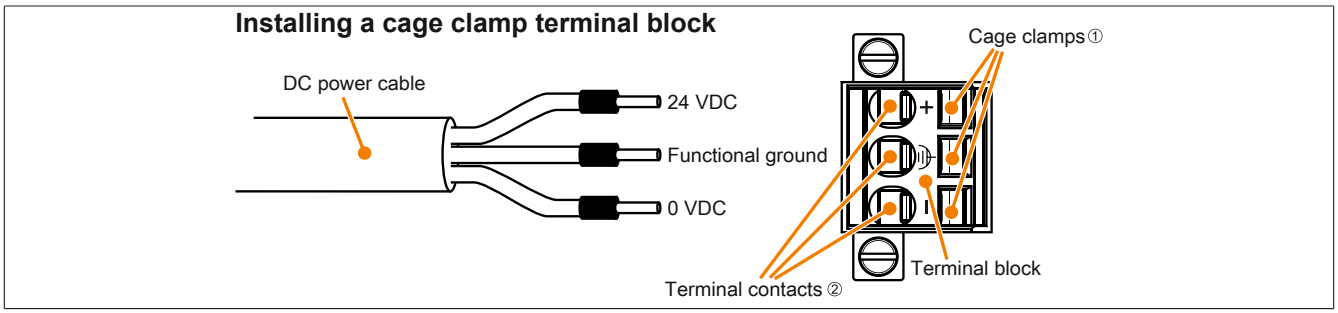

Figure 92: Installing a cage clamp terminal block

2.2 Installing the AC power cable

Danger!

Supply voltage to the B&R Industrial PC must be disconnected completely. Before connecting the AC power cable, it is important to make absolutely sure that it has been disconnected from the power source (e.g. power supply).

2.2.1 Wiring

The AC power cable must be secured in the terminal block (power connector) as shown in the image. Wires with a cross section of 0.75 mm^2 to 4 mm^2 and wire end sleeves are to be used.

Installing the 0TB3103.8000 screw clamp terminal block

Insert the wires with the wire end sleeves into the terminal contacts ② as shown in the image and tighten the screw clamps (located on the top of the screw clamp terminal block) with a screwdriver (max. torque 0.6 Nm).

It is important to pay attention to the pin assignments of the power supply connector on the device!

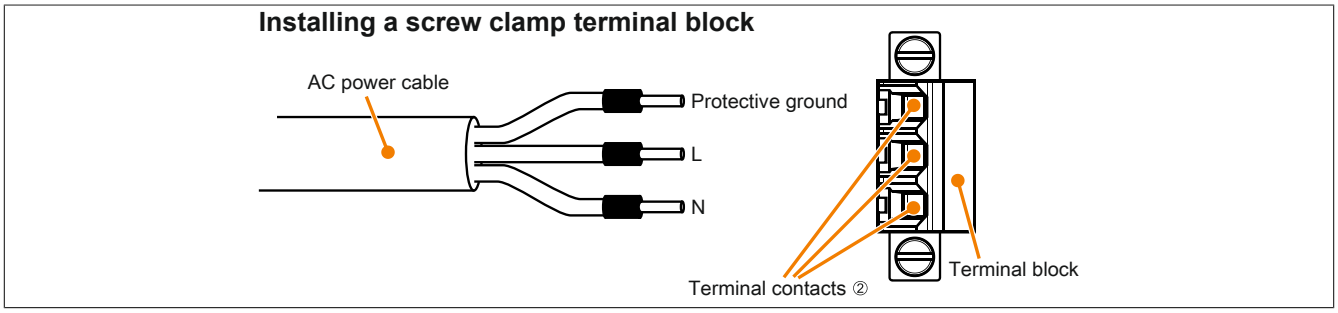

Figure 93: Installing a screw clamp terminal block

2.3 Connecting the power supply to a B&R device

Danger!

The supply voltage to the B&R device must be completely disconnected. Before connecting the mains cable, it is important to make absolutely sure that it has been disconnected from the power source (e.g. power supply).

1. Touch the housing or ground connection in order to discharge any electrostatic charge from your body.
2. Connect the power supply connector to the B&R device and tighten the fastening screws (max. tightening torque 0.5 Nm).

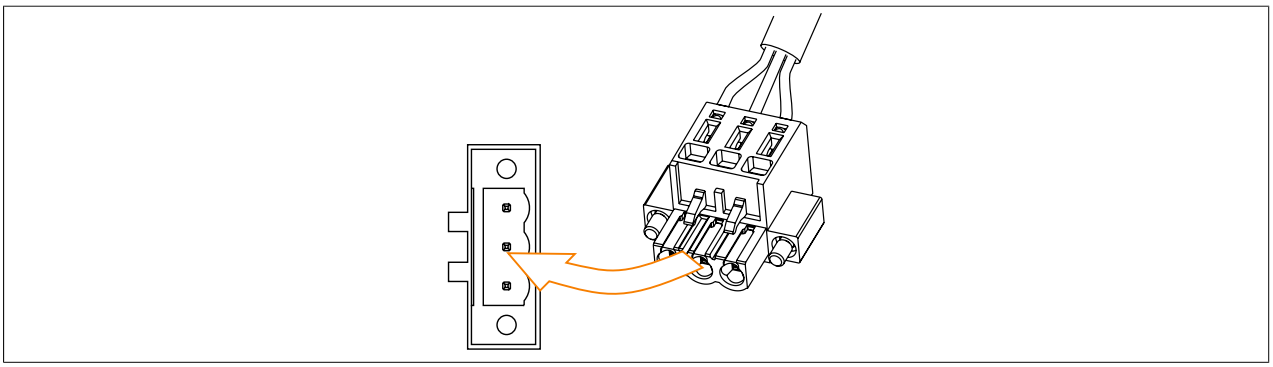

Figure 94: Connecting the power supply connector to a B&R device.

2.4 Grounding concept functional ground

Functional ground is a current path of low impedance between electrical circuits and ground. It is used, for example, to improve immunity to disturbances and not necessarily as a protective measure. It therefore serves only to deflect disturbances, not to provide any kind of protection against electric shock.

The functional ground on the device has 2 connections:

- Supply voltage
- Ground connection

To guarantee safe conductance of electric disturbances, the following points should be observed:

- The device should be connected to the central grounding point in the control cabinet using the shortest route possible.
- A cable with a minimum cross section of 2.5 mm² per connection should be used. If a cable with wire end sleeves is connected to the 0TB103.9 or 0TB103.91 terminal block, then a cable with maximum 1.5 mm² per connection is possible.
- Note the line shielding concept; all connected data cables are used as shielded lines.

Functional ground is indicated on the B&R device with the following symbol: ⏚

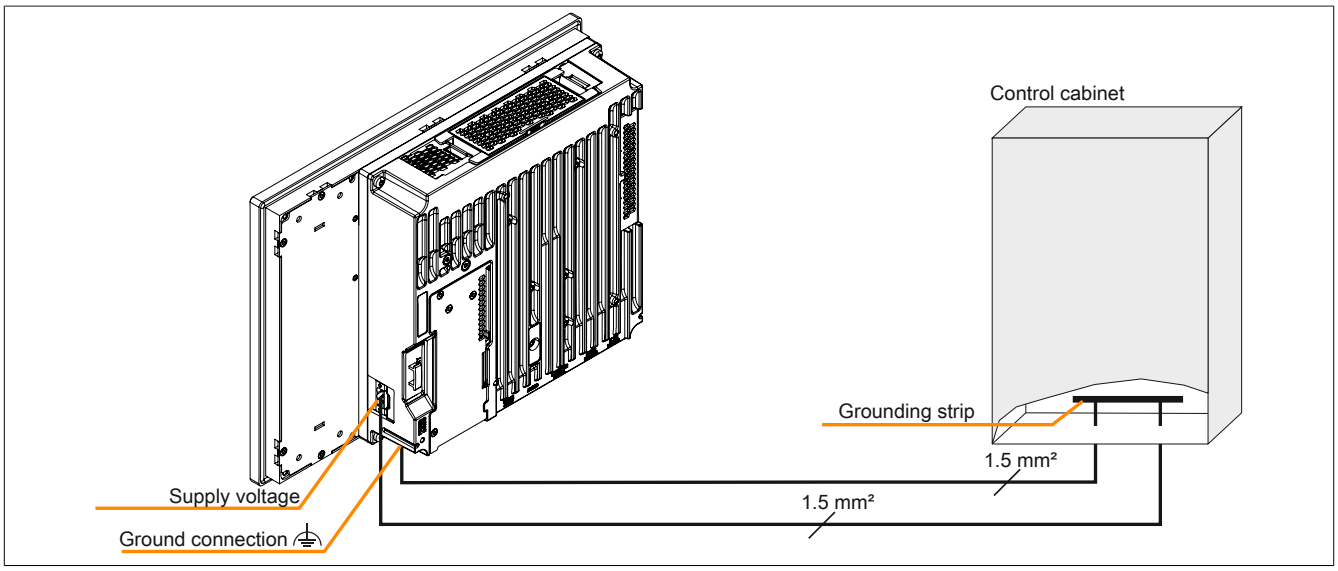

Figure 95: Panel PC 900 - Grounding concept

3 Cable connections

Flex radius specifications must be taken into account when installing or connecting cables.

Information:

The maximum torque for the locating screws is 0.5 Nm.

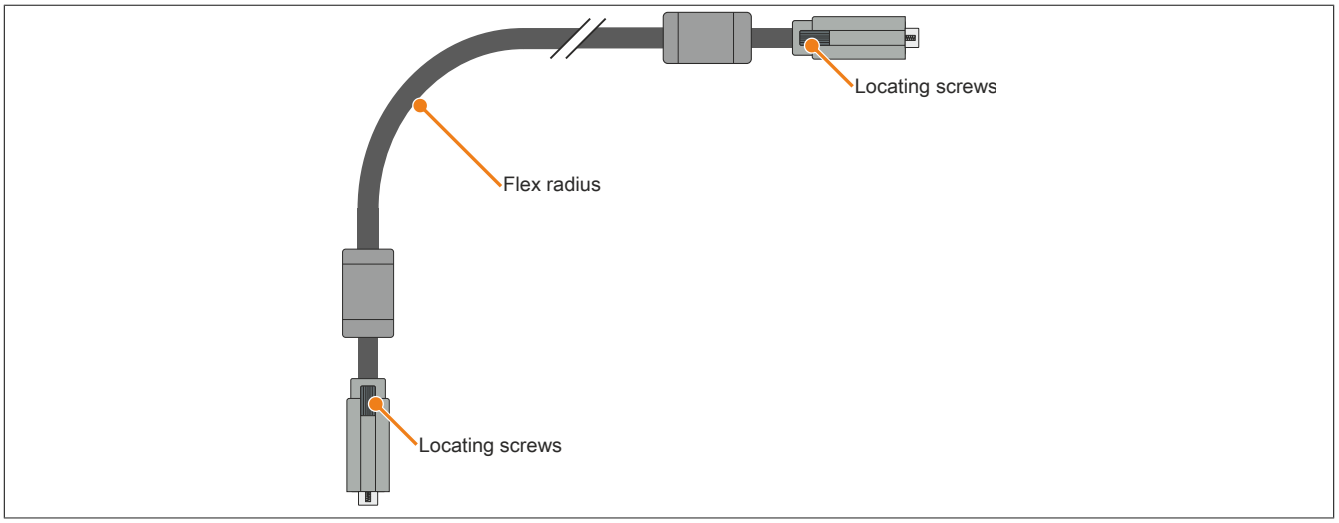

Figure 96: Flex radius - Cable connection

Information:

The specified flex radius is listed in the technical data for the respective cable.

4 Switching on for the first time

4.1 General information before switching on

Checklist

The following items must be checked before the device is put into operation for the first time:

- Have the installation notes as specified in "Installation" on page 130 been observed?
- Have the permitted environmental conditions been taken into consideration for the device?
- If the power supply connected correctly and have the values been checked?
- Is the ground cable connected correctly to the ground connection?
- The device must be put into operation first before additional hardware (e.g. PCI card) is installed.

> **Caution!**
>
> **Before the device is put into operation, it must first be acclimated to room temperature! It should not be immediately subjected to thermal radiation.**
>
> **If transported at low temperatures or if there are large temperature fluctuations, the device must not be subjected to any type of moisture.**

Requirements

The following requirements must be fulfilled before the device is switched on for the first time:

- The ground cable is connected.
- All connection cables are connected correctly.
- A USB keyboard and USB mouse are connected (optional).

4.2 Switching on the Panel PC

Procedure

1. Connect and switch on the voltage supply (e.g. power supply).
2. Switch on the device by pressing the power button (DC power supply) or the on/off switch on the optional power supply (AC voltage supply).
3. The device is booting and operating; the Power LED is lit.

5 Touch screen calibration

B&R touch screen devices are equipped with a B&R touch controller that supports hardware calibration. As a result, devices are pre-calibrated when delivered. This is an advantageous feature when replacing devices of the same model or type since it avoids having to recalibrate the new device. Nevertheless, calibrating the device is still recommended in order to achieve the best results and to better adapt the touch screen to the user's preferences.

5.1 Single-touch (analog resistive)

5.1.1 Windows 7 Professional / Ultimate

After installing Windows 7 on the device, the touch screen driver must be installed in order to operate the touch screen. The necessary driver is available in the Downloads section of the B&R website (www.br-automation.com).

5.1.2 Windows Embedded Standard 7 Embedded / Premium

A touch screen driver will be installed automatically if a touch controller is detected during the Windows Embedded Standard 7 installation.

The touch screen driver must be installed manually if a touch controller was not detected during the Windows Embedded Standard 7 setup or if an Automation Panel 800/900/9x3/9xD has been connected after setup. The necessary driver is available in the Downloads section of the B&R website (www.br-automation.com).

5.1.3 Windows XP Professional

After installing Windows XP Professional on the device, the touch screen driver must be installed in order to operate the touch screen. The necessary driver is available in the Downloads section of the B&R website (www.br-automation.com).

5.1.4 Windows Embedded Standard 2009

After starting Windows Embedded Standard 2009 on the Panel PC or Power Panel for the first time (first boot agent), the corresponding touch screen driver is installed automatically.

On all other devices, the touch screen driver must be installed in order to operate the touch screen. The necessary driver is available in the Downloads section of the B&R website (www.br-automation.com).

5.2 Multi-touch (PCT - Projected capacitive)

5.2.1 Windows 7 Professional / Ultimate

Microsoft multi-touch drivers are installed when Windows 7 is installed on the device. Once the installation of Windows 7 has completed, the device can be operated immediately.

5.2.2 Windows Embedded Standard 7 Premium

Microsoft multi-touch drivers are installed when Windows Embedded Standard 7 Premium is installed on the device. Once the installation of Windows Embedded Standard 7 Premium has completed, the device can be operated immediately.

6 Adjusting the display brightness

1. Open the Control Center in the Control Panel.
2. Select the Display tab.
3. Select a panel from the list. Only the local display (PP Link) and connected panels are shown in the list.
4. Set the desired brightness using the slider control.

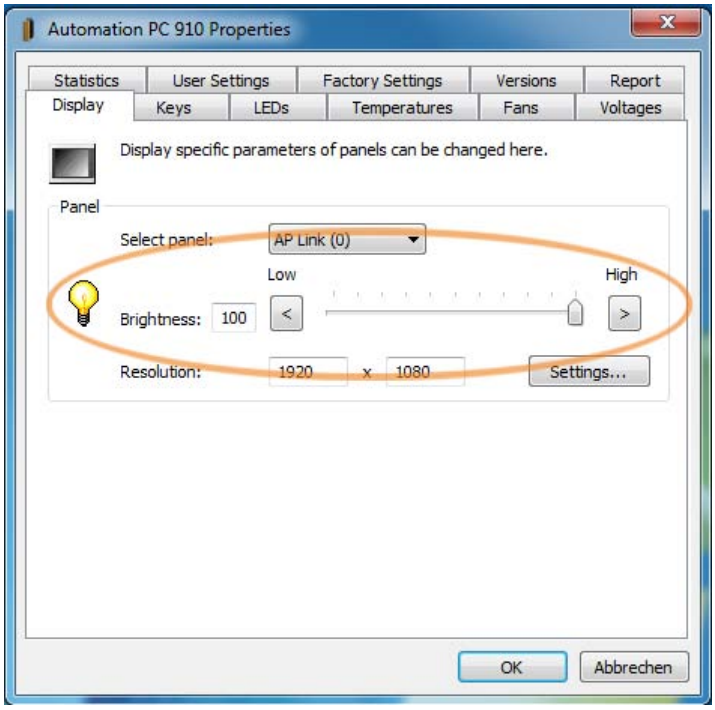

Figure 97: Adjusting the display brightness

Information:

Changes to these settings are displayed online but are only noted by the system (and applied during the next restart) if the Control Center is closed with *OK*.

The configured brightness depends on the value configured in BIOS, i.e. until Windows is booted, the value set in BIOS is used. The value set in BIOS is only applied the first time the Control Center is opened.

7 Configuring a SATA RAID set using the internal RAID controller

The following software description applies to the internal RAID controller with QM77 chipset. The HM76 chipset does not provide RAID support.

Information:

B&R recommends using only drives of the same type in a SATA RAID set (hard disk with hard disk in a set, SSD with SSD in a set; CFast with CFast in a set).

Caution!

The maximum number of possible write cycles must be taken into consideration when setting up a RAID set with SSDs (with MLC technology).

In order to create a SATA RAID set and get into the "Configuration Utility", *SATA mode selection* must be set to *RAID* in the "Advanced - SATA configuration" menu.

The "Configuration Utility" in BIOS must be started in order to make the necessary settings. After POST, pressing <Ctrl+I> opens the RAID BIOS.

```
Intel(R) Rapid Storage Technology - Option ROM - 11.6.0.1624
Copyright(C) 2003-12 Intel Corporation. All Rights Reserved.


 RAID Volumes:
 ID  Name     Level              Strip            Size  Status          Bootable
 0   Mirror   RAID1(Mirror)      N/A            465.8GB  Normal             Yes

 Pyhsical Devices:
 ID  Device   Model        Serial #                Size  Type/Status(Vol ID)
 0   WDC      WD500LUCT-6  WD-WX21AB2X6150       465.7GB  Member Disk(0)
 2   WDC      WD500LUCT-6  WD-WX21AB2X6150       465.7GB  Member Disk(0)

Press <CTRL-I> to enter Configuration Utility..
```

Figure 98: Configuration Utility - Boot

```
              Intel(R) Rapid Storage Technology - Option ROM - 11.6.0.1624
              Copyright(C) 2003-12 Intel Corporation. All Rights Reserved.
                                  [ MAIN MENU ]
            1.  Create RAID Volume          4.  Recovery Volume Options
            2.  Delete RAID Volume          5.  Acceleration Options
            3.  Reset Disks to Non-RAID     6.  Exit
                              [ DISK/VOLUME INFORMATION ]
 RAID Volumes:
 ID  Name     Level              Strip            Size  Status          Bootable
 0   Mirror   RAID1(Mirror)      N/A            465.8GB  Normal             Yes

 Pyhsical Devices:
 ID  Device   Model        Serial #                Size  Type/Status(Vol ID)
 0   WDC      WD500LUCT-6  WD-WX21AB2X6150       465.7GB  Member Disk(0)
 2   WDC      WD500LUCT-6  WD-WX21AB2P6063       465.7GB  Member Disk(0)

          [↑↓]-Select              [ESC]-Exit              [ENTER]-Select Menu
```

Figure 99: Configuration Utility - Overview

The following keys can be used once inside BIOS Setup:

Key	Function
Cursor ↑	Moves to the previous item
Cursor ↓	Moves to the next item
Enter	Selects an item or opens a submenu
ESC	Returns to the previous menu
Ctrl+E	Saves any changed settings and exits setup

Table 134: BIOS-relevant keys in the RAID Configuration Utility

7.1 Create RAID volume

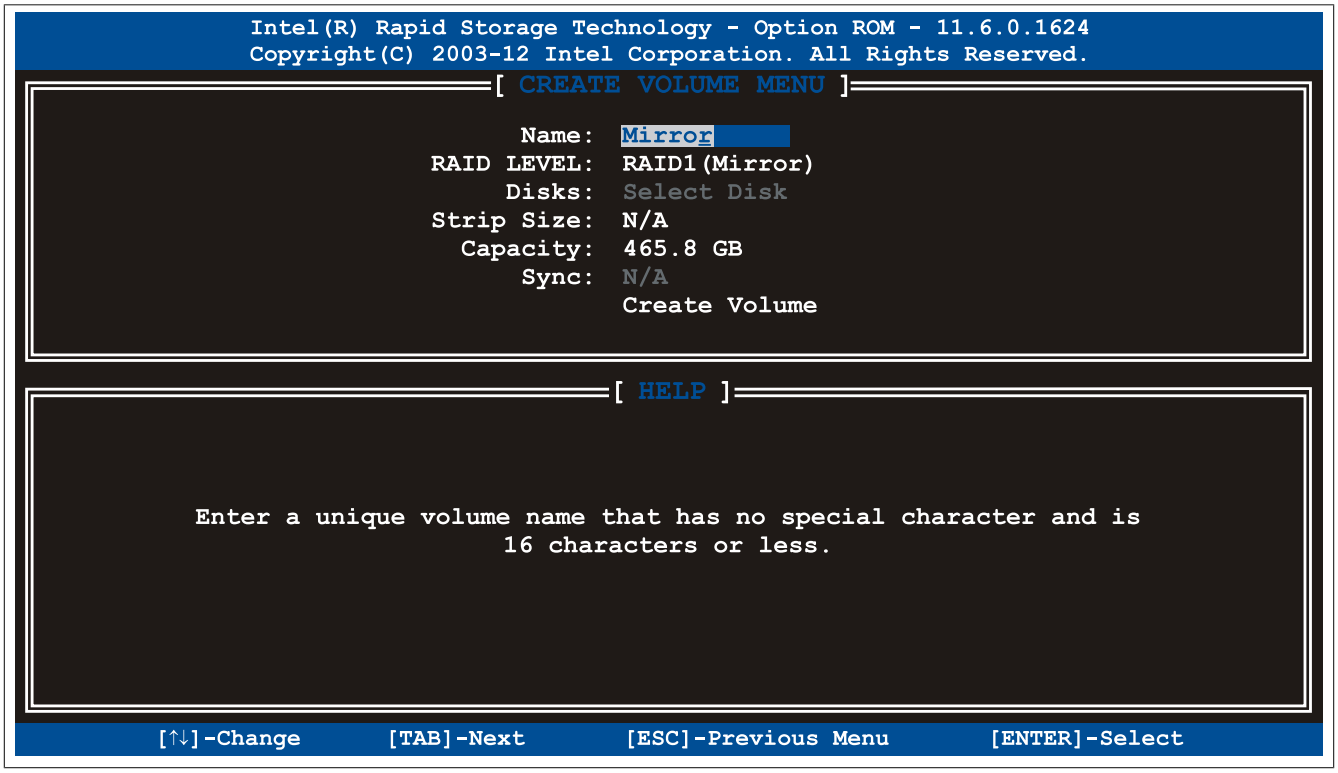

Figure 100: Configuration Utility - Create RAID volume

Parameter	Function	Configuration options	Effect
Name	Option for entering the RAID name	Name with up to 16 characters	Assigns a name to the RAID volume
RAID level	Option for setting the RAID level	RAID0 (Stripes)	Creates RAID0
		RAID1 (Mirror)	Creates RAID1
		Recovery	Creates recovery RAID
Disks[1)]	Specifies the installed hard disks as either Master or Recovery	Master, Recovery	Defines the hard disks as Master or Recovery
Strip size[2)]	Option for configuring the size of data blocks	4 KB, 8 KB, 16 KB, 32 KB, 64 KB, 128 KB	Configures the size of the data block
Capacity	Option for configuring the RAID capacity		Configures the memory size of the RAID
Sync[3)]	Option for configuring RAID synchronization	N/A	-
		Continuous	Automatically synchronizes the RAID
		On request	Manually synchronizes the RAID
Create volume	Creates the RAID volume	-	Creates the RAID volume

Table 135: Configuration Utility - Create RAID volume

1) This setting is only possible if *RAID level* is set to *Recovery*.
2) This setting is only possible if *RAID level* is set to *RAID0(Stripe)*.
3) This setting is only possible if *RAID level* is set to *Recovery*.

7.2 Delete RAID volume

The "Delete RAID volume" menu option can be used to format the RAID drive, making it non-RAID. The drive to be deleted must be selected and then deleted by pressing <DEL>.

Information:

This option deletes all data on the drive, including the operating system.

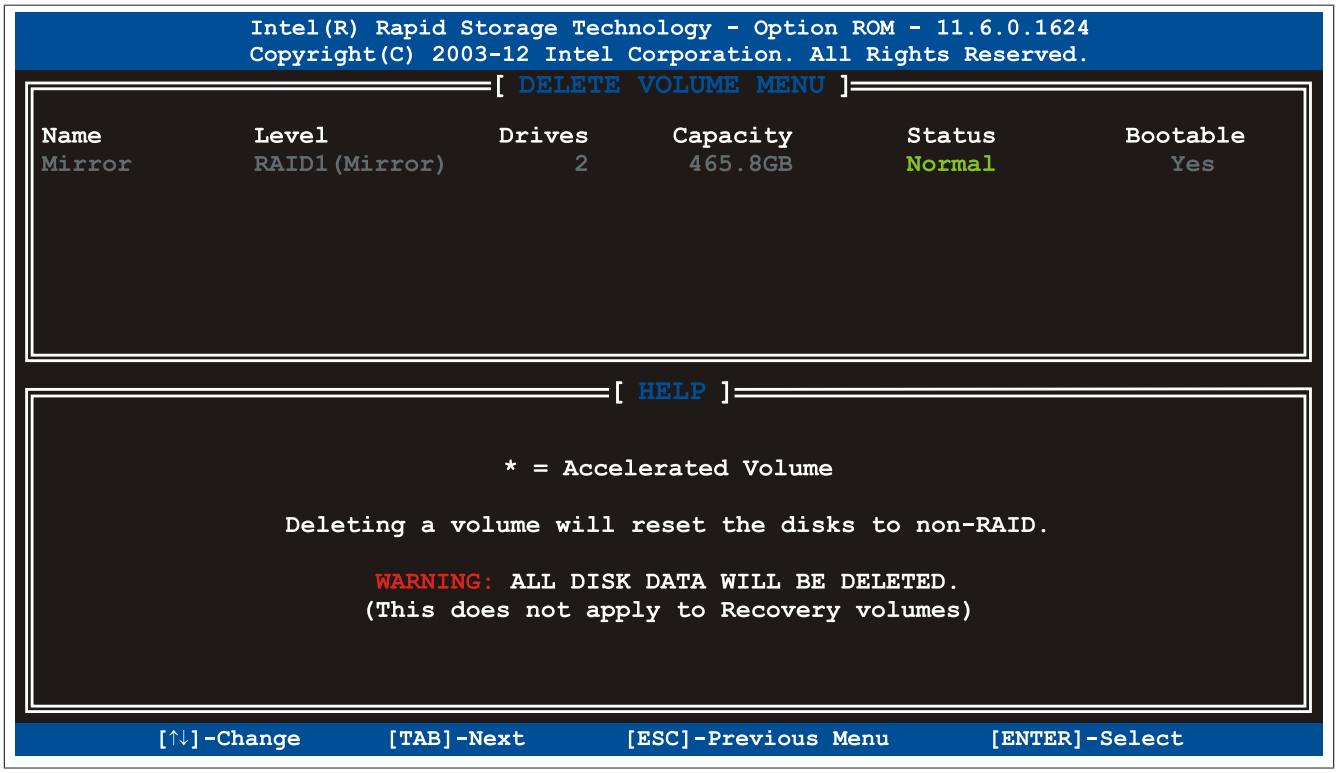

Figure 101: Configuration Utility - Delete RAID volume

7.3 Reset disks to non-RAID

An existing RAID set can be deleted using the "Reset disks to Non-RAID" option. The RAID to be deleted must be selected and then deleted by pressing <SPACE> (<ENTER> to confirm).

Information:

Deleting a RAID set also deletes all of the data on the drive.

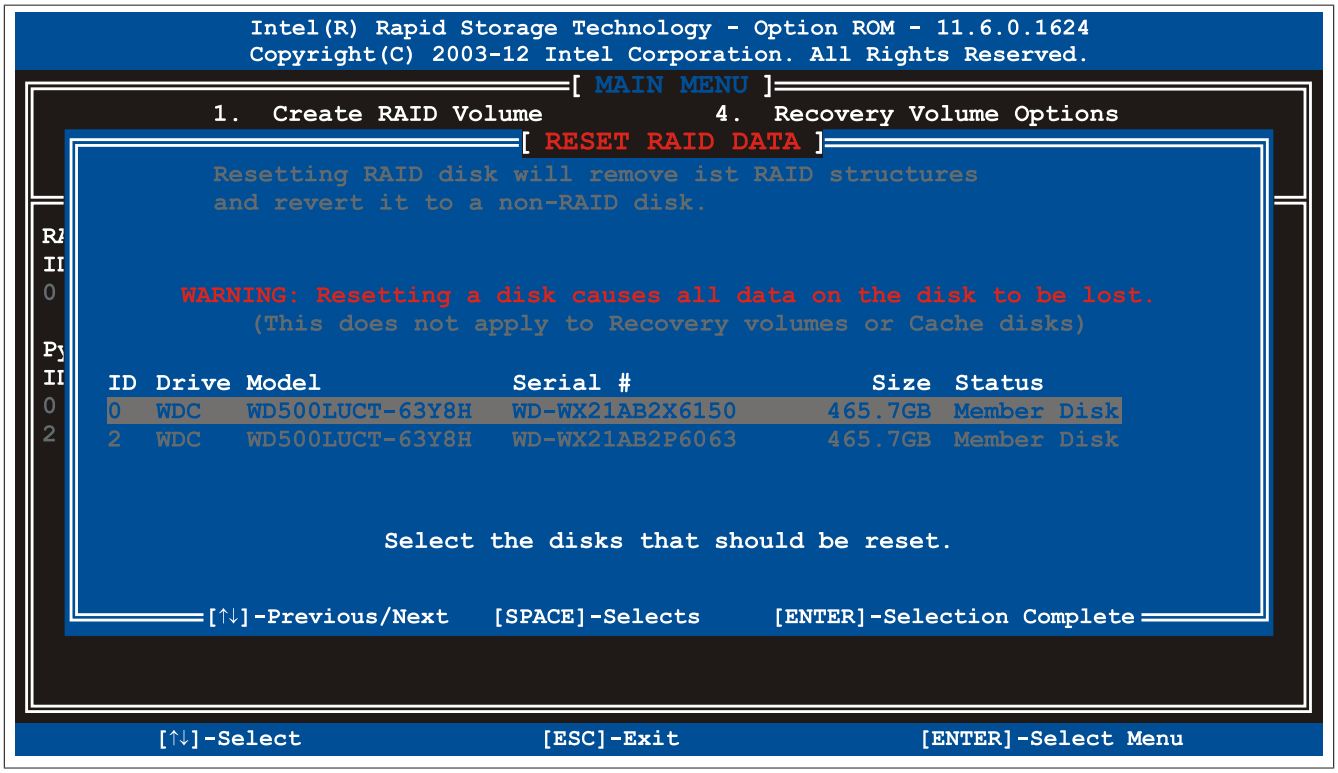

Figure 102: Configuration Utility - Reset disks to non-RAID

7.4 Recovery volume options

The "Recovery volume options" menu option can be used to enable/disable Recovery Disk and Master Disk.

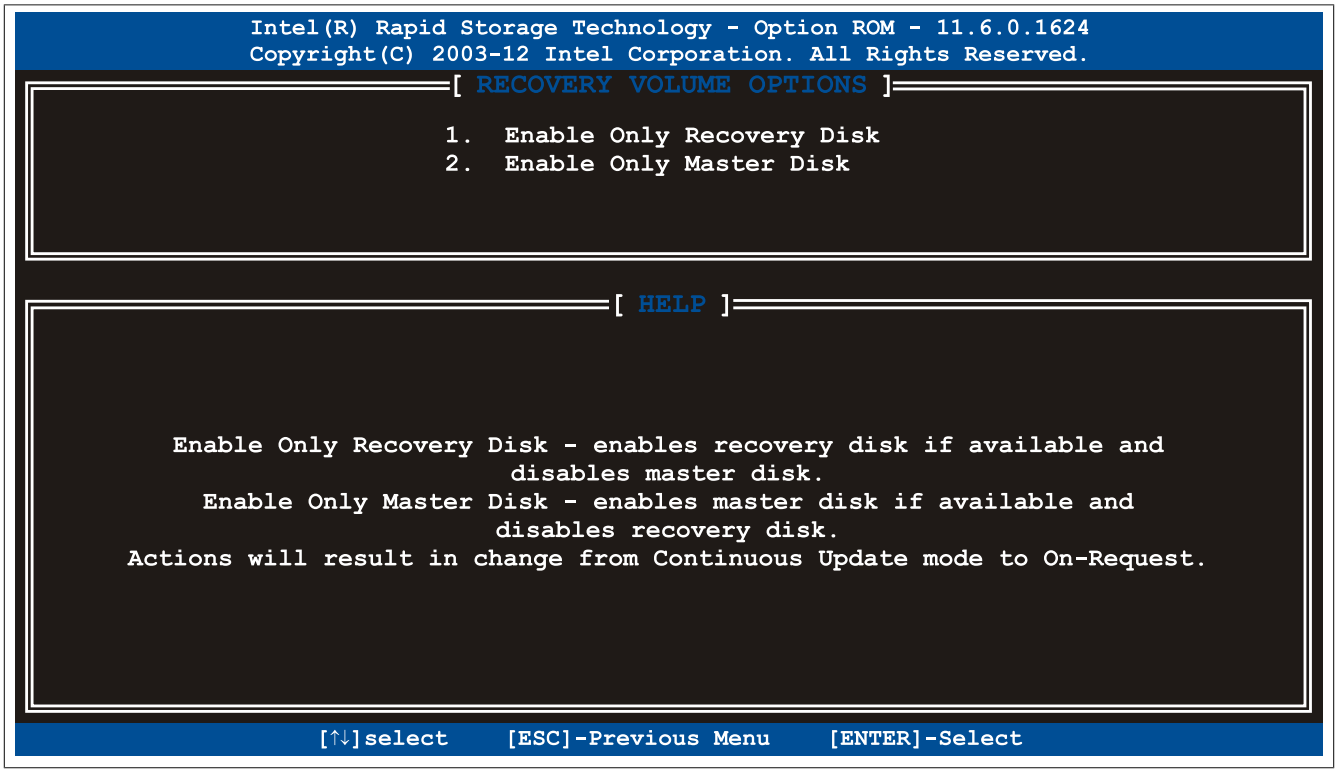

Figure 103: Configuration Utility - Recovery volume options

Chapter 4 • Software

1 BIOS options

Information:

The following diagrams and BIOS menu items including descriptions refer to BIOS version 1.15. It is therefore possible that these diagrams and BIOS descriptions will not correspond with the BIOS version actually installed. In addition, the BIOS menu items provided depend on the system configuration.

1.1 General information

BIOS is an acronym for "Basic Input/Output System". It is the most basic standardized interface between the user and the system (hardware). The BIOS system used in this B&R Industrial PC was developed by American Megatrends Inc.

The BIOS Setup utility can be used to modify basic system configuration settings. These settings are stored in CMOS and EEPROM memory (as a backup).

CMOS data is buffered by a battery (if present) and continues to remain stored on the B&R Industrial PC even when the power is turned off (no 24 VDC supply).

1.2 BIOS Setup and boot procedure

BIOS is immediately activated when switching on the power supply or pressing the power button on the B&R Industrial PC. The system checks if the setup data from EEPROM memory is "OK". If the data is "OK", then it is transferred to CMOS. If the data is "Not OK", then the CMOS data is checked to see whether it is valid. An error message is output if the CMOS data contains errors, and the boot procedure can be continued by pressing <F1>. To prevent an error message from appearing at each restart, the BIOS Setup utility can be opened by pressing <Del>. The settings can then be re-saved.

BIOS reads the system configuration information, checks and configures the system with the Power-On Self-Test (POST).

When these "preliminaries" are finished, BIOS looks for an operating system on the available data storage devices (hard drive, floppy drive, etc.). BIOS then launches the operating system and hands over to it the control of system operations.

To enter BIOS Setup, the <Del> key must be pressed after the USB controller has been initialized as soon as the following message appears on the screen (during POST): "Press DEL to run SETUP".

Figure 104: Bootscreen

1.2.1 BIOS Setup keys

The following keys are enabled during POST:

> **Information:**
>
> **Key signals from USB keyboards will only be registered after the USB controller has been initialized.**

Keys	Function
Del, F2	Opens the main BIOS Setup screen
F12	Network boot
F11	Opens the boot menu. This lists all bootable devices that are connected to the system. Selecting a device with cursor ↑, cursor ↓ and the pressing <ENTER> will boot from that device. 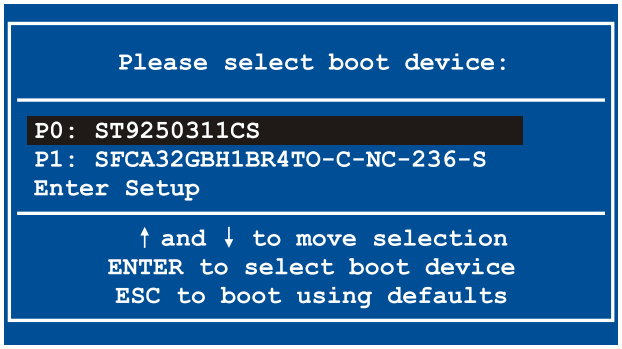
<Pause>	Pauses POST. Pressing any other key resumes POST.

Table 136: BIOS-relevant keys for POST

The following keys can be used once inside BIOS Setup:

Key	Function
F1	Opens general help information
Cursor ↑	Moves to the previous item
Cursor ↓	Moves to the next item
Cursor ←	Moves to the previous item
Cursor →	Moves to the next item
+-	Changes the setting for the selected function
Enter	Changes to the selected screen
Page ↑	Changes to the previous page
Page ↓	Changes to the next page
Pos 1	Jumps to the first BIOS menu item or object
End	Jumps to the last BIOS menu item or object
F2 / F3	Changes the colors of BIOS Setup
F7	Resets any changes
F9	Loads and configures CMOS default values for all BIOS settings
F10	Saves and exits
Esc	Exits a submenu

Table 137: BIOS-relevant keys

1.3 Main

The main BIOS Setup screen appears immediately after the <Del> button is pressed during startup.

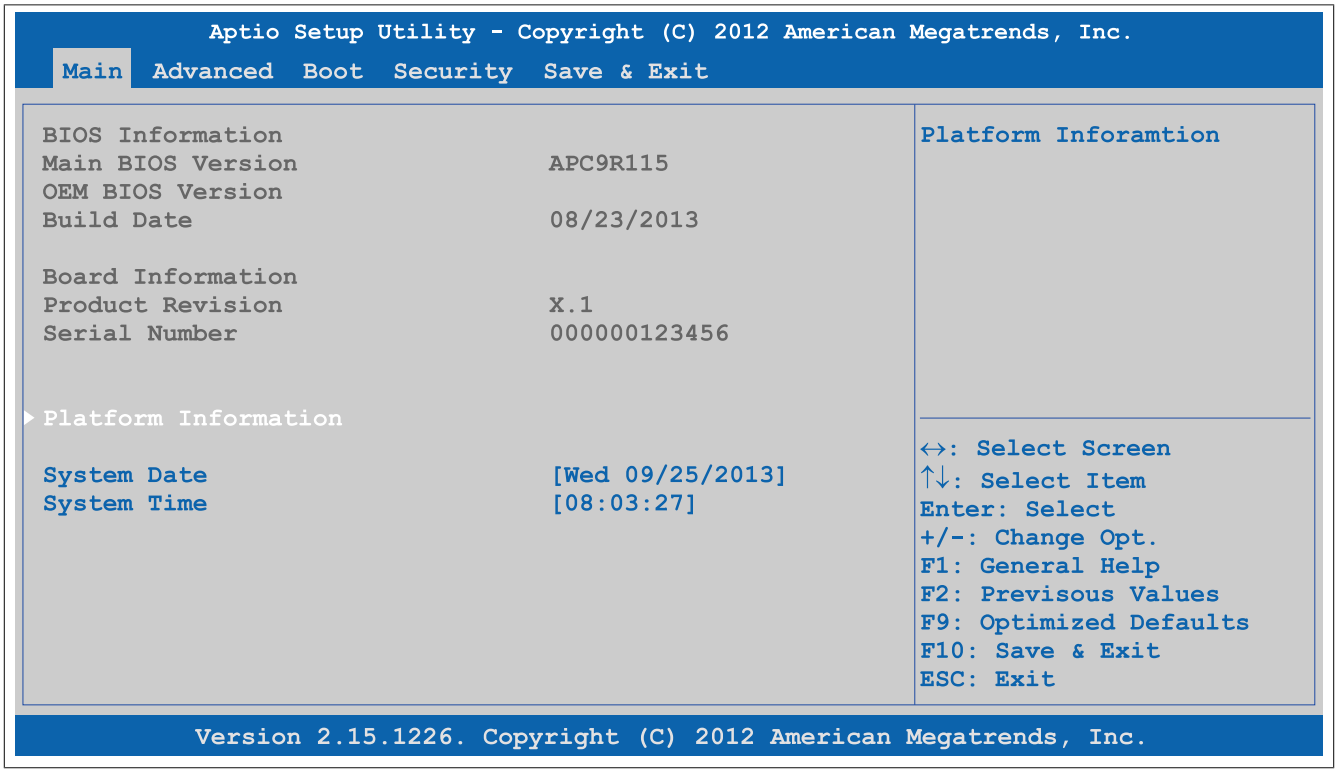

Figure 105: Main

BIOS setting	Function	Configuration options	Effect
BIOS information			
Main BIOS version	Displays the BIOS version	None	-
OEM BIOS version	Displays the OEM BIOS version	None	
Build date	Displays the date the BIOS was created	None	-
Board information			
Product revision	Displays the hardware revision of the CPU board	None	-
Serial number	Displays the serial number of the CPU board	None	-
Platform information	Displays information about the chipset, CPU board and main memory	Enter	Opens the submenu See "Platform information" on page 169
System date	The currently configured system date. This is buffered by the CMOS battery when the system is switched off.	Changes the system date	Sets the system date in the format Month:Day:Year (mm:dd:yyyy)
System time	The currently configured system time setting. This is buffered by the CMOS battery when the system is switched off.	Changes the system time	Sets the system time in the format Hour:Minute:Second (hh:mm:ss)

Table 138: Main - Configuration options

1.3.1 Platform information

```
Aptio Setup Utility - Copyright (C) 2012 American Megatrends, Inc.
Main

Processor Information                                  Platform Inforamtion
Name                                IvyBridge
Brand String                        Intel(R) Core(TM) i7-
Frequency                           1600 MHZ
Processor ID                        306a8
Stepping                            E0/L0
Number of Processes                 2Core(s) / 4 Thread(s)
Microcode Revision                  10
GT Info                             GT2 (900 MHz)

IGFX VBIOS Verison                  2137
Memory RC Version                   1.5.0.0                ↔: Select Screen
Total Memory                        4096 MB (DDR3)         ↑↓: Select Item
Memory Frequency                    1067 MHz               Enter: Select
                                                           +/-: Change Opt.
PCH Information                                            F1: General Help
Name                                PantherPoint           F2: Previsous Values
Intel PCH SKU Name                  QM77                   F9: Optimized Defaults
Stepping                            Q4/C1                  F10: Save & Exit
LAN PHY Revision                    C0                     ESC: Exit

ME FW Version                       N/A
ME Firmware SKU                     N/A

SPI Clock Frequency
DOFR Support                        Supported
Read Status Clock Frequency         33 MHz
Write Status Clock Frequency        33 MHz
Fast Read Status Clock Frequency    50 MHz

Version 2.15.1226. Copyright (C) 2012 American Megatrends, Inc.
```

Figure 106: Main - Platform Information

BIOS setting	Function	Configuration options	Effect
Processor information			
Name	Displays the processor architecture	None	-
Brand string	Displays the processor type	None	-
Frequency	Displays the processor frequency	None	-
Processor ID	Displays the processor ID	None	-
Stepping	Displays the processor stepping version	None	-
Number of processors	Displays the number of processor cores/threads	None	-
Microcode revision	Displays the processor microcode revision	None	-
GT info	Displays GT information	None	-
IGFX VBIOS version	Displays the IGFX VBIOS version	None	-
Memory RC version	Displays the memory RC version	None	-
Total memory	Displays the system memory size	None	-
Memory frequency	Displays the RAM frequency	None	-
PCH information			
Name	Displays the platform controller hub	None	-
Intel PCH SKU name	Displays the chipset on the CPU board	None	-
Stepping	Displays the chipset stepping version	None	-
LAN PHY revision	Displays the LAN revision	None	-
ME FW version	Displays the Intel management engine firmware version	None	-
ME firmware SKU	Displays the Intel management stock-keeping unit version	None	-
SPI clock frequency			
DOFR support	Displays information about DOFR support	None	-
Read status clock frequency	Displays the read status clock frequency.	None	-
Write status clock frequency	Displays the write status clock frequency	None	-
Fast read status clock frequency	Displays the fast read status clock frequency	None	-

Table 139: Main - Platform information overview

1.4 Advanced

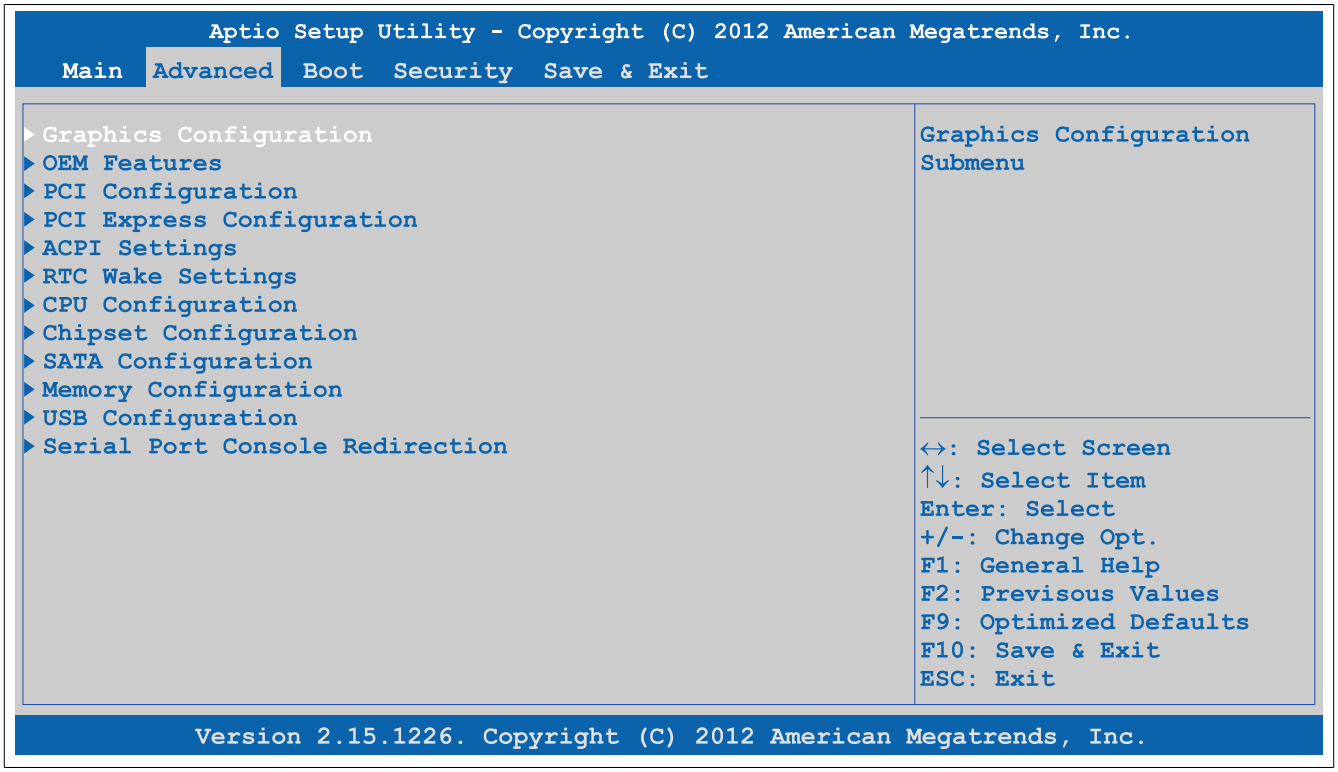

Figure 107: Advanced overview

BIOS setting	Function	Configuration options	Effect
Graphics configuration	Configures graphics settings	Enter	Opens the submenu See "Graphics configuration" on page 171
OEM features	Configures OEM features	Enter	Opens the submenu See "OEM features" on page 173
PCI configuration	Configures PCI devices	Enter	Opens the submenu See "PCI configuration" on page 192
PCI Express configuration	Configures PCI Express devices	Enter	Opens the submenu See "PCI Express configuration" on page 194
ACPI settings	Configures ACPI settings	Enter	Opens the submenu See "ACPI settings" on page 200
RTC wake settings	Configures the start time when switched off	Enter	Opens the submenu See "RTC wake settings" on page 201
CPU configuration	Configures CPU settings	Enter	Opens the submenu See "CPU configuration" on page 202
Chipset configuration	Configures chipset settings	Enter	Opens the submenu See "Chipset configuration" on page 205
SATA configuration	Configures SATA settings	Enter	Opens the submenu See "SATA configuration" on page 206
Memory configuration	Configures main memory settings	Enter	Opens the submenu See "Memory configuration" on page 209
USB configuration	Configures USB settings	Enter	Opens the submenu See "USB configuration" on page 212
Serial port console redirection	Configures the remote console	Enter	Opens the submenu See "Serial port console redirection" on page 216

Table 140: Advanced overview

1.4.1 Graphics configuration

```
Aptio Setup Utility - Copyright (C) 2012 American Megatrends, Inc.
Advanced

Primary Display                    [Auto]

Internal Graphics                  [Auto]
IGFX VBIOS Version                 2137
GTT Size                           [2MB]
Aperture Size                      [256MB]
DVMT Pre-Allocated                 [64MB]
DVMT Total Gfx Mem                 [256MB]
Gfx Low Power Mode                 [Disabled]
Graphics Performance Analyzers     [Disabled]

Primary IGFX Boot Display          [LFP]
Secondary IGFX Boot Display        [CRT]

Active LFP Configuration           [Integrated LVDS]
Always Try Auto Panel Detect       [No]
Local Flat Panel Type              [Auto]

Display Port B Interface           [Disabled]
Display Port C Interface           [Disabled]
Display Port D Interface           [HDMI/DVI]

Display Mode Persistance           [Disabled]

Select which of
IGFX/PEG/PCI Graphics
device should be Primary
Display or select SG for
Switchable Gfx.

↔: Select Screen
↑↓: Select Item
Enter: Select
+/-: Change Opt.
F1: General Help
F2: Previsous Values
F9: Optimized Defaults
F10: Save & Exit
ESC: Exit

Version 2.15.1226. Copyright (C) 2012 American Megatrends, Inc.
```

Figure 108: Advanced - Graphics configuration

BIOS setting	Function	Configuration options	Effect
Primary display	Option for selecting the primary display device	Auto	Configures the display device automatically
		IGD	Uses the internal graphics chip on the CPU board as the display device
		PEG	Uses an external PCI Express graphics card connected to the x16 PEG port as the display device
		PCI	Uses the graphics chip of a connected graphics card as the display device
Internal graphics	Option for configuring the internal graphics chip	Auto	Enables the internal graphics chip
		Disabled	Disables the internal graphics chip
		Enabled	Enables the internal graphics chip
IGFX VBIOS version	Displays the IGFX BIOS version	None	-
GTT size	Option for setting the GTT size	1 MB	1 MB GTT
		2 MB	2 MB GTT
Aperture size	Option for configuring the maximum amount of RAM made available to the main memory when graphics memory is full	128 M	Reserves 128 MB
		256 M	Reserves 256 MB
		512 M	Reserves 512 MB
DVMT pre-allocated	Option for setting the fixed amount of memory used for the internal graphics controller	32 MB, 64 MB, 96 MB up to 1024 MB	Defines the fixed graphic memory as a value between 32 and 1024 MB
DVMT total gfx mem	Option for setting the amount of memory that can be used for the internal graphics controller. Memory over the permanently assigned graphics memory is assigned dynamically according to the DVMT 5.0 standard.	128 M	Allocates 128 MB of main memory
		256 M	Allocates 256 MB of main memory
		MAX	Allocates the entire main memory
Gfx low power mode	Option for setting the power saving function for the graphics controller **Information:** **This option can only be used for SFF.**	Enabled	Enables low power mode. The graphics controller does not operate at full speed.
		Disabled	Disables low power mode
Graphics performance analyzers	Option for enabling/disabling the Intel graphics performance analyzers	Enabled	Enables this function
		Disabled	Disables this function
Primary IGFX boot display	Option for defining the primary enabled display device during booting.	VBIOS default	Uses the default setting from IGFX BIOS
		CRT	Uses the CRT (cathode ray tube) channel
		LFP	Uses the LFP (local flat panel) channel
		EFP	Uses the EFP (external flat panel) channel

Table 141: Advanced - Graphics configuration options

BIOS setting	Function	Configuration options	Effect
	Information: **The numbering of EFP occurs dynamically depending on the DisplayPort interface (B/C/D).**	EFP2	Uses the EFP2 (external flat panel 2) channel
		EFP3	Uses the EFP3 (external flat panel 3) channel
Secondary IGFX boot display	Option for defining the secondary enabled panel during POST **Information:** **The numbering of EFP occurs dynamically depending on the DisplayPort interface (B/C/D).** **Information:** **After the BIOS boot screen, nothing more is shown on this display until the graphics driver is reloaded from the operating system.**	Disabled	Disables this function Only shows POST on one display
		CRT	Uses the CRT (cathode ray tube) channel
		LFP	Uses the LFP (local flat panel) channel
		EFP	Uses the EFP (external flat panel) channel
		EFP2	Uses the EFP2 (external flat panel 2) channel
		EFP3	Uses the EFP3 (external flat panel 3) channel
Active LFP configuration	Option for selecting the active LFP (local flat panel) channel **Information:** **This option has no effect on the Automation PC 910.**	No local flat panel	Does not use the LVDS channel
		Integrated LVDS	Uses the integrated LVDS channel
Always try auto panel detect	This option first searches for EDID data in an external EEPROM to configure the LFP. If no EDID data is found, then the data selected under "Local flat panel type" is used.	No	Disables this function
		Yes	Enables this function
Local flat panel type	This option can be used to set a predefined profile for the LVDS channel.	Auto	Automatic detection and configuration using the EDID data
		VGA 1x18 (002h)	640 x 480
		VGA 1x18 (013h)	640 x 480
		SVGA 1x18 (01Ah)	800 x 600
		XGA 1x18 (006h)	1024 x 768
		XGA 2x18 (007h)	1024 x 768
		XGA 1x24 (008h)	1024 x 768
		XGA 2x24 (012h)	1024 x 768
		SXGA 2x24 (00Ah)	1280 x 1024
		SXGA 2x24 (018h)	1280 x 1024
		UXGA 2x24 (00Ch)	1600 x 1200
		Customized EDID 1	User-defined profile
		Customized EDID 2	User-defined profile
		Customized EDID 3	User-defined profile
Display Port B interface	Option for selecting the display device that is connected to the DisplayPort interface	Disabled	Disables the DisplayPort interface
		DisplayPort	Configures the DisplayPort interface as a DisplayPort interface
		HDMI/DVI	Configures the DisplayPort interface as an HDMI/DVI interface
Display Port C interface	Option for selecting the display device that is connected to the monitor/panel option	Disabled	Disables the monitor/panel option
		DisplayPort	Configures the monitor/panel option as a DisplayPort interface
		HDMI/DVI	Configures the monitor/panel option as an HDMI/DVI interface
Display Port D interface	Option for selecting the display device that is connected to the monitor/panel interface	Disabled	Disables the monitor/panel interface
		DisplayPort	Configures the monitor/panel interface as a DisplayPort interface **Information:** **This setting disables the monitor/panel interface.**
		HDMI/DVI	Configures the monitor/panel interface as an HDMI/DVI interface
Display mode persistence	"Display mode persistence" means that the operating system can remember and restore past display configurations. For example, a dual DVI configuration is automatically restored when both DVI monitors are reconnected, even if only one of them was connected and enabled during a previous boot.	Disabled	Disables this function
		Enabled	Enables this function

Table 141: Advanced - Graphics configuration options

1.4.2 OEM features

```
Aptio Setup Utility - Copyright (C) 2012 American Megatrends, Inc.
Advanced

Versions                                          Change some settings
Main BIOS Version                APC9R115         important for RT.
OEM BIOS Version
MTCX                             1.08

ETH1 MAC Address                 00:60:65:15:9C:5D
ETH2 MAC Address                 00:60:65:15:9C:6D

OEM String
Bernecker + Rainer Industrie-Elektronik Q1.15

Realtime Environment             [Disabled]        ↔: Select Screen
                                                   ↑↓: Select Item
▶ Super I/O Configuration                          Enter: Select
▶ CPU Board Features                               +/-: Change Opt.
▶ System Board Features                            F1: General Help
▶ Memory Module Features                           F2: Previsous Values
▶ Display Board Features                           F9: Optimized Defaults
▶ Bus Unit Features                                F10: Save & Exit
▶ I/O Board 1 Features                             ESC: Exit
▶ I/O Board 2 Features
▶ Fan Unit Features
▶ Slide-In 1 Features
▶ Panel Control Features

Version 2.15.1226. Copyright (C) 2012 American Megatrends, Inc.
```

Figure 109: Advanced - OEM features

BIOS setting	Function	Configuration options	Effect
Main BIOS version	Displays the installed B&R BIOS version	None	-
OEM BIOS version		None	-
MTCX	Displays the installed MTCX version	None	-
ETH1 MAC address	Displays the assigned MAC address for the ETH1 interface	None	-
ETH2 MAC address	Displays the assigned MAC address for the ETH2 interface	None	-
Real-time environment	Configures settings for real-time operating systems such as ARwin	Disabled	Disables this function
		Enabled	Disables hyper-threading, turbo mode and EIST. Also disables ASPM and the IRQ of root ports 2 and 3.
TI XIO2001 PCI bridge[1)]	Option for setting DMA access	Enabled	Optimizes DMA access
		Disabled	Disables this function
Super I/O configuration	Configures special interface settings	Enter	Opens the submenu See "Super I/O configuration" on page 174
CPU board features	Displays device-specific information for the CPU board	Enter	Opens the submenu See "CPU board features" on page 175
System board features	Displays device-specific information for the system unit	Enter	Opens the submenu See "System board features" on page 176
Memory module features	Displays device-specific information for the main memory	Enter	Opens the submenu See "Memory module features" on page 179
Display board features	Displays device-specific information about the Panel PC display.	Enter	Opens the submenu See "Display board features" on page 180
Bus unit features	Displays device-specific information for the bus unit	Enter	Opens the submenu See "Bus unit features" on page 183
I/O board 1 features[2)]	Displays device-specific information for interface option 1	Enter	Opens the submenu See "I/O board 1 features" on page 184
I/O board 2 features[2)]	Displays device-specific information for interface option 2	Enter	Opens the submenu See "I/O board 2 features" on page 186
Fan unit features[3)]	Displays device-specific information for the fan kit	Enter	Opens the submenu See "Fan unit features" on page 187

Table 142: Advanced - OEM features screen

BIOS setting	Function	Configuration options	Effect
Slide-in 1 features[4)]	Displays device-specific information for slide-in drive 1	Enter	Opens the submenu See "Slide-in 1 features" on page 189
Panel control features	Displays device-specific information for the connected panel	Enter	Opens the submenu See "Panel control features" on page 191

Table 142: Advanced - OEM features screen

1) This option is only shown if a bus unit with a PCI slot is installed.
2) This option is only shown if the corresponding option is installed in the system unit.
3) This option is only shown if a fan kit is installed in the system unit.
4) This option is only shown if a slide-in drive is installed in the bus unit.

1.4.2.1 Super I/O configuration

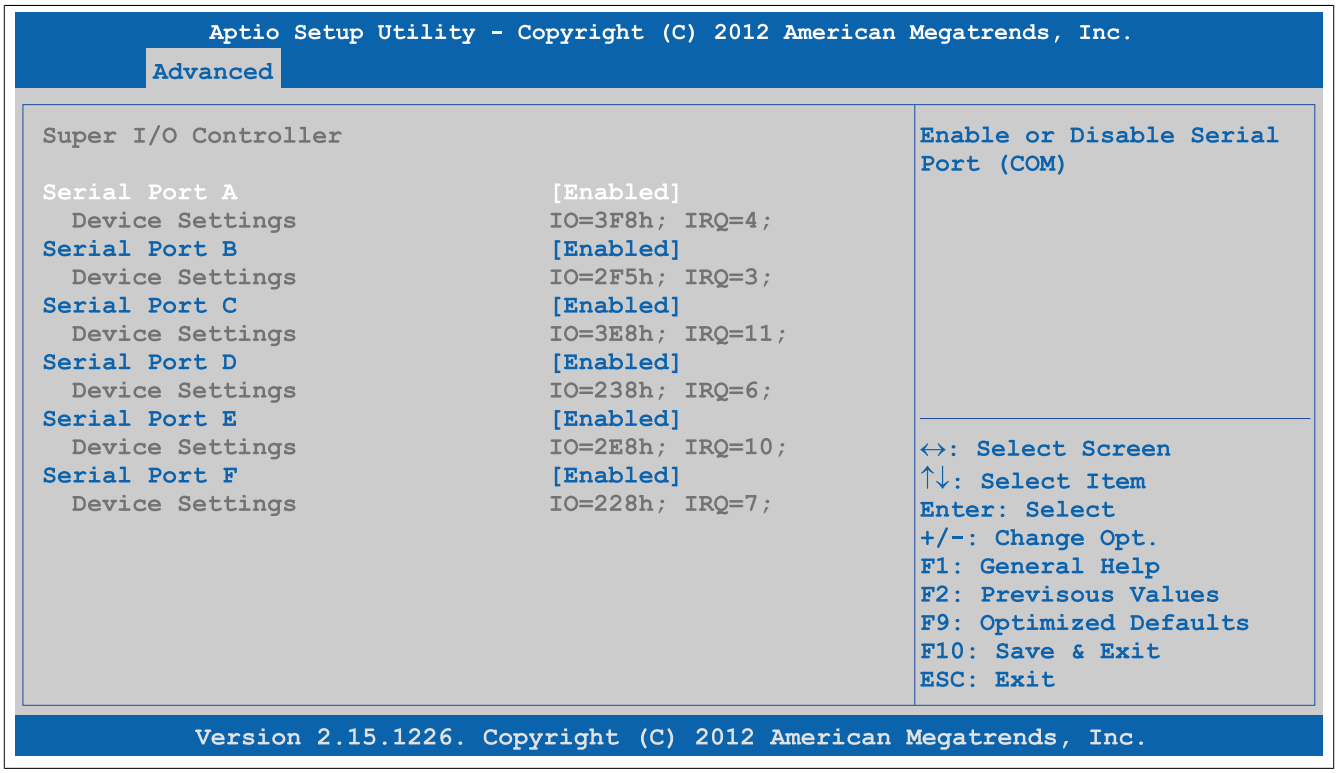

Figure 110: Advanced - OEM features - Super I/O configuration

BIOS setting	Function	Configuration options	Effect
Serial port A	Settings for the COM1 serial interface	Enabled	Enables the interface
		Disabled	Disables the interface
Device settings	Displays the I/O address and interrupt of the COM1 interface	None	-
Serial port B	Settings for the COM2 serial interface	Enabled	Enables the interface
		Disabled	Disables the interface
Device settings	Displays the I/O address and interrupt for the COM2 serial interface in the system.	None	-
Serial port C	Setting for the onboard touch screen.	Enabled	Enables the interface
		Disabled	Disables the interface
Device settings	Displays the I/O address and the interrupt for the onboard touch screen.	None	-
Serial port D	Setting for the touch screen of a connected panel.	Enabled	Enables the interface
		Disabled	Disables the interface
Device settings	Displays the I/O address and the interrupt for the touch screen of a connected panel.	None	-
Serial port E[1)]	Setting for the RS232 IF option in IF option slot 1	Enabled	Enables the interface
		Disabled	Disables the interface
Device settings	Displays the I/O address and interrupt for the RS232 IF option in IF option slot 1	None	-
Serial port F[1)]	Setting for the RS232 IF option in IF option slot 2	Enabled	Enables the interface
		Disabled	Disables the interface
Device settings	Displays the I/O address and interrupt for the RS232 IF option in IF option slot 2	None	-

Table 143: Advanced - OEM features - Super I/O configuration - Configuration options

BIOS setting	Function	Configuration options	Effect
CAN controller[1)]	Setting for the CAN IF option	Enabled	Enables the interface
		Disabled	Disables the interface
Device settings	Displays the I/O address and interrupt for the CAN IF option	None	-

Table 143: Advanced - OEM features - Super I/O configuration - Configuration options

1) This option is only shown if the corresponding IF option is installed in the system unit.

1.4.2.2 CPU board features

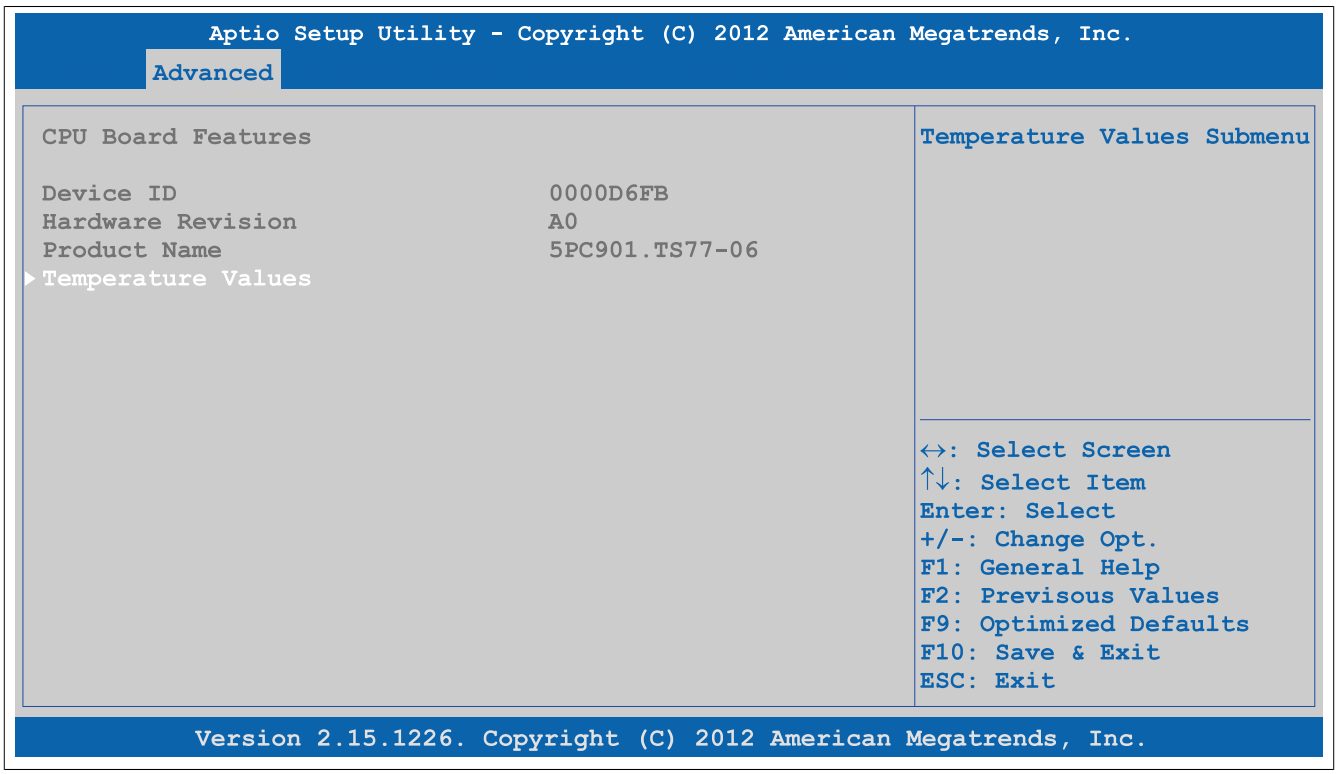

Figure 111: Advanced - OEM features - CPU board features

BIOS setting	Function	Configuration options	Effect
Device ID	Displays the device ID of the CPU board	None	-
Hardware revision	Displays the hardware revision of the CPU board	None	-
Product name	Displays the B&R model number	None	-
Temperature values	Displays current temperature values	Enter	Opens the submenu See "Temperature values" on page 176

Table 144: Advanced - OEM features - CPU board features

1.4.2.2.1 Temperature values

```
Aptio Setup Utility - Copyright (C) 2012 American Megatrends, Inc.
Advanced

Temperature Values

Live Temperature Values
  Sensor 1                          28 C / 85 F

                                    ↔: Select Screen
                                    ↑↓: Select Item
                                    Enter: Select
                                    +/-: Change Opt.
                                    F1: General Help
                                    F2: Previsous Values
                                    F9: Optimized Defaults
                                    F10: Save & Exit
                                    ESC: Exit

Version 2.15.1226. Copyright (C) 2012 American Megatrends, Inc.
```

Figure 112: Advanced - OEM features - CPU board features - Temperature values

BIOS setting	Function	Configuration options	Effect
Sensor 1	Displays the current temperature of sensor 1 (CPU) in °C and °F	None	-

Table 145: Advanced - OEM features - CPU board features - Temperature values

1.4.2.3 System board features

```
Aptio Setup Utility - Copyright (C) 2012 American Megatrends, Inc.
Advanced

System Board Features                          Statistical Values Submenu

Device ID                          0000D6DB
Compatibility ID                   0000
Vendor ID                          00000000
Hardware Revision                  A0
Serial Number                      D6DB0168424
Product Name                       5PC901.TS77-06
Parent Device ID                   FFFFFFFF
Parent Compatibility ID            FFFF
User Serial ID                     35434454

▶ Statistical Values               ↔: Select Screen
▶ Temperature Values               ↑↓: Select Item
▶ Voltage Values                   Enter: Select
                                   +/-: Change Opt.
                                   F1: General Help
                                   F2: Previsous Values
                                   F9: Optimized Defaults
                                   F10: Save & Exit
                                   ESC: Exit

Version 2.15.1226. Copyright (C) 2012 American Megatrends, Inc.
```

Figure 113: Advanced - OEM features - System board features

BIOS setting	Function	Configuration options	Effect
Device ID	Displays the device ID of the CPU board	None	-
Compatibility ID	Displays the version of the device within the same B&R device ID. This ID is needed for Automation Runtime.	None	-
Vendor ID	Displays the vendor ID	None	-
Hardware revision	Displays the hardware revision of the CPU board	None	-
Serial number	Displays the B&R serial number	None	-
Product name	Displays the B&R model number	None	-
Parent device ID	Displays the manufacturer number	None	-
Parent compatibility ID	Displays the manufacturer ID	None	-
User serial ID	Displays the user serial ID. This 8-digit hexadecimal value can be freely specified by the user (e.g. to give the device a unique ID) and can only be changed using the "B&R Control Center" included with the ADI driver.	None	-
Statistical values	Displays statistical values	Enter	Opens the submenu See "Statistical values" on page 177
Temperature values	Displays current temperature values	Enter	Opens the submenu See "Temperature values" on page 178
Voltage control	Displays current battery properties	Enter	Opens the submenu See "Voltage values" on page 179

Table 146: Advanced - OEM features - System board features

1.4.2.3.1 Statistical values

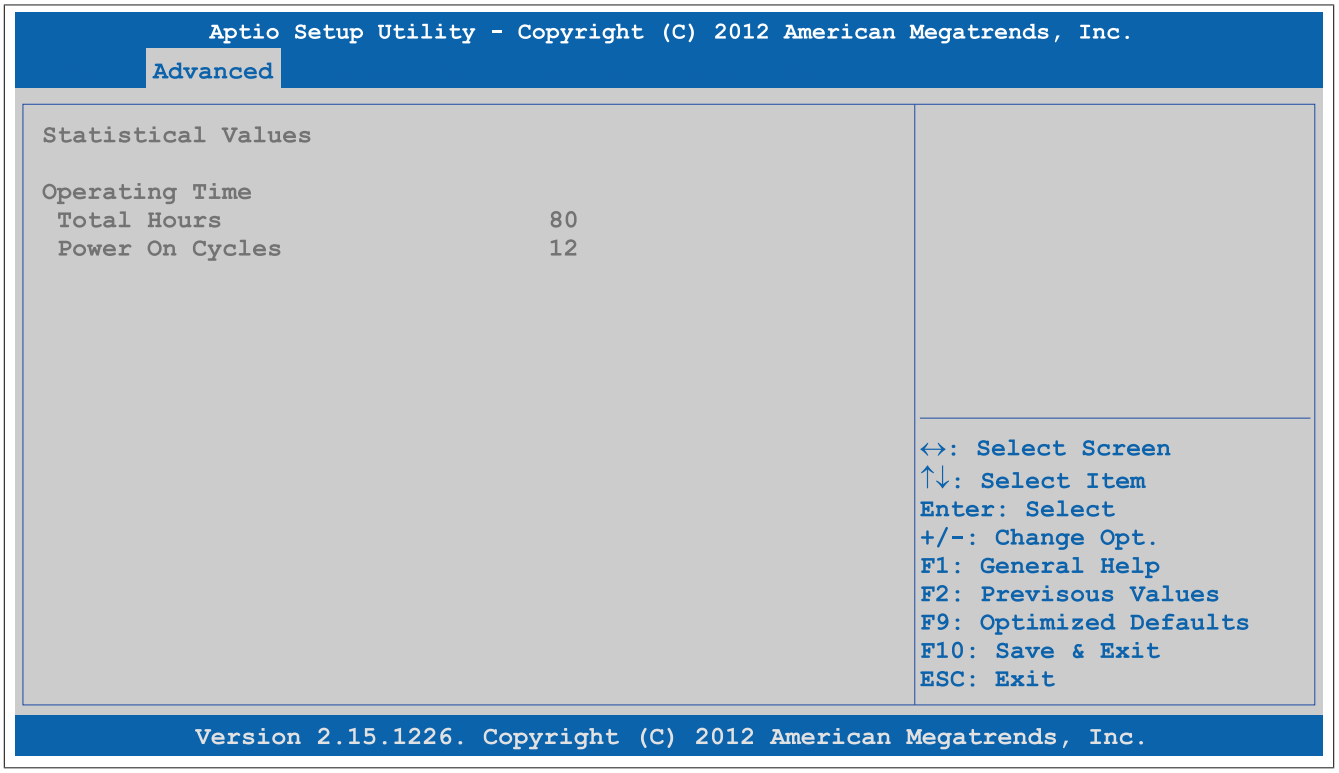

Figure 114: Advanced - OEM Features - System Board Features - Statistical Values

BIOS setting	Function	Configuration options	Effect
Total hours	Displays the runtime in hours	None	-
Power on cycles	Displays the number of power-on cycles. Each restart increases the counter by one.	None	-

Table 147: Advanced - OEM features - System board features - Statistical values

1.4.2.3.2 Temperature values

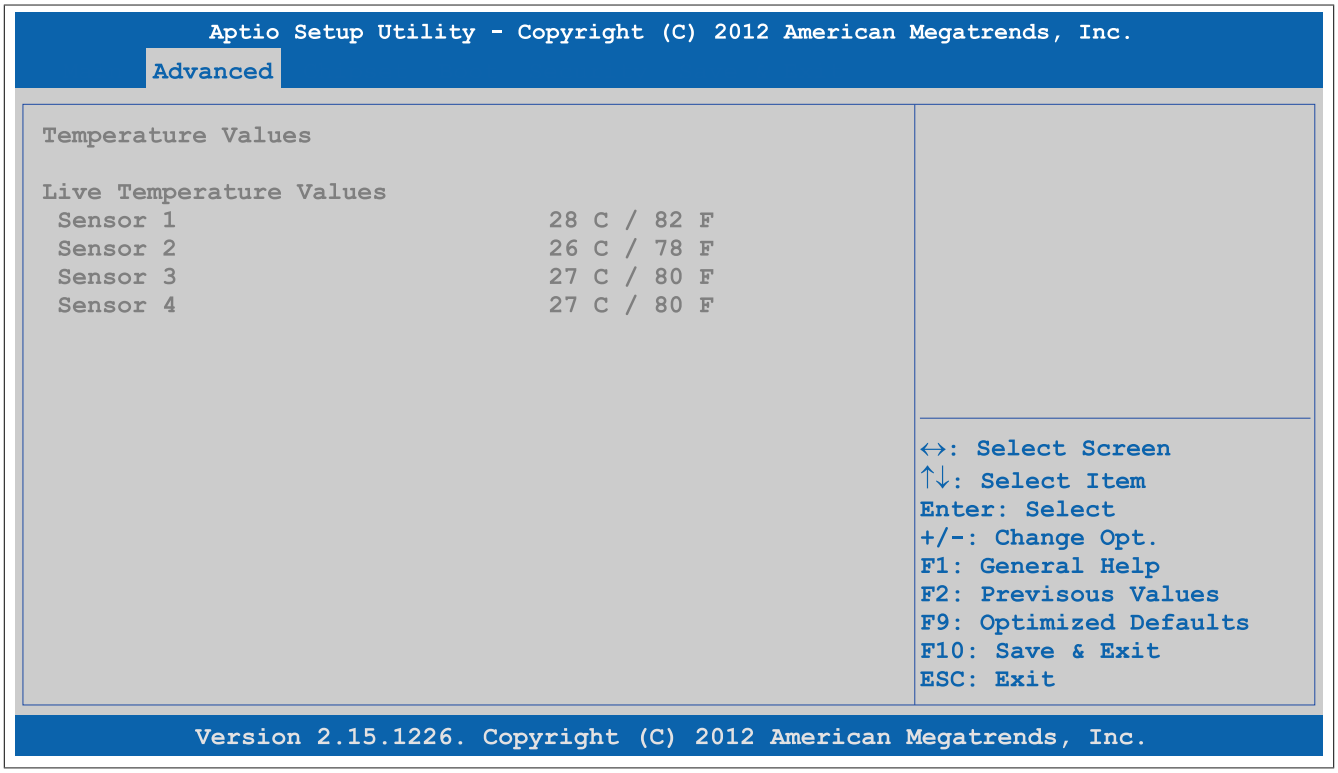

Figure 115: Advanced - OEM features - System board features - Temperature values

BIOS setting	Function	Configuration options	Effect
Sensor 1	Displays the current temperature of sensor 1 (board) in °C and °F	None	-
Sensor 2	Displays the current temperature of sensor 2 (chipset) in °C and °F	None	-
Sensor 3	Displays the current temperature of sensor 3 (board power supply) in °C and °F	None	-
Sensor 4	Displays the current temperature of sensor 4 (CFast) in °C and °F	None	-

Table 148: Advanced - OEM features - System board features - Temperature values

1.4.2.3.3 Voltage values

```
Aptio Setup Utility - Copyright (C) 2012 American Megatrends, Inc.
Advanced

Voltage Values

Battery Voltage                    3.09V
Battery State                      GOOD

                                   ↔: Select Screen
                                   ↑↓: Select Item
                                   Enter: Select
                                   +/-: Change Opt.
                                   F1: General Help
                                   F2: Previsous Values
                                   F9: Optimized Defaults
                                   F10: Save & Exit
                                   ESC: Exit

Version 2.15.1226. Copyright (C) 2012 American Megatrends, Inc.
```

Figure 116: Advanced - OEM Features - System Board Features - Voltage Values

BIOS setting	Function	Configuration options	Effect
Battery voltage	Displays the battery voltage in volts	None	-
Battery state	Displays the status of the battery	None	-

Table 149: Advanced - OEM features - System board features - Voltage values

1.4.2.4 Memory module features

```
Aptio Setup Utility - Copyright (C) 2012 American Megatrends, Inc.
Advanced

Memory Module Features

Socket 1 Module:
Serial Number                      01234567890
Product Name                       DDRID-SGN02G64D2BD1SA-D

Socket 2 Module:
Serial Number                      01234567890
Product Name                       DDRID-SGN02G64D2BD1SA-D

                                   ↔: Select Screen
                                   ↑↓: Select Item
                                   Enter: Select
                                   +/-: Change Opt.
                                   F1: General Help
                                   F2: Previsous Values
                                   F9: Optimized Defaults
                                   F10: Save & Exit
                                   ESC: Exit

Version 2.15.1226. Copyright (C) 2012 American Megatrends, Inc.
```

Figure 117: Advanced - OEM features - Memory module features

BIOS setting	Function	Configuration options	Effect
Socket 1 module			
Serial number	Displays the B&R serial number	None	-
Product name	Displays the product number	None	-
Socket 2 module			
Serial number	Displays the B&R serial number	None	-
Product name	Displays the product number	None	-

Table 150: Advanced - OEM features - Memory module features

1.4.2.5 Display board features

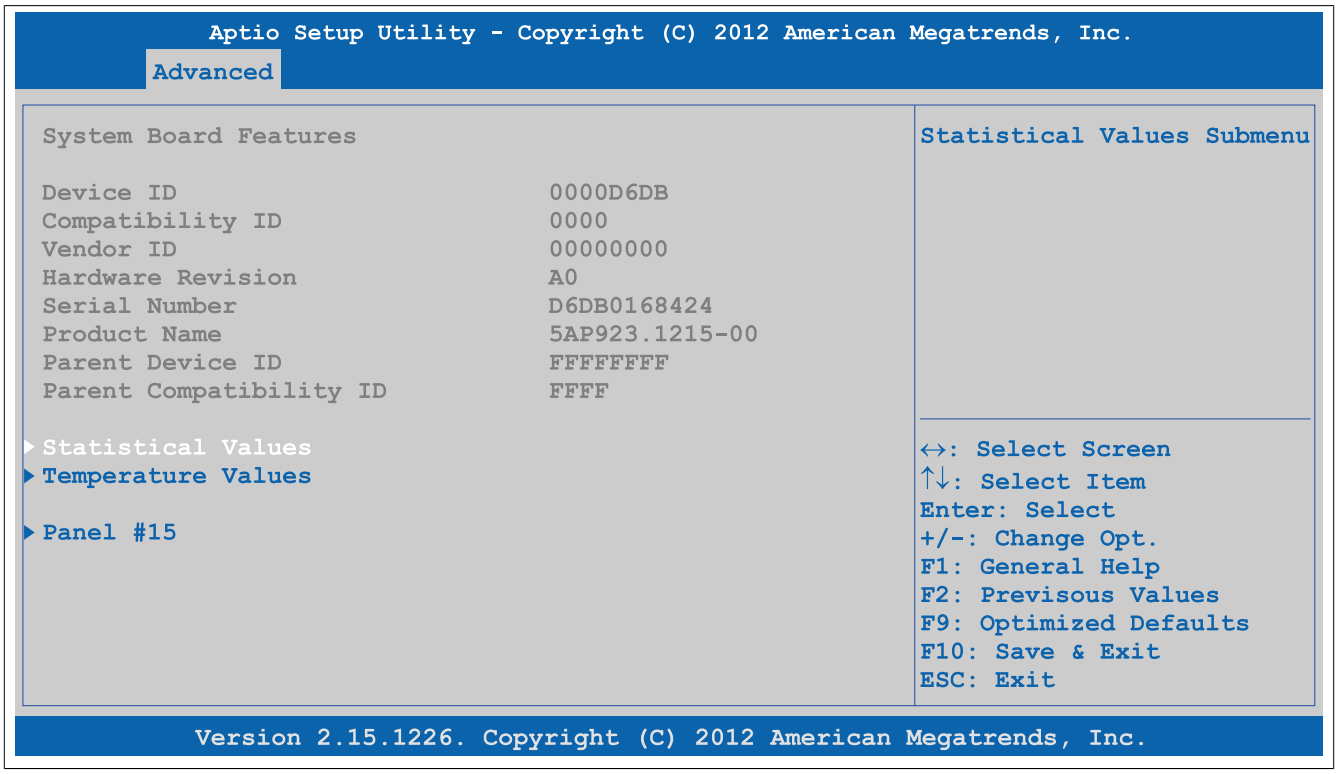

Figure 118: Advanced - OEM features - Display board features

BIOS setting	Function	Configuration options	Effect
Device ID	Displays the device ID of the display unit	None	-
Compatibility ID	Displays the version of the device within the same B&R device ID. This ID is needed for Automation Runtime.	None	-
Vendor ID	Displays the vendor ID	None	-
Hardware revision	Displays the hardware revision of the display unit	None	-
Serial number	Displays the B&R serial number	None	-
Product name	Displays the B&R model number	None	-
Parent device ID	Displays the manufacturer number	None	-
Parent compatibility ID	Displays the manufacturer ID	None	-
Statistical values	Displays statistical values	Enter	Opens the submenu See "Statistical values" on page 181
Temperature values	Displays current temperature values	Enter	Opens the submenu See "Temperature values" on page 181
Panel #15	Displays the panel properties of the display unit	Enter	Opens the submenu See "Panel #15" on page 182

Table 151: Advanced - OEM features - Display board features

1.4.2.5.1 Statistical values

```
Aptio Setup Utility - Copyright (C) 2012 American Megatrends, Inc.
Advanced

Statistical Values

Operating Time
 Total Hours                    80
 Power On Cycles                12

                                  ↔: Select Screen
                                  ↑↓: Select Item
                                  Enter: Select
                                  +/-: Change Opt.
                                  F1: General Help
                                  F2: Previsous Values
                                  F9: Optimized Defaults
                                  F10: Save & Exit
                                  ESC: Exit

Version 2.15.1226. Copyright (C) 2012 American Megatrends, Inc.
```

Figure 119: Advanced - OEM features - Display board features - Statistical values

BIOS setting	Function	Configuration options	Effect
Total hours	Displays the runtime in hours	None	-
Power on cycles	Displays the number of power-on cycles. Each restart increases the counter by one.	None	-

Table 152: Advanced - OEM features - Display board features - Statistical values

1.4.2.5.2 Temperature values

```
Aptio Setup Utility - Copyright (C) 2012 American Megatrends, Inc.
Advanced

Temperature Values

Live Temperature Values
 Sensor 1                       28 C / 82 F

                                  ↔: Select Screen
                                  ↑↓: Select Item
                                  Enter: Select
                                  +/-: Change Opt.
                                  F1: General Help
                                  F2: Previsous Values
                                  F9: Optimized Defaults
                                  F10: Save & Exit
                                  ESC: Exit

Version 2.15.1226. Copyright (C) 2012 American Megatrends, Inc.
```

Figure 120: Advanced - OEM features - Display board features - Temperature values

BIOS setting	Function	Configuration options	Effect
Sensor 1	Displays the current temperature of sensor 1 (display unit) in °C and °F	None	-

Table 153: Advanced - OEM features - Display board features - Temperature values

1.4.2.5.3 Panel #15

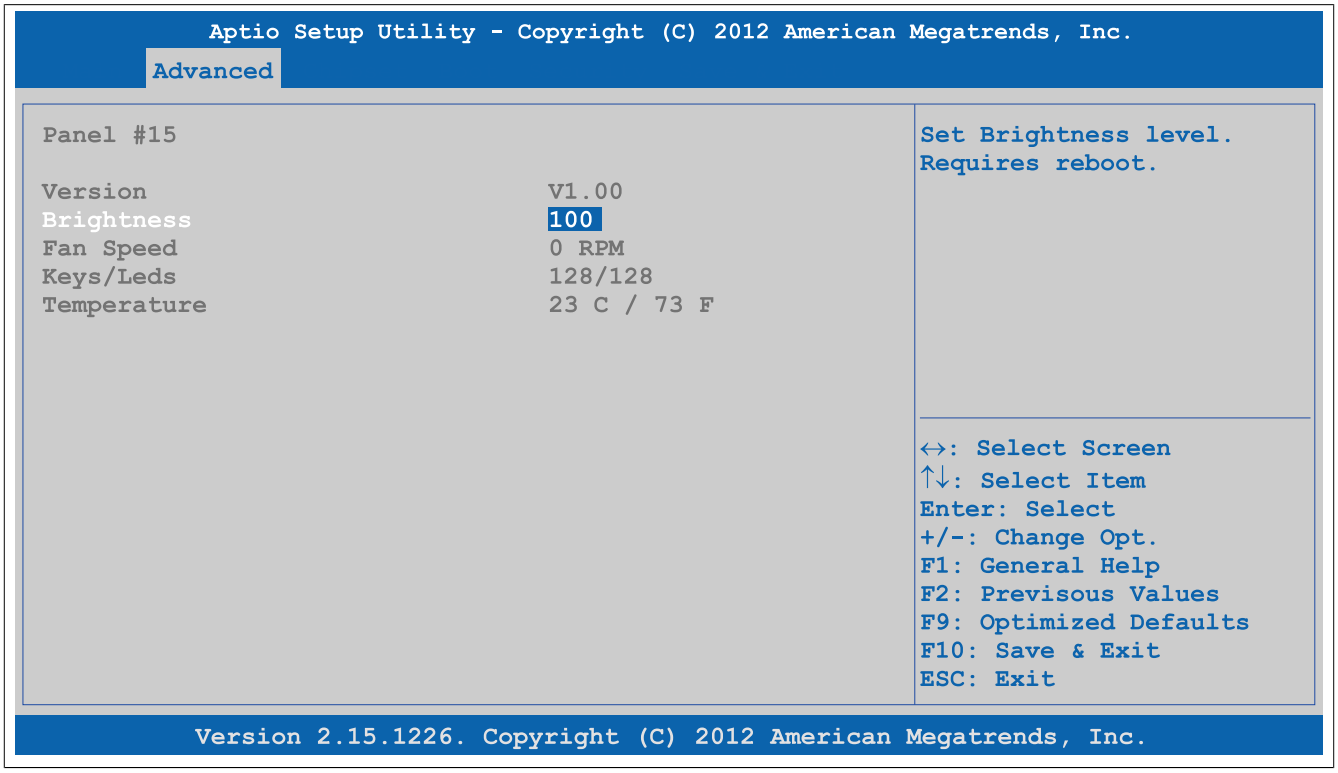

Figure 121: Advanced - OEM features - Display board features - Panel #15

BIOS setting	Function	Configuration options	Effect
Version	Displays the firmware revision.	None	-
Brightness	Setting for the brightness of the display unit	0 to 100	Sets the brightness (in %) of the selected panel. Settings take effect immediately.
Fan speed	Displays the fan speed of the display unit	None	-
Keys/LEDs	Displays the available keys and LEDs for the display unit	None	-
Temperature	Displays the temperature of the display unit in °C and °F	None	-

Table 154: Advanced - OEM features - Display board features - Panel #15

1.4.2.6 Bus unit features

```
Aptio Setup Utility - Copyright (C) 2012 American Megatrends, Inc.
Advanced

Bus Unit Features                                   Statistical Values Submenu

Device ID                          0000D6DF
Compatibility ID                   0000
Vendor ID                          00000000
Hardware Revision                  A0
Serial Number                      D6DF0168425
Product Name                       5PC901.BX02-01
Parent Device ID                   FFFFFFFF
Parent Compatibility ID            FFFF

> Statistical Values                                ↔: Select Screen
                                                    ↑↓: Select Item
                                                    Enter: Select
                                                    +/-: Change Opt.
                                                    F1: General Help
                                                    F2: Previsous Values
                                                    F9: Optimized Defaults
                                                    F10: Save & Exit
                                                    ESC: Exit

Version 2.15.1226. Copyright (C) 2012 American Megatrends, Inc.
```

Figure 122: Advanced - OEM Features - Bus Unit Features

BIOS setting	Function	Configuration options	Effect
Device ID	Displays the device ID of the bus unit	None	-
Compatibility ID	Displays the version of the device within the same B&R device ID. This ID is needed for Automation Runtime.	None	-
Vendor ID	Displays the vendor ID	None	-
Hardware revision	Displays the hardware revision of the bus unit	None	-
Serial number	Displays the B&R serial number	None	-
Product name	Displays the B&R model number	None	-
Parent device ID	Displays the manufacturer number	None	-
Parent compatibility ID	Displays the manufacturer ID	None	-
Statistical values	Displays statistical values	Enter	Opens the submenu See "Statistical values" on page 184

Table 155: Advanced - OEM features - Bus unit features

1.4.2.6.1 Statistical values

```
Aptio Setup Utility - Copyright (C) 2012 American Megatrends, Inc.
Advanced

Statistical Values

Operating Time
 Total Hours                    80
 Power On Cycles                12

                                  ↔: Select Screen
                                  ↑↓: Select Item
                                  Enter: Select
                                  +/-: Change Opt.
                                  F1: General Help
                                  F2: Previsous Values
                                  F9: Optimized Defaults
                                  F10: Save & Exit
                                  ESC: Exit

Version 2.15.1226. Copyright (C) 2012 American Megatrends, Inc.
```

Figure 123: Advanced - OEM Features - Bus Unit Features - Statistical Values

BIOS setting	Function	Configuration options	Effect
Total hours	Displays the runtime in hours	None	-
Power on cycles	Displays the number of power-on cycles. Each restart increases the counter by one.	None	-

Table 156: Advanced - OEM features - Bus unit features - Statistical values

1.4.2.7 I/O board 1 features

```
Aptio Setup Utility - Copyright (C) 2012 American Megatrends, Inc.
Advanced

I/O Board 1 Features                    Statistical Values Submenu

Device ID                       0000D6DF
Compatibility ID                0000
Vendor ID                       00000000
Hardware Revision               A0
Serial Number                   D6DF0168425
Product Name                    5AC901.I485-00
Parent Device ID                FFFFFFFF
Parent Compatibility ID         FFFF

▶ Statistical Values                    ↔: Select Screen
                                        ↑↓: Select Item
                                        Enter: Select
                                        +/-: Change Opt.
                                        F1: General Help
                                        F2: Previsous Values
                                        F9: Optimized Defaults
                                        F10: Save & Exit
                                        ESC: Exit

Version 2.15.1226. Copyright (C) 2012 American Megatrends, Inc.
```

Figure 124: Advanced - OEM features - I/O board 1 features

BIOS setting	Function	Configuration options	Effect
Device ID	Displays the device ID of IF option 1	None	-
Compatibility ID	Displays the version of the device within the same B&R device ID. This ID is needed for Automation Runtime.	None	-
Vendor ID	Displays the vendor ID	None	-
Hardware revision	Displays the hardware revision of IF option 1	None	-
Serial number	Displays the B&R serial number	None	-
Product name	Displays the B&R model number	None	-
Parent device ID	Displays the manufacturer number	None	-
Parent compatibility ID	Displays the manufacturer ID	None	-
Statistical values	Displays statistical values	Enter	Opens the submenu See "Statistical values" on page 185

Table 157: Advanced - OEM features - I/O board 1 features

1.4.2.7.1 Statistical values

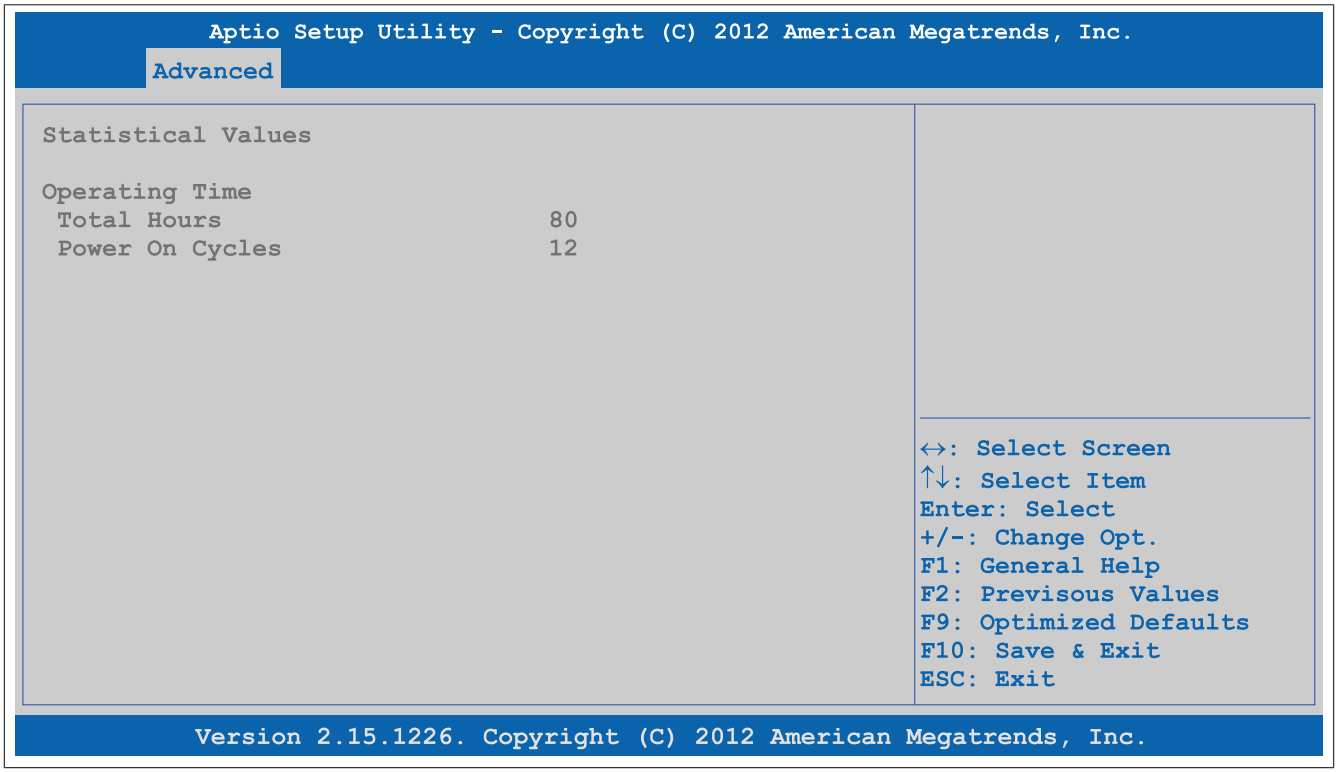

Figure 125: Advanced - OEM features - I/O board 1 features - Statistical values

BIOS setting	Function	Configuration options	Effect
Total hours	Displays the runtime in hours	None	-
Power on cycles	Displays the number of power-on cycles. Each restart increases the counter by one.	None	-

Table 158: Advanced - OEM features - I/O board 1 features - Statistical values

1.4.2.8 I/O board 2 features

```
Aptio Setup Utility - Copyright (C) 2012 American Megatrends, Inc.
Advanced

I/O Board 2 Features                                  Statistical Values Submenu

Device ID                          0000D6DF
Compatibility ID                   0000
Vendor ID                          00000000
Hardware Revision                  A0
Serial Number                      D6DF0168425
Product Name                       5AC901.ICAN-00
Parent Device ID                   FFFFFFFF
Parent Compatibility ID            FFFF

> Statistical Values                                  ↔: Select Screen
                                                      ↑↓: Select Item
                                                      Enter: Select
                                                      +/-: Change Opt.
                                                      F1: General Help
                                                      F2: Previsous Values
                                                      F9: Optimized Defaults
                                                      F10: Save & Exit
                                                      ESC: Exit

Version 2.15.1226. Copyright (C) 2012 American Megatrends, Inc.
```

Figure 126: Advanced - OEM features - I/O board 2 features

BIOS setting	Function	Configuration options	Effect
Device ID	Displays the device ID of IF option 2	None	-
Compatibility ID	Displays the version of the device within the same B&R device ID. This ID is needed for Automation Runtime.	None	-
Vendor ID	Displays the vendor ID	None	-
Hardware revision	Displays the hardware revision of IF option 2	None	-
Serial number	Displays the B&R serial number	None	-
Product name	Displays the B&R model number	None	-
Parent device ID	Displays the manufacturer number	None	-
Parent compatibility ID	Displays the manufacturer ID	None	-
Statistical values	Displays statistical values	Enter	Opens the submenu See "Statistical values" on page 187

Table 159: Advanced - OEM features - I/O board 2 features

1.4.2.8.1 Statistical values

```
Aptio Setup Utility - Copyright (C) 2012 American Megatrends, Inc.
Advanced

Statistical Values

Operating Time
 Total Hours                    80
 Power On Cycles                12

                                ↔: Select Screen
                                ↑↓: Select Item
                                Enter: Select
                                +/-: Change Opt.
                                F1: General Help
                                F2: Previsous Values
                                F9: Optimized Defaults
                                F10: Save & Exit
                                ESC: Exit

Version 2.15.1226. Copyright (C) 2012 American Megatrends, Inc.
```

Figure 127: Advanced - OEM features - I/O board 2 features - Statistical values

BIOS setting	Function	Configuration options	Effect
Total hours	Displays the runtime in hours	None	-
Power on cycles	Displays the number of power-on cycles. Each restart increases the counter by one.	None	-

Table 160: Advanced - OEM features - I/O board 2 features - Statistical values

1.4.2.9 Fan unit features

```
Aptio Setup Utility - Copyright (C) 2012 American Megatrends, Inc.
Advanced

Fan Unit Features                                Statistical Values Submenu

Device ID                       0000D6DF
Compatibility ID                0000
Vendor ID                       00000000
Hardware Revision               A0
Serial Number                   D6DF0168425
Product Name                    5AC910.FA01-00
Parent Device ID                FFFFFFFF
Parent Compatibility ID         FFFF

Fan Control                     [Auto]           ↔: Select Screen
                                                 ↑↓: Select Item
▶ Statistical Values                             Enter: Select
▶ RPM Values                                     +/-: Change Opt.
                                                 F1: General Help
                                                 F2: Previsous Values
                                                 F9: Optimized Defaults
                                                 F10: Save & Exit
                                                 ESC: Exit

Version 2.15.1226. Copyright (C) 2012 American Megatrends, Inc.
```

Figure 128: Advanced - OEM features - Fan unit features

BIOS setting	Function	Configuration options	Effect
Device ID	Displays the device ID of the fan kit	None	-
Compatibility ID	Displays the version of the device within the same B&R device ID. This ID is needed for Automation Runtime.	None	-
Vendor ID	Displays the vendor ID	None	-
Hardware revision	Displays the hardware revision of the fan kit	None	-
Serial number	Displays the B&R serial number	None	-
Product name	Displays the B&R model number	None	-
Parent device ID	Displays the manufacturer number	None	-
Parent compatibility ID	Displays the manufacturer ID	None	-
Fan control	Option for setting the fan control **Information:** **It is not possible for a manual fan setting to take effect when starting back up from S3 mode. The setting "Auto" is active.**	Auto	Automatic fan control
		Minimum	Sets the minimum revolution speed. If the temperature increases, however, the fan adjusts its speed automatically to prevent critical temperatures from being exceeded.
		25%	Sets 25% of the maximum revolution speed
		50%	Sets 50% of the maximum revolution speed
		75%	Sets 75% of the maximum revolution speed
		Maximum	Sets the maximum revolution speed
Statistical values	Displays statistical values	Enter	Opens the submenu See "Statistical values" on page 188
RPM values	Displays the speed (in RPM) of the individual fans in the fan kit	Enter	Opens the submenu See "RPM values" on page 189

Table 161: Advanced - OEM features - Fan unit features

1.4.2.9.1 Statistical values

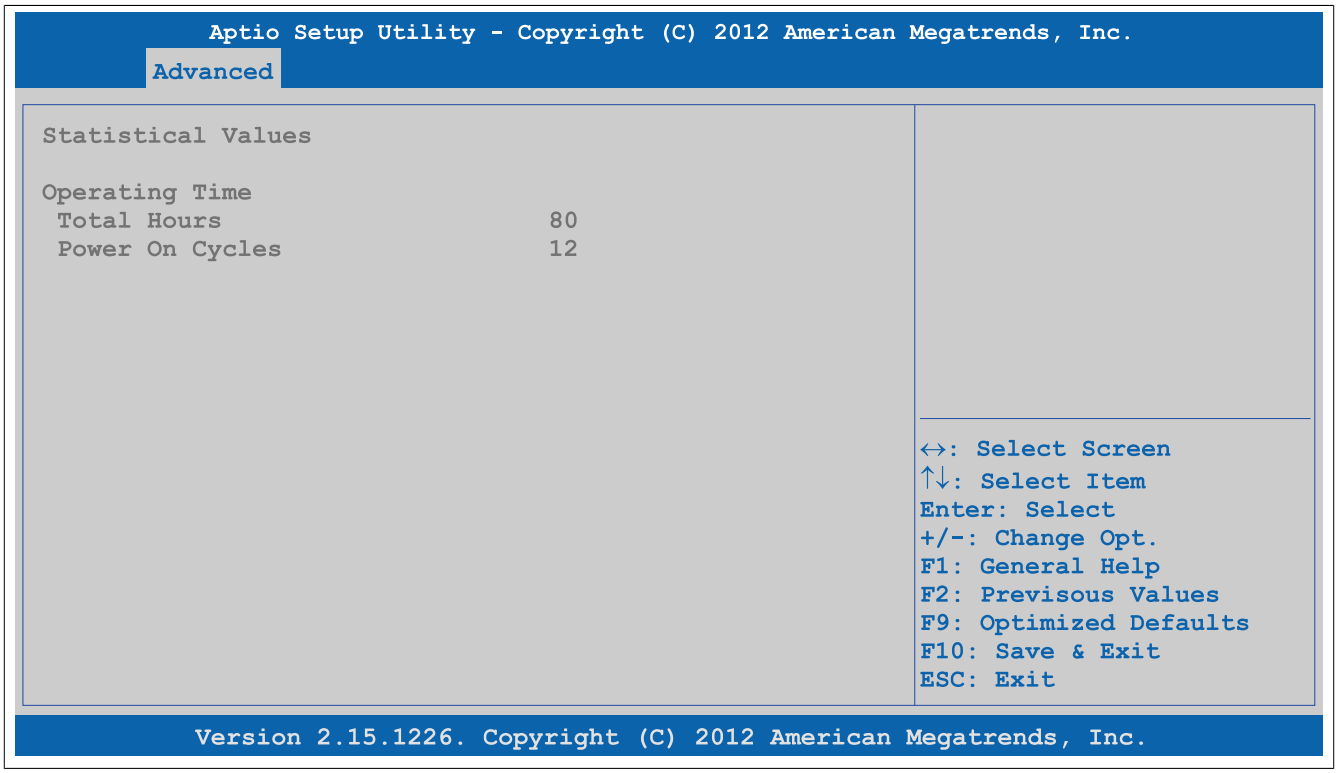

Figure 129: Advanced - OEM features - Fan unit features - Statistical values

BIOS setting	Function	Configuration options	Effect
Total hours	Displays the runtime in hours	None	-
Power on cycles	Displays the number of power-on cycles. Each restart increases the counter by one.	None	-

Table 162: Advanced - OEM features - Fan unit features - Statistical values

1.4.2.9.2 RPM values

```
Aptio Setup Utility - Copyright (C) 2012 American Megatrends, Inc.
Advanced

RPM Values

Live Fan Revolution Values
  Fan 1                          435 RPM
  Fan 2                          423 RPM
  Fan 3                          217 RPM
  Fan 4                          435 RPM

                                 ↔: Select Screen
                                 ↑↓: Select Item
                                 Enter: Select
                                 +/-: Change Opt.
                                 F1: General Help
                                 F2: Previsous Values
                                 F9: Optimized Defaults
                                 F10: Save & Exit
                                 ESC: Exit

Version 2.15.1226. Copyright (C) 2012 American Megatrends, Inc.
```

Figure 130: Advanced - OEM features - Fan unit features - RPM values

BIOS setting	Function	Configuration options	Effect
Fan 1	Displays the current speed of fan 1 in RPM	None	-
Fan 2	Displays the current speed of fan 2 in RPM	None	-
Fan 3	Displays the current speed of fan 3 in RPM	None	-
Fan 4	Displays the current speed of fan 4 in RPM	None	-

Table 163: Advanced - OEM features - Fan unit features - RPM values

1.4.2.10 Slide-in 1 features

```
Aptio Setup Utility - Copyright (C) 2012 American Megatrends, Inc.
Advanced

Slide-In 1 Features                          Temperature Values Submenu

Device ID                        0000DBFA
Compatibility ID                 0000
Vendor ID                        00000000
Hardware Revision                A0
Serial Number                    DBFA01000000
Product Name                     5AC901.SSCA-00
Parent Device ID                 FFFFFFFF
Parent Compatibility ID          FFFF

▶ Temperature Values                         ↔: Select Screen
                                             ↑↓: Select Item
                                             Enter: Select
                                             +/-: Change Opt.
                                             F1: General Help
                                             F2: Previsous Values
                                             F9: Optimized Defaults
                                             F10: Save & Exit
                                             ESC: Exit

Version 2.15.1226. Copyright (C) 2012 American Megatrends, Inc.
```

Figure 131: Advanced - OEM Features - Slide-in 1 features

BIOS setting	Function	Configuration options	Effect
Device ID	Displays the device ID of the slide-in 1 drive	None	-
Compatibility ID	Displays the version of the device within the same B&R device ID. This ID is needed for Automation Runtime.	None	-
Vendor ID	Displays the vendor ID	None	-
Hardware revision	Displays the hardware revision of the slide-in drive	None	-
Serial number	Displays the B&R serial number	None	-
Product name	Displays the B&R model number	None	-
Parent device ID	Displays the manufacturer number	None	-
Parent compatibility ID	Displays the manufacturer ID	None	-
User serial ID	Displays the user serial ID. This 8-digit hexadecimal value can be freely specified by the user (e.g. to give the device a unique ID) and can only be changed using the "B&R Control Center" included with the ADI driver.	None	-
Temperature values	Displays current temperature values	Enter	Opens the submenu See "Temperature values" on page 190

Table 164: Advanced - OEM Features - Slide-in 1 features

1.4.2.10.1 Temperature values

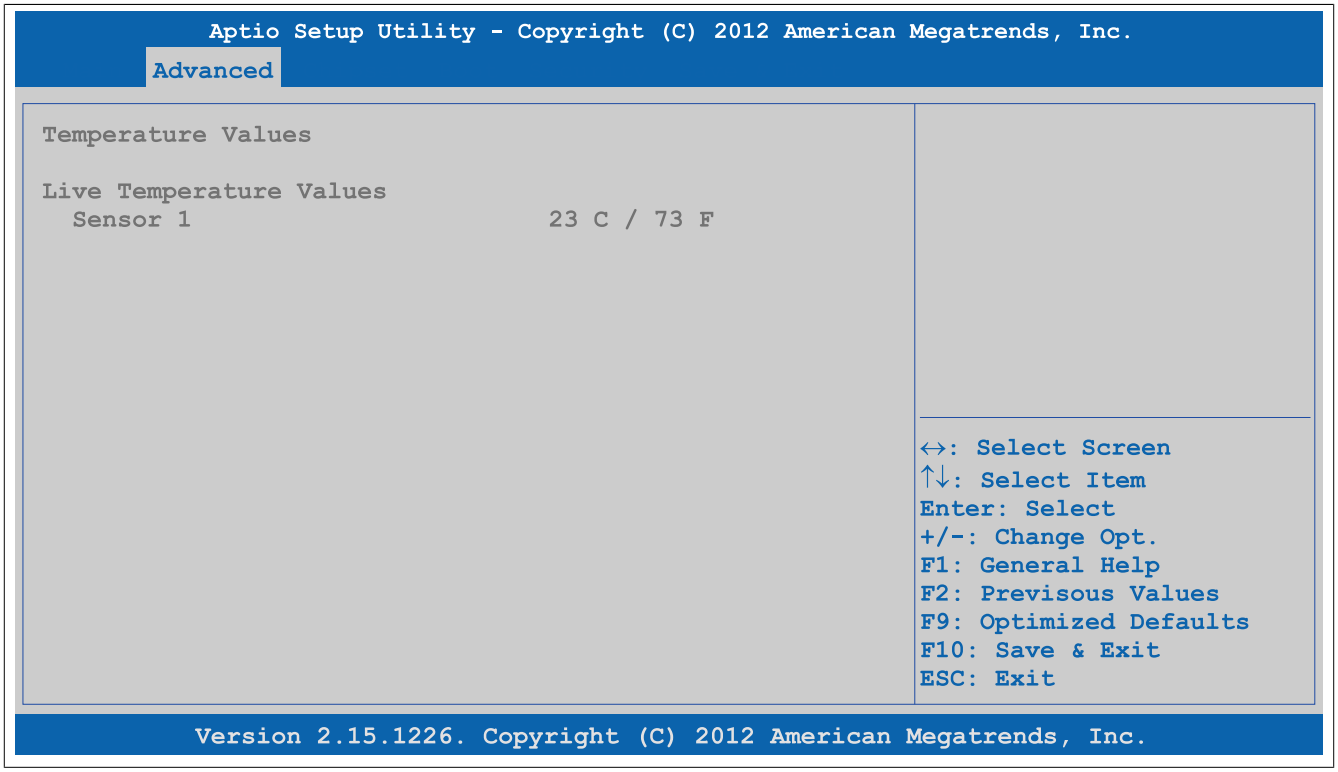

Figure 132: Advanced - OEM features - Slide-in 1 features - Temperature values

BIOS setting	Function	Configuration options	Effect
Sensor 1	Displays the current temperature of sensor 1 (slide-in 1 drive) in °C and °F	None	-

Table 165: Advanced - OEM features - Slide-in 1 features - Temperature values

1.4.2.11 Panel control features

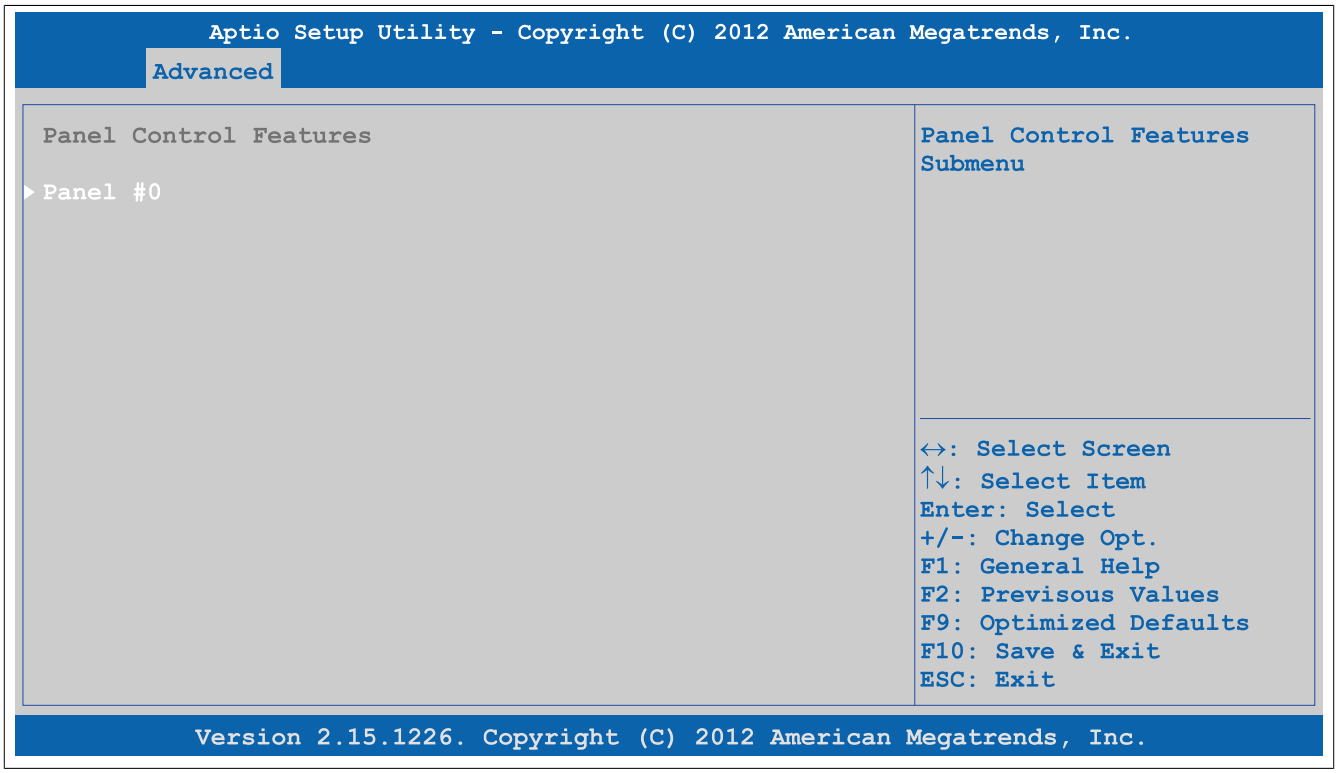

Figure 133: Advanced - OEM Features - Panel Control Features

BIOS setting	Function	Configuration options	Effect
Panel #X	Displays the panel properties of the connected panel	Enter	Opens the submenu See "Panel #X" on page 191

Table 166: Advanced - OEM features - Panel control features

1.4.2.11.1 Panel #X

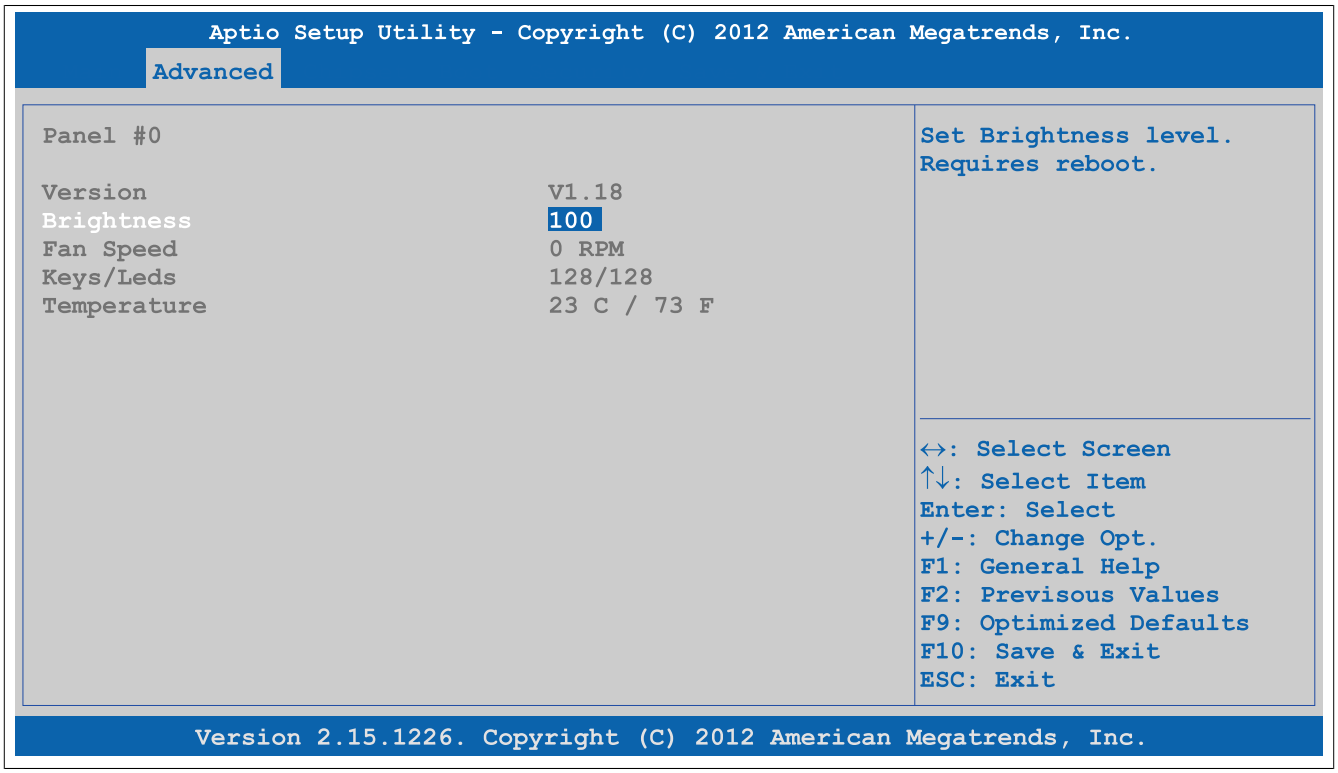

Figure 134: Advanced - OEM Features - Panel Control Features - Panel #x

BIOS setting	Function	Configuration options	Effect
Version	Displays the firmware version of the SDLR controller	None	-
Brightness	Setting for the brightness of the panel	0 to 100	Sets the brightness (in %) of the selected panel. Settings take effect immediately.
Fan speed	Displays the fan speed of the panel	None	-
Keys/LEDs	Displays the available keys and LEDs for the panel	None	-
Temperature	Displays the temperature of the panel in °C and °F	None	-

Table 167: Advanced - OEM features - Panel control features - Panel #X

1.4.3 PCI configuration

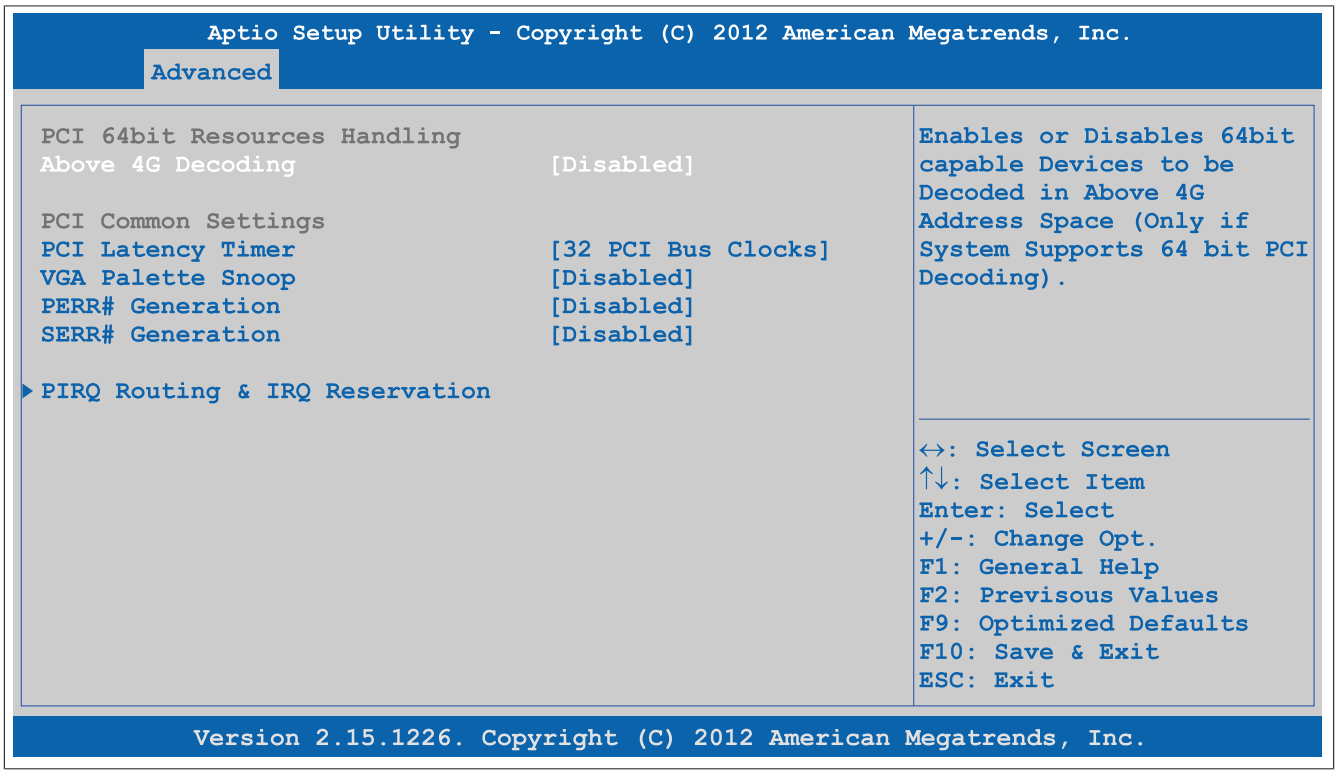

Figure 135: Advanced - PCI Configuration

BIOS setting	Function	Configuration options	Effect
Above 4G decoding	Option for enabling/disabling 64-bit capable devices to decode them in the address space above 4 GB (only if the system supports 64-bit decoding)	Disabled	Disables this function
		Enabled	Enables this function
PCI latency timer	Option for controlling how long (in PCI ticks) one PCI bus card can continue to use the master after another PCI card has requested access	32 PCI bus clocks to 248 PCI bus clocks	Manually sets the value in PCI ticks
VGA palette snoop	Option for supporting graphics cards with 256 colors. This option should only be set to "Enabled" if colors are not displayed correctly.	Disabled	Disables this function
		Enabled	Enables this function
PERR# generation	Option for generating a PERR signal (parity error). This signal indicates a data parity error one cycle after *PAR*.	Disabled	Disables this function
		Enabled	Enables this function
SERR# generation	Option for generating a SERR signal (system error). This signal indicates a data error or other type of system error when executing a special cycle command.	Disabled	Disables this function
		Enabled	Enables this function
PIRQ routing & IRQ reservation	Configures PIRQ routing	Enter	Opens the submenu See "PIRQ routing & IRQ reservation" on page 193

Table 168: Advanced - PCI configuration - Configuration options

1.4.3.1 PIRQ routing & IRQ reservation

```
Aptio Setup Utility - Copyright (C) 2012 American Megatrends, Inc.
Advanced

PIRQA                          [Auto]        Set interrupt for selected
PIRQB                          [Auto]        PIRQ. Please refer to the
PIRQC                          [Auto]        board's resource list for
PIRQD                          [Auto]        a detailed list of devices
PIRQE                          [Auto]        connected to the
PIRQF                          [Auto]        respective IRQ.
PIRQG                          [Auto]        NOTE: These settings will
PIRQH                          [Auto]        only be effective while
                                             operating in PIC (non-
Reserve Legacy Interrupt 1     [None]        IOAPCI) interrupt mode.
Reserve Legacy Interrupt 2     [None]
                                             ↔: Select Screen
                                             ↑↓: Select Item
                                             Enter: Select
                                             +/-: Change Opt.
                                             F1: General Help
                                             F2: Previsous Values
                                             F9: Optimized Defaults
                                             F10: Save & Exit
                                             ESC: Exit

Version 2.15.1226. Copyright (C) 2012 American Megatrends, Inc.
```

Figure 136: Advanced - PCI Configuration - PIRQ Routing & IRQ Reservation

BIOS setting	Function	Configuration options	Effect
PIRQA	Option for configuring PIRQ A	Auto	Automatic assignment by BIOS and the operating system
		IRQ3, IRQ4, IRQ5, IRQ6, IRQ10, IRQ11, IRQ14, IRQ15	Manual assignment
PIRQB	Option for configuring PIRQ B	Auto	Automatic assignment by BIOS and the operating system
		IRQ3, IRQ4, IRQ5, IRQ6, IRQ10, IRQ11, IRQ14, IRQ15	Manual assignment
PIRQC	Option for configuring PIRQ C	Auto	Automatic assignment by BIOS and the operating system
		IRQ3, IRQ4, IRQ5, IRQ6, IRQ10, IRQ11, IRQ14, IRQ15	Manual assignment
PIRQD	Option for configuring PIRQ D	Auto	Automatic assignment by BIOS and the operating system
		IRQ3, IRQ4, IRQ5, IRQ6, IRQ10, IRQ11, IRQ14, IRQ15	Manual assignment
PIRQE	Option for configuring PIRQ E	Auto	Automatic assignment by BIOS and the operating system
		IRQ3, IRQ4, IRQ5, IRQ6, IRQ10, IRQ11, IRQ14, IRQ15	Manual assignment
PIRQF	Option for configuring PIRQ F	Auto	Automatic assignment by BIOS and the operating system
		IRQ3, IRQ4, IRQ5, IRQ6, IRQ10, IRQ11, IRQ14, IRQ15	Manual assignment
PIRQG	Option for configuring PIRQ G	Auto	Automatic assignment by BIOS and the operating system
		IRQ3, IRQ4, IRQ5, IRQ6, IRQ10, IRQ11, IRQ14, IRQ15	Manual assignment
PIRQH	Option for configuring PIRQ H	Auto	Automatic assignment by BIOS and the operating system
		IRQ3, IRQ4, IRQ5, IRQ6, IRQ10, IRQ11, IRQ14, IRQ15	Manual assignment
Reserve legacy interrupt 1	The interrupt reserved here is not made available to a PCI or PCI Express device.	None	No interrupt assigned
		IRQ3, IRQ4, IRQ5, IRQ6, IRQ10, IRQ11, IRQ14, IRQ15	Reserves IRQx
Reserve legacy interrupt 2	The interrupt reserved here is not made available to a PCI or PCI Express device.	None	No interrupt assigned
		IRQ3, IRQ4, IRQ5, IRQ6, IRQ10, IRQ11, IRQ14, IRQ15	Reserves IRQx

Table 169: Advanced - PCI configuration - PIRQ routing & IRQ reservation - Configuration options

1.4.4 PCI Express configuration

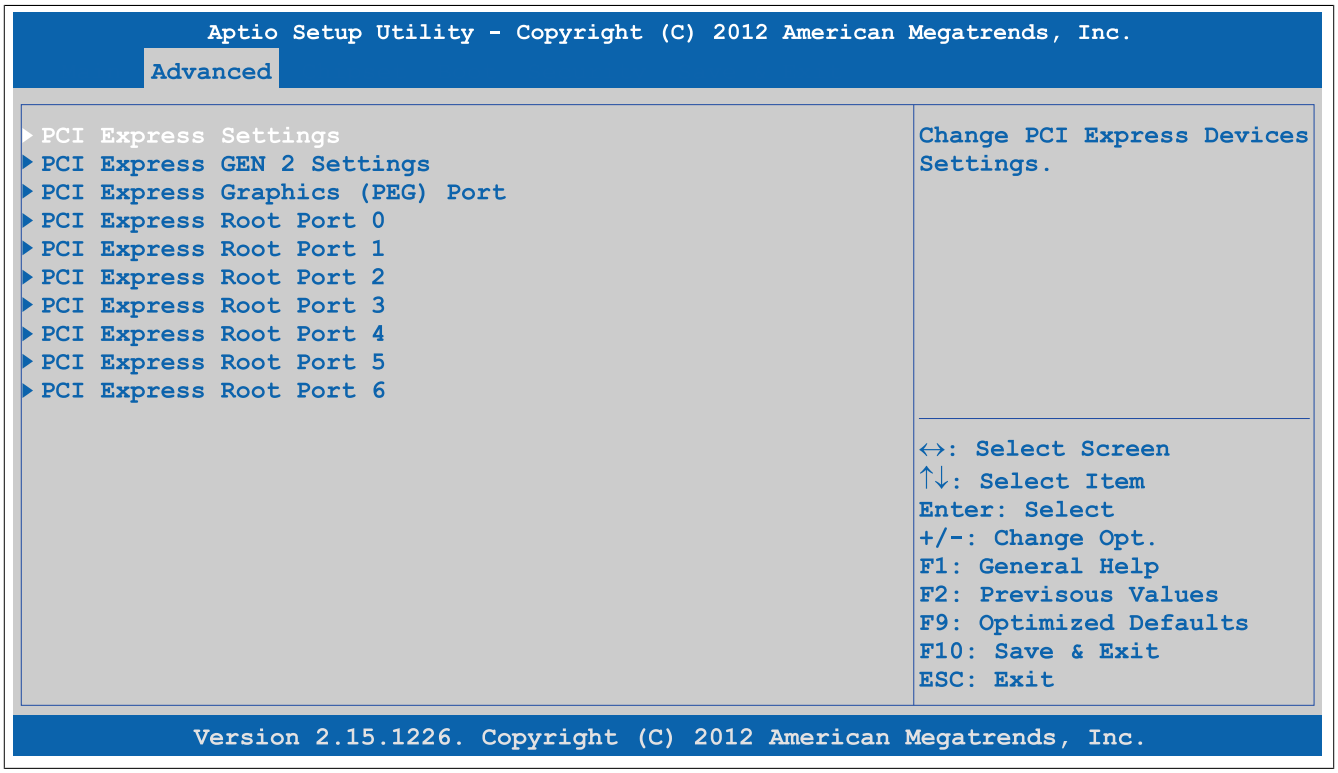

Figure 137: Advanced - PCI Express Configuration

BIOS setting	Function	Configuration options	Effect
PCI Express settings	Configures PCI Express settings	Enter	Opens the submenu See "PCI Express settings" on page 195
PCI Express GEN 2 settings	Configures PCI Express GEN2 settings	Enter	Opens the submenu See "PCI Express GEN 2 settings" on page 196
PCI Express graphics (PEG) port	Configures PCI Express graphics settings	Enter	Opens the submenu See "PCI Express graphics (PEG) port" on page 197
PCI Express root port 0	Configures PCI Express settings on port 0	Enter	Opens the submenu See "PCI Express root port" on page 199
PCI Express root port 1	Configures PCI Express settings on port 1	Enter	Opens the submenu See "PCI Express root port" on page 199
PCI Express root port 2	Configures PCI Express settings on port 2	Enter	Opens the submenu See "PCI Express root port" on page 199
PCI Express root port 3	Configures PCI Express settings on port 3	Enter	Opens the submenu See "PCI Express root port" on page 199
PCI Express root port 4	Configures PCI Express settings on port 4	Enter	Opens the submenu See "PCI Express root port" on page 199
PCI Express root port 5	Configures PCI Express settings on port 5	Enter	Opens the submenu See "PCI Express root port" on page 199
PCI Express root port 6	Configures PCI Express settings on port 6	Enter	Opens the submenu See "PCI Express root port" on page 199

Table 170: Advanced - PCI Express configuration - Menu

1.4.4.1 PCI Express settings

```
Aptio Setup Utility - Copyright (C) 2012 American Megatrends, Inc.
Advanced

PCI Express Device Settings                    Enables or Disables PCI
Relaxed Ordering                [Disabled]     Express Device Relaxed
Extended Tag                    [Disabled]     Ordering.
No Snoop                        [Enabled]
Maximum Payload                 [Auto]
Maximum Read Request            [Auto]

PCI Express Link Settings
ASPM                            [Disabled]
WARNING: Enabling ASPM may cause some
         PCI-E devices to fail
Extended Synch                  [Disabled]     ↔: Select Screen
Link Training Retry             [5]            ↑↓: Select Item
Link Training Timeout (uS)      100            Enter: Select
Unpopulated Links               [Keep Link On] +/-: Change Opt.
                                               F1: General Help
                                               F2: Previsous Values
                                               F9: Optimized Defaults
                                               F10: Save & Exit
                                               ESC: Exit

Version 2.15.1226. Copyright (C) 2012 American Megatrends, Inc.
```

Figure 138: Advanced - PCI Express Configuration - PCI Express Settings

BIOS setting	Function	Configuration options	Effect
Relaxed ordering	Option for enabling/disabling relaxed ordering	Disabled	Disables this function
		Enabled	Enables this function
Extended tag	Option for enabling/disabling the extended tag	Disabled	Disables this function Only 5 bits can be used.
		Enabled	Enables this function Devices with 8 bits in the requester transaction ID field can be used.
No snoop	Option for enabling/disabling the "No snoop" option	Disabled	Disables this function
		Enabled	Enables this function
Maximum payload	Option for setting the maximum surface packet size for data transfers	Auto	Automatically assigns the packet size
		128 bytes to 4096 bytes	Manual maps the packet size
Maximum read request	Option for setting the maximum read request	Auto	Automatic assignment
		128 bytes to 4096 bytes	Manual assignment
ASPM[1)]	Option for configuring a power saving function (L0s/L1) for PCIe slots if they do not require full power	Disabled	Disables the energy saving function
		Auto	Maximum energy savings. The energy saving function is set to L0 or L1.
		Force L0s	Enables L0 mode
Extended synch	Option for setting an extended synchronization pattern to improve system performance	Disabled	Disables this function
		Enabled	Enables this function
Link training retry	Option for defining the number of times the software should attempt to reroute a link if the previous training attempt was unsuccessful	Disabled	Disables this function
		2	2 link training attempts
		3	3 link training attempts
		5	5 link training attempts
Link training timeout (µS)	Option for defining how many microseconds the software waits before the link training bit in the link status register is queried	10 to 1000	Time setting in µs
Unpopulated links	Option for enabling/disabling PCIe slots where no devices are connected	Keep link on	Keeps PCIe slots where no devices are connected enabled
		Disable link	Disables PCIe slots where no devices are connected to save power

Table 171: Advanced - PCI Express configuration - PCI Express settings - Configuration options

1) ASPM = Active state power management.

1.4.4.2 PCI Express GEN 2 settings

```
Aptio Setup Utility - Copyright (C) 2012 American Megatrends, Inc.
Advanced

PCI Express GEN2 Device Register Settings
Completion Timeout                [Default]
ARI Forwarding                    [Disabled]
AtomicOp Requester Enable         [Disabled]
AtomicOp Egress Blocking          [Disabled]
IDO Request Enable                [Disabled]
IDO Completion Enable             [Disabled]
LTR Mechanism Enable              [Disabled]
End-End TLP Prefix Blocking       [Disabled]

PCI Express GEN2 Link Register Settings
Target Link Speed                 [Auto]
Clock Power Management            [Disabled]
Compliance SOS                    [Disabled]
Hardware Autonomous Width         [Enabled]
Hardware Autonomous Speed         [Enabled]

In device Functions that
support Completion Timeout
programmability, allows
systems software to modify
the Completion Timeout
value. `Default` 50us to
50ms. If `Shorter` is
selected, software will
use shorter timout ranges
supported by hardware.

↔: Select Screen
↑↓: Select Item
Enter: Select
+/-: Change Opt.
F1: General Help
F2: Previsous Values
F9: Optimized Defaults
F10: Save & Exit
ESC: Exit

Version 2.15.1226. Copyright (C) 2012 American Megatrends, Inc.
```

Figure 139: Advanced - PCI Express Configuration - PCI Express GEN 2 Settings

BIOS setting	Function	Configuration options	Effect
Completion timeout	Option for allowing software to modify the completion timeout value if supported by device functions	Default	Timeout range: 50 µs - 50 ms
		Shorter	The software uses shorter timeout ranges than are supported by the hardware.
		Longer	The software uses longer timeout ranges than are supported by the hardware.
		Disabled	Disables this function
ARI forwarding	If supported by hardware and set to "Enabled", the downstream port disables its traditional "Device number" field being 0 enforcement when turning a Type1 configuration request into a Type0 configuration request, permitting access to extended functions in an ARI device immediately below the port.	Disabled	Disables this function
		Enabled	Enables this function
AtomicOp requester enable	Option for enabling/disabling the AtomicOp requester	Disabled	Disables this function
		Enabled	Enables this function AtomicOp queries are only initiated if the bus master enable bit is set in the command register.
AtomicOp egress blocking	Option for enabling/disabling AtomicOp egress blocking If supported by hardware and set to "Enabled", outbound AtomicOp requests via egress ports will be locked.	Disabled	Disables this function
		Enabled	Enables this function Blocks outbound AtomicOp requests via the egress port
IDO request enable	If supported by hardware and set to "Enabled", this option permits setting the number of ID-based ordering (IDO) bit (Attribute[2]) requests to be initiated.	Disabled	Disables this function
		Enabled	Enables this function
IDO completion enable	If supported by hardware and set to "Enabled", this option permits setting the number of ID-based ordering (IDO) bit (Attribute[2]) requests to be initiated.	Disabled	Disables this function
		Enabled	Enables this function
LTR mechanism enable	If supported by hardware and set to "Enabled", this enables the Latency Tolerance Reporting (LTR) mechanism.	Disabled	Disables this function
		Enabled	Enables this function
End-End TLP prefix blocking	If supported by hardware and set to "Enabled", this function will block forwarding of TLPs containing End-End TLP prefixes.	Disabled	Disables this function
		Enabled	Enables this function
Target link speed	If supported by hardware and set to "Force to 2.5 GT/s" for downstream ports, this sets an upper limit on Link operational speed by redistricting the values advertised by the upstream component in its training sequences. When "Auto" is selected, hardware-initialized data will be used.	Auto	TBD
		Force to 2.5 GT/s	TBD
		Force to 5.0 GT/s	TBD

Table 172: Advanced - PCI Express configuration - PCI Express GEN 2 settings - Configuration options

BIOS setting	Function	Configuration options	Effect
Clock power management	If supported by hardware and set to "Enabled", the device is permitted to use the CLKREQ# signal for power management of the Link clock in accordance with the protocol defined in the appropriate form factor specification.	Disabled	Disables this function
		Enabled	Enables this function
Compliance SOS	If supported by hardware and set to "Enabled", this will force LTSSM to send SKP ordered sets between sequences when sending compliance patterns or modified compliance patterns.	Disabled	Disables this function
		Enabled	Enables this function
Hardware autonomous width	If supported by hardware and set to "Disabled", this will disable the hardware's ability to change link width except width size reduction for the purpose of correcting unstable link operation.	Disabled	Disables this function
		Enabled	Enables this function
Hardware autonomous speed	If supported by hardware and set to "Disabled", this will disable the hardware's ability to change link speed except speed size reduction for the purpose of correcting unstable link operation.	Disabled	Disables this function The PCIe device can no longer change the link speed except to correct unstable operation.
		Enabled	Enables this function

Table 172: Advanced - PCI Express configuration - PCI Express GEN 2 settings - Configuration options

1.4.4.3 PCI Express graphics (PEG) port

```
Aptio Setup Utility - Copyright (C) 2012 American Megatrends, Inc.
Advanced

PCI Express Graphics (PEG) Port    [Auto]
PEG Root Port Configuration        [1 x8 + 2 x4]
PEG0                               Not Present
  PEG0 Speed                       [Auto]
  PEG0 ASPM                        [Disabled]
PEG1                               Not Present
  PEG1 Speed                       [Gen1]
  PEG1 ASPM                        [Disabled]
PEG2                               Not Present
  PEG2 Speed                       [Auto]
  PEG2 ASPM                        [Disabled]

Detected Non-compliant Device      [Disabled]
De-emphasis Control                [-3.5 dB]

Disabled=Disabled internal
PEG interface devices and
do not detect the devices
connected to the PEG port.
Enabled=Enable internal
PEG interface devices also
if no device is detected
on PEG port.
Auto=Disable internal PEG
interface devices

↔: Select Screen
↑↓: Select Item
Enter: Select
+/-: Change Opt.
F1: General Help
F2: Previsous Values
F9: Optimized Defaults
F10: Save & Exit
ESC: Exit

Version 2.15.1226. Copyright (C) 2012 American Megatrends, Inc.
```

Figure 140: Advanced - PCI Express Configuration - PCI Express Graphics (PEG) Port

BIOS setting	Function	Configuration options	Effect
PCI Express graphics (PEG) port	Option for configuring the PCI Express graphics port	Disabled	Disables internal PEG interface devices. Devices connected to the PEG port are not detected.
		Enabled	Enables internal PEG interface devices even if no device is detected on the PEG port
		Auto	Disables internal PEG interface devices if no device is detected on the PEG port
PEG root port configuration	Option for selecting the root port configuration on the 16 PCIe channels of the PEG port	1 x 16	Configuration with 1 x 16
		2 x 8	Configuration with 2 x 8
		1 x 8 + 2 x 4	Configuration with 1 x 8 and 2 x 4
PEG0	Displays the mode in which the device connected to the PEG0 port is being operated	None	-
PEG0 speed	Option for setting the maximum transfer rate of the PEG0 port	Auto	Selects the maximum transfer rate
		Gen1	Maximum transfer rate = 2.5 GT/s
		Gen2	Maximum transfer rate = 5 GT/s
		Gen3	Maximum transfer rate = 8 GT/s
PEG0 ASPM[1)]	Option for configuring a power saving function for the PEG0 port if it does not require full power	Disabled	Disables this function
		Auto	Automatic assignment by BIOS and the operating system
		ASPM L0s	Enables the L0 energy saving function

Table 173: Advanced - PCI Express configuration - PCI Express graphics (PEG) port - Configuration options

BIOS setting	Function	Configuration options	Effect
		ASPM L1	Enables the L1 energy saving function. Power consumption is lower than with L0, but the exit latency is higher.
		ASPM L0sL1	Automatic assignment of L0s or L1 power saving function by the PCIe device
ASPM L0s[2)]	Option for configuring the L0 power saving function	Disabled	Disables this function
		Root port only	Enables the power saving function for the root port
		Endpoint only	Enables the power saving function for the endpoint port
		Both root and endpoint ports	Enables the power saving function for the root and endpoint ports
PEG1	Displays the mode in which the device connected to the PEG1 port is being operated.	None	-
PEG1 speed	Option for setting the maximum transfer rate for the PEG1 port	Auto	Selects the maximum transfer rate
		Gen1	Maximum transfer rate = 2.5 GT/s
		Gen2	Maximum transfer rate = 5 GT/s
		Gen3	Maximum transfer rate = 8 GT/s
PEG1 ASPM[1)]	Option for configuring a power saving function for the PEG1 port if it does not require full power	Disabled	Disables this function
		Auto	Automatic assignment by BIOS and the operating system
		ASPM L0s	Enables the L0 energy saving function
		ASPM L1	Enables the L1 energy saving function. Power consumption is lower than with L0, but the exit latency is higher.
		ASPM L0sL1	Automatic assignment of L0s or L1 power saving function by the PCIe device
ASPM L0s[3)]	Option for configuring the L0 power saving function	Disabled	Disables this function
		Root port only	Enables the power saving function for the root port
		Endpoint only	Enables the power saving function for the endpoint port
		Both root and endpoint ports	Enables the power saving function for the root and endpoint ports
PEG2	Displays the mode in which the device connected to the PEG2 port is operated.	None	-
PEG2 speed	Option for setting the maximum transfer rate for the PEG2 port	Auto	Selects the maximum transfer rate
		Gen1	Maximum transfer rate = 2.5 GT/s
		Gen2	Maximum transfer rate = 5 GT/s
		Gen3	Maximum transfer rate = 8 GT/s
PEG2 ASPM[1)]	Option for configuring a power saving function for the PEG2 port if it does not require full power	Disabled	Disables this function
		Auto	Automatic assignment by BIOS and the operating system
		ASPM L0s	Enables the L0 energy saving function
		ASPM L1	Enables the L1 energy saving function. Power consumption is lower than with L0, but the exit latency is higher.
		ASPM L0sL1	Automatic assignment of L0s or L1 power saving function by the PCIe device
ASPM L0s[4)]	Option for configuring the L0 power saving function	Disabled	Disables this function
		Root port only	Enables the power saving function for the root port
		Endpoint only	Enables the power saving function for the endpoint port
		Both root and endpoint ports	Enables the power saving function for the root and endpoint ports
Detect non-compliant device	Option for detecting incompatible PCI Express devices on the PEG port	Disabled	Disables this function
		Enabled	Enables this function Even incompatible PCI Express devices are detected on the PEG port.
De-emphasis control	Option for configuring de-emphasis on the PEG port	-6 dB	-6 dB de-emphasis
		-3.5 dB	-3.5 dB de-emphasis

Table 173: Advanced - PCI Express configuration - PCI Express graphics (PEG) port - Configuration options

1) ASPM = Active state power management.
2) This setting is only possible if *PEG0 ASPM* is set to *ASPM L0s* or *ASPM L0sL1*.
3) This setting is only possible if *PEG1 ASPM* is set to *ASPM L0s* or *ASPM L0sL1*.
4) This setting is only possible if *PEG2 ASPM* is set to *ASPM L0s* or *ASPM L0sL1*.

1.4.4.4 PCI Express root port

Warning!

Improper settings can cause instability or device problems. It is therefore strongly recommended that these settings only be changed by experienced users.

```
Aptio Setup Utility - Copyright (C) 2012 American Megatrends, Inc.
Advanced

PCI Express Root Port 0          [Enabled]        Control the PCI Express
ASPM                             [Auto]           port.
  URR                            [Disabled]
  FER                            [Disabled]
  NFER                           [Disabled]
  CER                            [Disabled]
  CTO                            [Disabled]
  SEFE                           [Disabled]
  SENFE                          [Disabled]
  SECE                           [Disabled]
  PME SCI                        [Enabled]
  Always Enbale Port             [Disabled]       ↔: Select Screen
  PCIe Speed                     [Auto]           ↑↓: Select Item
Assign INT to Root Port          [Enabled]        Enter: Select
Extra Bus Reserved               0                +/-: Change Opt.
Reserved Memory                  10               F1: General Help
Prefetchable Memory              10               F2: Previsous Values
Reserved I/O                     4                F9: Optimized Defaults
                                                  F10: Save & Exit
                                                  ESC: Exit

Version 2.15.1226. Copyright (C) 2012 American Megatrends, Inc.
```

Figure 141: Advanced - PCI Express Configuration - PCI Express Root Port

BIOS setting	Function	Configuration options	Effect
PCI Express root port x	Option for enabling/disabling the PCI Express root port	Enabled	Enables PCI Express root port 1
		Disabled	Disables PCI Express root port 1 and 2
ASPM	*Active state power management* Option for configuring a power saving function (L0s/L1) for PCIe devices if they do not require full power	Disabled	Disables this function
		L0s	Enables the L0 energy saving function
		L1	Enables the L1 energy saving function. Power consumption is lower than with L0, but the exit latency is higher.
		L0sL1	Automatic assignment of L0s or L1 power saving function by the PCIe device
		Auto	Automatic assignment by BIOS and the operating system
URR	*Unsupported Request (UR) reporting* Option for reporting unsupported requests. Logging of error messages received by the root port is controlled exclusively by the root control register.	Enabled	Enables this function
		Disabled	Disables this function
FER	*Fatal error reporting* Option for reporting fatal errors. All of the functions of a multifunction device will be monitored. The report for the root port takes place internally inside the root complex.	Enabled	Enables this function
		Disabled	Disables this function
NFER	*Non-fatal error reporting* Option for reporting non-fatal errors. All of the functions of a multifunction device will be monitored. The report for the root port takes place internally inside the root complex.	Enabled	Enables this function
		Disabled	Disables this function
CER	*Correctable error reporting* Option for reporting non-fatal errors. All of the functions of a multifunction device will be monitored. The report for the root port takes place internally inside the root complex.	Enabled	Enables this function
		Disabled	Disables this function
CT0	*PCI Express completion timer T0*	Enabled	Enables this function

Table 174: Advanced - PCI Express configuration - PCI Express root port - Configuration options

BIOS setting	Function	Configuration options	Effect
	Option for enabling/disabling the PCI Express completion timer **Information:** **This setting should be set to "Enabled" if the system detected an ROB (processor reorder buffer) timeout.**	Disabled	Disables this function
SEFE	*System error on fatal error* Option for generating a system error if a fatal error is registered by a device on the root port or by the root port itself	Enabled	Enables this function
		Disabled	Disables this function
SENFE	*System error on non-fatal error* Option for generating a system error if a non-fatal error is registered by a device on the root port or by the root port itself	Enabled	Enables this function
		Disabled	Disables this function
SECE	*System error on correctable error* Option for generating a system error if a correctable error is registered by a device on the root port or by the root port itself	Enabled	Enables this function
		Disabled	Disables this function
PME SCI	Option for generating an SCI if power management is detected	Enabled	Enables this function Enables the root port to generate an SCI if power management is detected
		Disabled	Disables this function
Always enable port	Option for keeping the port enabled constantly	Enabled	Enables this function
		Disabled	Disables this function
PCIe speed	Option for setting the PCI Express transfer rate	Auto	Automatically sets the transfer rate
		Gen1	Maximum transfer rate = 2.5 GT/s
		Gen2	Maximum transfer rate = 5 GT/s
Assign INT to root port	Option for enabling/disabling the IRQ for the root port	Disabled	Disables this function
		Enabled	Enables this function
Extra bus reserved	Option for reserving the extra bus to bridges behind this root bridge	0 to 7	
Reserved memory	Option for configuring reserved memory for this root bridge	0 to 20	
Prefetchable memory	Option for configuring prefetchable memory for this root bridge	1 to 20	
Reserved I/O	Option for configuring a reserved I/O range (4K/8K/12K/16K/20K) for this root bridge	4 to 20	

Table 174: Advanced - PCI Express configuration - PCI Express root port - Configuration options

1.4.5 ACPI settings

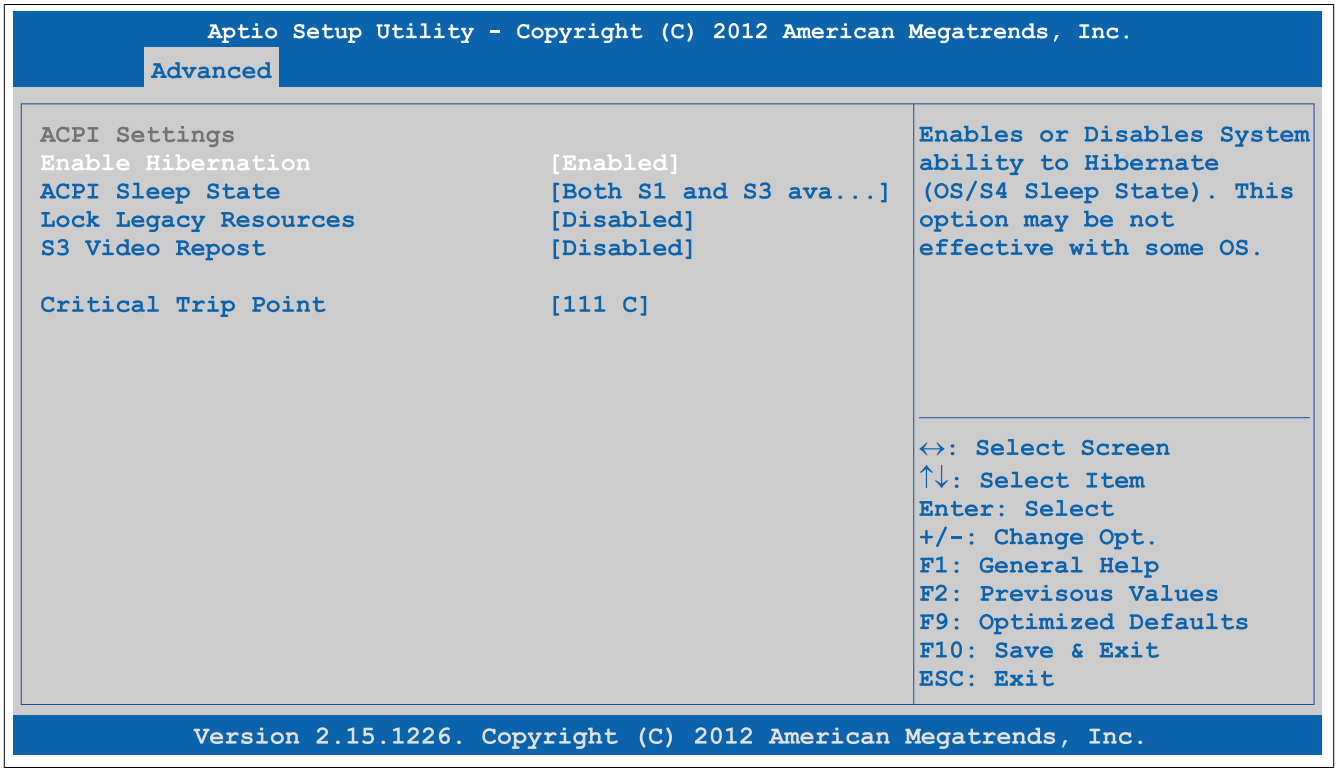

Figure 142: Advanced - ACPI Settings

BIOS setting	Function	Configuration options	Effect
Enable hibernation	Option for enabling/disabling the hibernate function. This can put the operating system into the S4 state. This option may not have any effect on some operating systems.	Disabled	Disables this function
		Enabled	Enables this function
ACPI sleep state	Selects the ACPI status to be used when Suspend mode is enabled	Suspend disabled	Disables this function
		S1 only (CPU stop clock)	Sets S1 as Suspend mode. Only a few functions are disabled and are available again at the touch of a button.
		S3 only (Suspend to RAM)	Sets S3 as Suspend mode. The current state of the operating system is written to RAM, which is then the only component to receive power.
		Both S1 and S3 available for OS to choose from	Enables S1 and S3. The states can then be selected by the operating system.
Lock legacy resources	Option for configuring whether the operating system is permitted to configure legacy resources	Disabled	Disables this function
		Enabled	Enables this function
S3 video repost	Option for configuring whether the graphic ROM should be reposted after starting in the S3 status	Disabled	Disables this function
		Enabled	Enables this function
Critical trip point	Option for configuring a CPU temperature at which the operating system throttles the system	POR	Sets the critical trip point to 105°C
		87 C, 95 C, 103 C, 111 C, 119 C, 127 C	Temperature setting for the critical trip point. Configurable in increments of 5°C.

Table 175: Advanced - ACPI settings - Configuration options

1.4.6 RTC wake settings

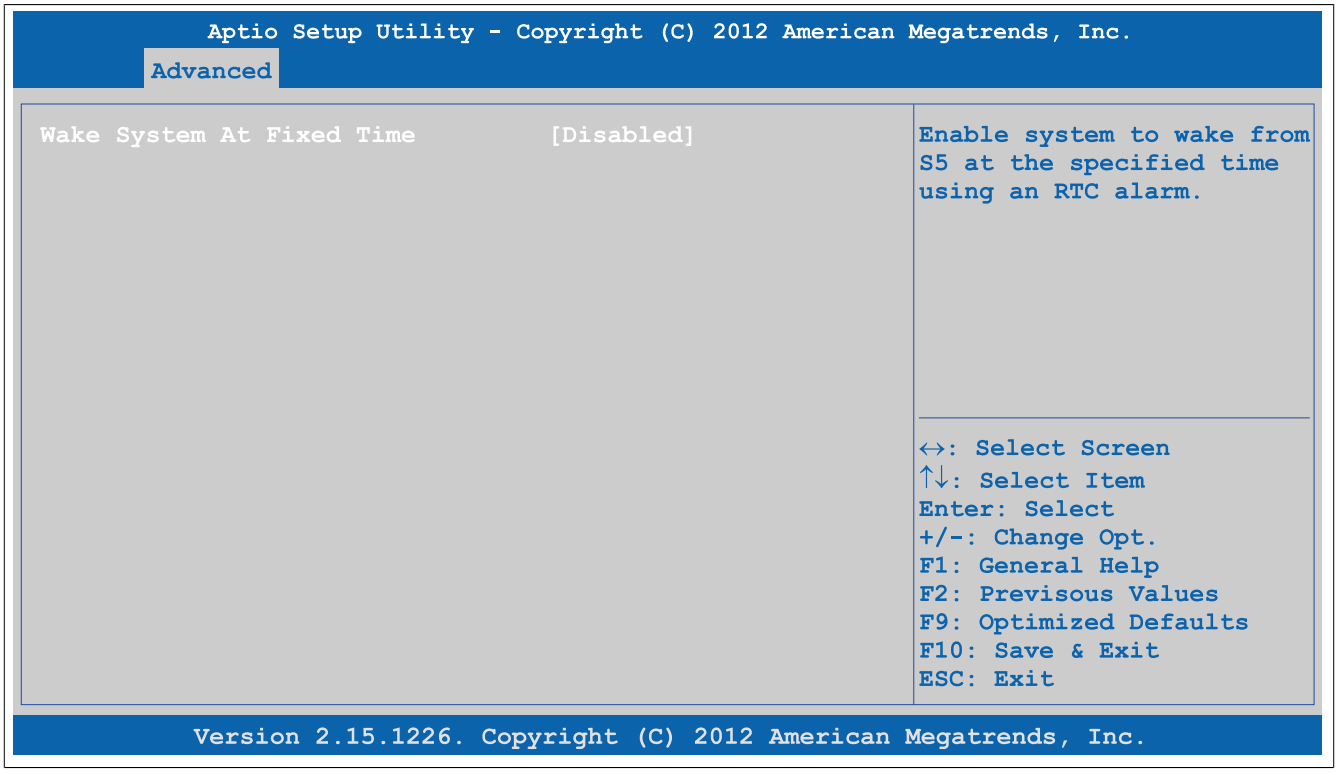

Figure 143: Advanced - RTC Wake Settings

BIOS setting	Function	Configuration options	Effect
Wake system at fixed time	Option for setting the time (to the second) when the system should boot from a switched-off state (ACPI S5)	Disabled	Disables this function
		Enabled	Enables this function
Wake up hour	Option for setting the hour	0 to 23	Example: If set to 3, the system will start up at 3 AM. If set to 15, the system will start up at 3 PM.
Wake up minute	Option for setting the minute	0 to 59	Example: If set to 15, the system will start up at minute 15.
Wake up second	Option for setting the second	0 to 59	Example: If set to 32, the system will start up at second 32.

Table 176: Advanced - RTC wake settings - Configuration options

1.4.7 CPU configuration

Information:

The settings shown may vary depending on the CPU board being used.

```
Aptio Setup Utility - Copyright (C) 2012 American Megatrends, Inc.
Advanced

▸ CPU Information                                    CPU Information

  Hyper-threading                    [Enabled]
  Active Processor Cores             [All]
  Limit CPUID Maximum                [Disabled]
  Execute Disable Bit                [Enabled]
  Intel Virtualization Technology    [Disabled]
  Hardware Prefetcher                [Enabled]
  Adjacent Cache Line Prefetch       [Enabled]
  TCC Activation Offset              0
  Primary Plane Current value        0
  Secondary Plane Current value      0

  EIST                               [Enabled]          ↔: Select Screen
  Turbo Mode                         [Enabled]          ↑↓: Select Item
  CPU C3 Report                      [Disabled]         Enter: Select
  CPU C6 Report                      [Disabled]         +/-: Change Opt.
  CPU C7 Report                      [Disabled]         F1: General Help
  Configurable TDP                   [TD NOMINAL]       F2: Previsous Values
  Config TDP LOCK                    [Disabled]         F9: Optimized Defaults
  Long duration power limit          0                  F10: Save & Exit
  Long duration maintained           1                  ESC: Exit
  Short duration power limi          0
  ACPI T State                       [Disabled]

Version 2.15.1226. Copyright (C) 2012 American Megatrends, Inc.
```

Figure 144: Advanced - CPU Configuration

BIOS setting	Function	Configuration options	Effect
CPU information	Displays CPU properties	Enter	Opens the submenu See "CPU information" on page 204
Hyper-threading	Option for enabling/disabling Intel hyper-threading technology	Disabled	Disables this function
		Enabled	Enables this function Each processor core can execute multiple tasks (threads) at the same time. Intel hyper-threading technology increases processor throughput and improves the overall performance of multi-thread software.
Active processor cores	Option for configuring which processor cores are to be used	All	Uses all processor cores
		1	Only uses one processor core
Limit CPUID maximum	Option for limiting the CPUID value. This may be necessary for older operating systems. **Information:** **This option must be set to *Disabled* when using Windows XP.**	Disabled	The processor returns the current maximum value when the CPUID value is requested.
		Enabled	The processor limits the maximum CPUID value to 03h if necessary if the processor supports a higher value.
Execute disable bit	Option for enabling/disabling hardware support for prevention of data execution	Disabled	Disables this function
		Enabled	Enables this function
Intel virtualization technology	Option for enabling/disabling a virtual machine **Information:** **A restart is required in order to apply changes made to this setting.**	Disabled	Disables this function
		Enabled	Allows a virtual machine to use the additional hardware capacity
Hardware prefetcher	Option for enabling/disabling the hardware prefetcher	Disabled	Disables this function
		Enabled	Enables this function. Data is temporarily stored in cache memory to increase performance.

Table 177: Advanced - CPU configuration - Configuration options

BIOS setting	Function	Configuration options	Effect
Adjacent cache line prefetch	Option for enabling/disabling the adjacent cache line prefetcher	Disabled	Disables this function
		Enabled	Enables this function. Loads the current and next line to cache in order to accelerate the read process
TCC[1] activation offset	Option for configuring the offset of the thermal control circuit (TCC) at temperatures below the TCC activation temperature	0 to 50	Sets the offset value
Primary plane current value	Option for configuring the maximum current on the primary plane at any single time	0 to 255	Setting from 0 to 255
Secondary plane current value	Option for configuring the maximum current on the secondary plane at any single time	0 to 255	Setting from 0 to 255
EIST	Option for enabling/disabling Intel® SpeedStep™ technology	Disabled	Disables Intel® SpeedStep™ technology
		Enabled	Enables Intel® SpeedStep™ technology
Turbo mode	Option for enabling/disabling Intel® Turbo Boost technology	Disabled	Disables Intel® Turbo Boost technology
		Enabled	Enables Intel® Turbo Boost technology
CPU C3 report	Option for enabling/disabling the CPU C3 (ACPI C2) report to the operating system	Disabled	Disables this function. No report is sent to the operating system.
		Enabled	Enables this function
CPU C6 report	Option for enabling/disabling the CPU C6 (ACPI C3) report to the operating system	Disabled	Disables this function. No report is sent to the operating system.
		Enabled	Enables this function
CPU C7 report	Option for enabling/disabling the CPU C7 (ACPI C3) report to the operating system	Disabled	Disables this function. No report is sent to the operating system.
		Enabled	Enables this function
Configurable TDP[2]	Option for configuring the TDP level	TDP NOMINAL	Value remains at the TDP level
		TDP DOWN	Value falls below the TDP level, with the CPU running at lower power
		TDP UP	Value rises above the TDP level, with the CPU running at higher power
		Disabled	Disables this function
Config TDP LOCK	Option for locking and configuring the TDP control register		Disables this function
		Enabled	Enables this function
Long duration power limit	Long duration power limit in watts	0 to 255	Setting from 0 to 255
Long duration maintained	Time period during which the "Long duration power" option is enabled	0 to 120	Setting from 0 to 120
Short duration power limit	Short duration power limit in watts	0 to 255	Setting from 0 to 255
ACPI T state	Option for enabling/disabling ACPI T state support.	Disabled	Disables this function
		Enabled	Enables this function

Table 177: Advanced - CPU configuration - Configuration options

1) TCC = Thermal control circuit
2) TDP = Thermal design power

1.4.7.1 CPU information

Information:

The settings shown may vary depending on the CPU board being used.

```
Aptio Setup Utility - Copyright (C) 2012 American Megatrends, Inc.
Advanced

Intel(R) Core(TM) i7-3517UE CPU @ 1.70GHz
CPU Signature                    306a8
Microcode Patch                  10
Max CPU Speed                    1700 MHz
Min CPU Speed                    800 MHz
CPU Speed                        1600 MHz
Processor Cores                  2
Intel HT Technology              Supported
Intel VT-x Technology            Supported
Intel SMX Technology             Supported
64-bit                           Supported

L1 Data Cache                    32 kB x 2
L1 Code Cache                    32 kB x 2
L2 Cache                         256 kB x 2
L3 Cache                         3072 kB

↔: Select Screen
↑↓: Select Item
Enter: Select
+/-: Change Opt.
F1: General Help
F2: Previsous Values
F9: Optimized Defaults
F10: Save & Exit
ESC: Exit

Version 2.15.1226. Copyright (C) 2012 American Megatrends, Inc.
```

Figure 145: Advanced - CPU Configuration - CPU Information

BIOS setting	Function	Configuration options	Effect
CPU signature	Displays the CPU ID	None	-
Microcode patch	Displays the microcode patch ID	None	-
Max CPU speed	Displays the maximum processor frequency	None	-
Min CPU speed	Displays the minimum processor frequency	None	-
CPU speed	Displays the processor frequency	None	-
Processor cores	Displays the number of processor cores	None	-
Intel HT technology	Displays whether the processor supports HT technology	None	-
Intel VT-x technology	Displays whether the processor supports VT-x technology	None	-
Intel SMX technology	Displays whether the processor supports SMX technology	None	-
64-bit	Displays whether the processor supports Intel 64-bit architectures	None	-
L1 data cache	Displays the size of the L1 data cache	None	-
L1 code cache	Displays the size of the L1 code cache	None	-
L2 cache	Displays the size of the L2 cache	None	-
L3 cache	Displays the size of the L3 cache	None	-

Table 178: Advanced - CPU configuration - CPU information - Configuration options

1.4.8 Chipset configuration

```
Aptio Setup Utility - Copyright (C) 2012 American Megatrends, Inc.
Advanced

PCH LAN Controller                [Auto]
  Wake on LAN                     [Enabled]

Azalia                            [Auto]
  Azalia PME                      [Disabled]
  Azalia Internal HDMI Codec      [Disabled]

High Prescision Timer             [Enabled]
CF9h Global Reset                 [Host only]
PCI Express Clock Gating          [Disabled]
DMI Link ASPM PCH Side            [Disabled]
PCIe-USB Glitch W/A               [Disabled]

SB CRID                           [Disabled]
NB CRID                           [Disabled]

DMI Configuration
DMI                               X4 Gen2
DMI Vc1 Control                   [Enabled]
DMI Vcp Control                   [Enabled]
DMI Vcm Control                   [Enabled]
DMI Link ASPM CPU Side            [Disabled]
DMI Extended Synch Control        [Disabled]
DMI Gen 2                         [Auto]

Enable or disable onboard
NIC.

↔: Select Screen
↑↓: Select Item
Enter: Select
+/-: Change Opt.
F1: General Help
F2: Previsous Values
F9: Optimized Defaults
F10: Save & Exit
ESC: Exit

Version 2.15.1226. Copyright (C) 2012 American Megatrends, Inc.
```

Figure 146: Advanced - Chipset Configuration

BIOS setting	Function	Configuration options	Effect
PCH LAN controller	Option for turning the onboard LAN controller (ETH1) on and off	Disabled	Disables the controller
		Enabled	Enables the controller
Wake on LAN	Option for switching on the system via the on-board LAN controller (ETH1)	Enabled	Enables this function. The LAN controller can switch on the system.
		Disabled	Disables this function. The LAN controller cannot switch on the system.
Azalia	Option for enabling/disabling the audio controller	Disabled	Disables the audio controller
		Enabled	Enables the audio controller
		Auto	Only enables the audio controller if a device is connected
Azalia PME	Option for enabling/disabling power management for the audio controller	Disabled	Disables this function
		Enabled	Enables this function
Azalia internal HDMI codec	Option for enabling/disabling the internal HDMI codec for Azalia	Disabled	Disables audio output
		Enabled	Enables audio output
High-precision timer	The HPET is a timer inside the PC. It is able to trigger an interrupt with a high degree of accuracy, which allows other programs to better synchronize a variety of applications.	Disabled	Disables this function
		Enabled	Enables this function. This function is recommended for multimedia applications.
CF9h global reset	Option for setting the restart on the CF9h reset register	Host only	Chipset only
		Host+ME	Chipset and management engine
PCI Express clock gating	Option for enabling/disabling PCI Express clock gating for each individual root port	Disabled	Disables this function
		Enabled	Enables this function
DMI link ASPM PCH side	Option for enabling/disabling active state power management (ASPM) for the DMI link on the PCH side	Disabled	Disables this function
		Enabled	Enables this function
PCIe USB glitch W/A	Option for enabling/disabling the PCIe USB glitch if a malfunctioning USB device is connected after the PCIe/PEG port	Disabled	Disables this function
		Enabled	Enables this function
SB CRID	Option for enabling/disabling the southbridge compatible revision ID	Disabled	Disables this function
		Enabled	Enables this function
NB CRID	Option for enabling/disabling the northbridge compatible revision ID	Disabled	Disables this function
		Enabled	Enables this function
DMI configuration			
DMI	Displays the DMI version / generation	None	-
DMI Vc1 control	Option for enabling/disabling DMI Vc1	Enabled	Enables this function
		Disabled	Disables this function

Table 179: Advanced - Chipset configuration - Configuration options

BIOS setting	Function	Configuration options	Effect
DMI Vcp control	Option for enabling/disabling DMI Vcp	Enabled	Enables this function
		Disabled	Disables this function
DMI Vcm control	Option for enabling/disabling DMI Vcm.	Enabled	Enables this function
		Disabled	Disables this function
DMI link ASPM CPU side	Option for enabling/disabling active state power management (ASPM) for the DMI link on the CPU side	Disabled	Disables this function
		L0s	Enables the L0 energy saving function
		L1	Enables the L1 energy saving function. Power consumption is lower than with L0, but the exit latency is higher.
		L0sL1	Automatic assignment of L0s or L1 power saving function by the PCIe device
DMI extended synch control	Option for enabling/disabling DMI extended synchronization	Enabled	Enables this function
		Disabled	Disables this function
DMI Gen 2	Option for enabling/disabling DMI Gen 2	Auto	Disabled for IVB A0 MB/DT and IVB B0 MB, enabled for other CPUs
		Enabled	Enables this function
		Disabled	Disables this function

Table 179: Advanced - Chipset configuration - Configuration options

1.4.9 SATA configuration

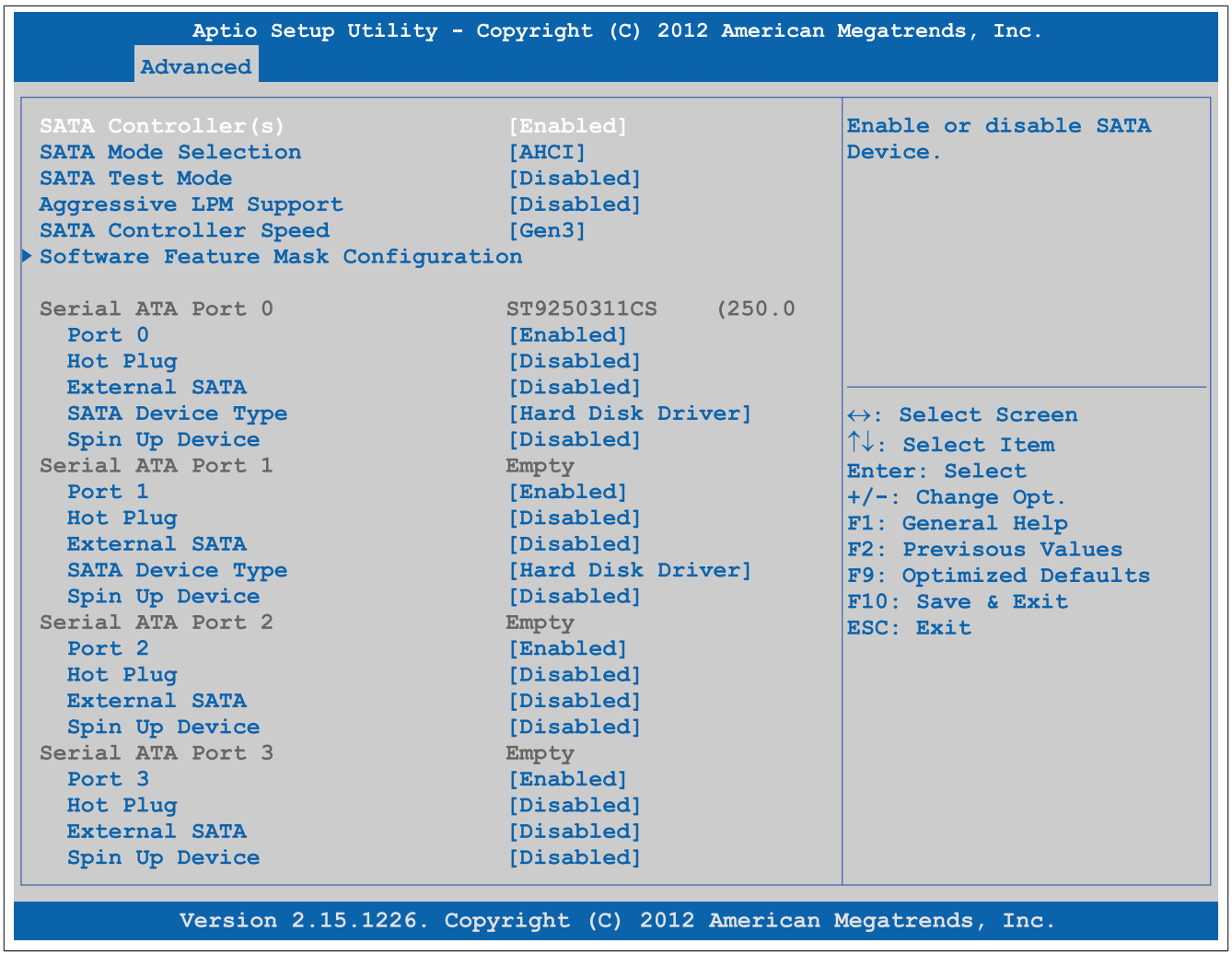

Figure 147: Advanced - SATA configuration

BIOS setting	Function	Configuration options	Effect
SATA controller(s)	Option for configuring SATA support	Enabled	Provides support for SATA devices
		Disabled	No support for SATA devices
SATA mode selection	Option for configuring supported serial ATA connections	IDE	Uses the serial ATA hard drive as a parallel ATA physical drive It is not possible to configure the SATA port.
		AHCI	The AHCI setting enables the internal memory driver for SATA functions, which increases the storage performance for random read-write access by allowing the drive itself to determine the sequence of commands.

Table 180: Advanced - SATA configuration - Configuration options

BIOS setting	Function	Configuration options	Effect
		RAID	RAID 0, 1, 5, 10 or Intel® Matrix Storage technology can be configured here with the serial ATA hard drive.
SATA test mode	Option for configuring the test function. This is only used for test measurements.	Enabled	Enables this function
		Disabled	Disables this function
Aggressive LPM support	Aggressive Link Power Management (ALPM) is a power saving method for SATA drives.	Enabled	Enables this function
		Disabled	Disables this function
SATA controller speed	Option for setting the maximum SATA transfer rate The transfer rate is also dependent on the maximum possible transfer rate of the drive.	Gen1	Maximum SATA transfer rate = 1.5 Gbit/s
		Gen2	Maximum SATA transfer rate = 3.0 Gbit/s
		Gen3	Maximum SATA transfer rate = 6.0 Gbit/s
Software feature mask configuration	Configuration of various drive settings	Enter	Opens the submenu See "Software feature mask configuration" on page 208
Alternate ID[1)]	Option for enabling/disabling a report of the alternate device ID	Enabled	Enables this function
		Disabled	Disables this function
Serial ATA port 0	Displays the device connected to SATA port 0	None	-
Port 0	Option for enabling/disabling SATA port 0	Disabled	Disables SATA port 0
		Enabled	Enables SATA port 0
Hot plug	Option for configuring hot plugging for SATA port 0	Disabled	Hot plugging not enabled for SATA port 0
		Enabled	Hot plugging enabled for SATA port 0. Devices can be connected/disconnected during operation.
External SATA	Option for configuring the external SATA port	Disabled	Uses the port externally as eSATA
		Enabled	Uses the port internally as SATA
Mechanical presence switch[2)]	Option for enabling/disabling the report if this port has a mechanical presence switch	Disabled	Disables this function
		Enabled	Enables this function
SATA device type	Identifies whether a solid state or hard disk drive is connected to the SATA port	Hard disk drive	A hard disk is connected to the SATA port.
		Solid-state drive	A solid-state drive is connected to the SATA port.
Spin up device	Option for configuring an initialization sequence for the connected device during startup for the SATA port	Disabled	Disables this function
		Enabled	Enables this function
Serial ATA port 1	Displays the device connected to SATA port 1	None	-
Port 1	Option for enabling/disabling SATA port 1	Disabled	Disables SATA port 1
		Enabled	Enables SATA port 1
Hot plug	Option for configuring hot plugging for SATA port 1	Disabled	Hot plugging not enabled for SATA port 1
		Enabled	Hot plugging enabled for SATA port 1. Devices can be connected/disconnected during operation.
External SATA	Option for configuring the external SATA port	Disabled	Uses the port externally as eSATA
		Enabled	Uses the port internally as SATA
Mechanical presence switch[2)]	Option for enabling/disabling the report if this port has a mechanical presence switch	Disabled	Disables this function
		Enabled	Enables this function
SATA device type	Identifies whether a solid state or hard disk drive is connected to the SATA port	Hard disk drive	A hard disk is connected to the SATA port.
		Solid-state drive	A solid-state drive is connected to the SATA port.
Spin up device	Option for configuring an initialization sequence for the connected device during startup for the SATA port	Disabled	Disables this function
		Enabled	Enables this function
Serial ATA port 2	Displays the device connected to SATA port 2	None	-
Port 2	Option for enabling/disabling SATA port 2	Disabled	Disables SATA port 2
		Enabled	Enables SATA port 2
Hot plug	Option for configuring hot plugging for SATA port 2	Disabled	Hot plugging not enabled for SATA port 2
		Enabled	Hot plugging enabled for SATA port 2. Devices can be connected/disconnected during operation.
External SATA	Option for configuring the external SATA port	Disabled	Uses the port externally as eSATA
		Enabled	Uses the port internally as SATA
Mechanical presence switch[2)]	Option for enabling/disabling the report if this port has a mechanical presence switch	Disabled	Disables this function
		Enabled	Enables this function
SATA device type	Identifies whether a solid state or hard disk drive is connected to the SATA port	Hard disk drive	A hard disk is connected to the SATA port.
		Solid-state drive	A solid-state drive is connected to the SATA port.
Spin up device	Option for configuring an initialization sequence for the connected device during startup for the SATA port	Disabled	Disables this function
		Enabled	Enables this function
Serial ATA port 3	Displays the device connected to SATA port 3	None	-
Port 3	Option for enabling/disabling SATA port 3	Disabled	Disables SATA port 3
		Enabled	Enables SATA port 3
Hot plug	Option for configuring hot plugging for SATA port 3	Disabled	Hot plugging not enabled for SATA port 3
		Enabled	Hot plugging enabled for SATA port 3. Devices can be connected/disconnected during operation.
External SATA	Option for configuring the external SATA port	Disabled	Uses the port externally as eSATA
		Enabled	Uses the port internally as SATA

Table 180: Advanced - SATA configuration - Configuration options

BIOS setting	Function	Configuration options	Effect
Mechanical presence switch[2)]	Option for enabling/disabling the report if this port has a mechanical presence switch	Disabled	Disables this function
		Enabled	Enables this function
SATA device type	Identifies whether a solid state or hard disk drive is connected to the SATA port	Hard disk drive	A hard disk is connected to the SATA port.
		Solid-state drive	A solid-state drive is connected to the SATA port.
Spin up device	Option for configuring an initialization sequence for the connected device during startup for the SATA port	Disabled	Disables this function
		Enabled	Enables this function

Table 180: Advanced - SATA configuration - Configuration options

1) This setting is only possible if *SATA mode selection* is set to *RAID*.
2) This setting is only possible if *Hot plug* is set to *Enabled*.

1.4.9.1 Software feature mask configuration

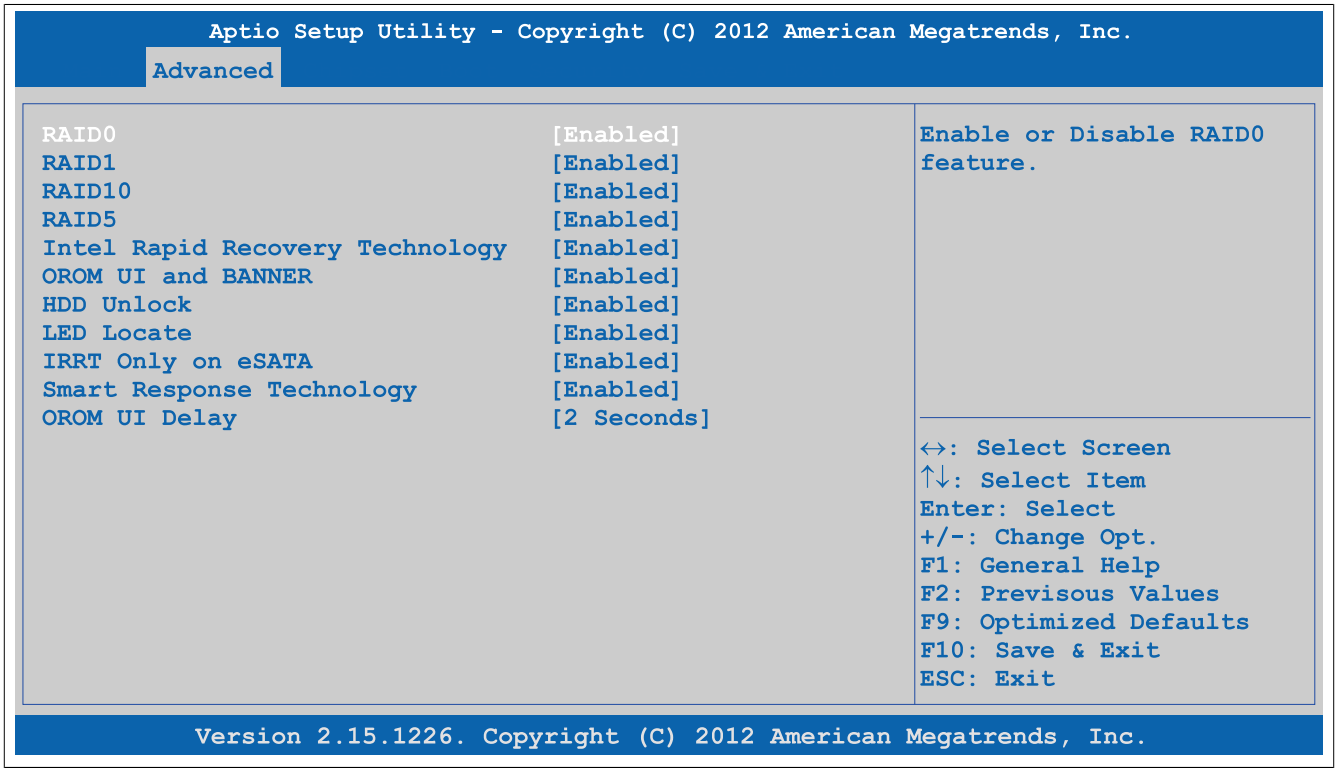

Figure 148: Advanced - SATA Configuration - Software Feature Mask Configuration

BIOS setting	Function	Configuration options	Effect
RAID0	Option for enabling/disabling a RAID0 system	Disabled	Disables this function
		Enabled	Enables this function
RAID1	Option for enabling/disabling a RAID1 system	Disabled	Disables this function
		Enabled	Enables this function
RAID10	Option for enabling/disabling a RAID10 system	Disabled	Disables this function
		Enabled	Enables this function
RAID5	Option for enabling/disabling a RAID5 system	Disabled	Disables this function
		Enabled	Enables this function
Intel Rapid Recovery technology	Option for enabling/disabling Intel® Rapid Recovery technology	Disabled	Disables this function
		Enabled	Enables this function
OROM UI and BANNER	Option for displaying the OROM UI	Disabled	Does not display the OROM UI or banner
		Enabled	Displays the OROM UI
HDD unlock	Option for enabling/disabling the HDD password unlock mechanism in the operating system	Disabled	Disables the HDD password unlock mechanism
		Enabled	Enables the HDD password unlock mechanism
LED locate	Option for displaying the LED/SGPIO when a drive is connected	Disabled	Disables this function
		Enabled	Enables an indicator for when a drive is connected
IRRT only on eSATA[1)]	Option for configuring Intel® Rapid Recovery technology	Disabled	Every RAID system can use internal and eSATA drives.
		Enabled	Only IRRT systems can use internal eSATA drives.

Table 181: Advanced - SATA configuration - Software feature mask configuration - Configuration options

BIOS setting	Function	Configuration options	Effect
Smart Response technology	Option for enabling/disabling Intel® Smart Response technology	Disabled	Disables this function
		Enabled	Enables this function
OROM UI delay	Option for displaying the delay time for the OROM UI splash screen	2 seconds, 4 seconds, 6 seconds, 8 seconds	Setting in seconds

Table 181: Advanced - SATA configuration - Software feature mask configuration - Configuration options

1) IRRT = Intel Rapid Recovery technology

1.4.10 Memory configuration

```
Aptio Setup Utility - Copyright (C) 2012 American Megatrends, Inc.
Advanced

▶Memory Information                                  Memory Information

 DIMM profile                          [Default DIMM profile]
 Memory Frequency Limiter              [Auto]
 No Fan Memory Frequency Limiter       [Enabled]
 ECC Support                           [Disabled]
 Max TOLUD                             [Dynamic]
 NMode Support                         [Auto]
 Memory Scrambler                      [Enabled]
 Memory Refresh Rate                   [Disabled]
 MRC Fast Boot                         [Enabled]
 Force Cold Reset                      [Enabled]
 DIMM Exit Mode                        [Fast Exit]
   Power Down Mode                     [PPD]
 Scrambler Seed Generation Off         [Disabled]
 Memory Remap                          [Enabled]
 Memory Alias Check                    [Disabled]
 Channel A DIMM Control                [Enable Both DIMMS]
 Channel B DIMM Control                [Enable Both DIMMS]

                                       ↔: Select Screen
                                       ↑↓: Select Item
                                       Enter: Select
                                       +/-: Change Opt.
                                       F1: General Help
                                       F2: Previsous Values
                                       F9: Optimized Defaults
                                       F10: Save & Exit
                                       ESC: Exit

Version 2.15.1226. Copyright (C) 2012 American Megatrends, Inc.
```

Figure 149: Advanced - Memory Configuration

BIOS setting	Function	Configuration options	Effect
Memory information	Displays main memory properties	Enter	Opens the submenu See "Memory information" on page 210
DIMM profile	Option for configuring the main memory timing profile	Default DIMM profile	Uses the default profile
		Custom profile	Uses a user-defined profile
		XMP Profile 1	Uses XMP profile 1
		XMP Profile 2	Uses XMP profile 2
Custom profile control[1]	Configuration of the main memory timing profile	Enter	Opens the submenu See "Custom profile control" on page 211
Memory frequency limiter[2]	Option for setting the maximum possible main memory frequency **Information:** **If a fan kit is not installed in the device, then the main memory frequency is limited to 1067 MHz when set to "Auto".**	Auto	Automatic configuration
		1067, 1333, 1600, 1867, 2133, 2400, 2667	Manual configuration
No fan memory frequency limiter	Option for automatically throttling down the main memory frequency when the system unit has no fan	Disabled	Disables this function
		Enabled	Enables this function
ECC support	Option for enabling/disabling main memory ECC support	Disabled	Disables this function
		Enabled	Enables this function
Max TOLUD[3]	Option for configuring the maximum "Top Of Low Usable DRAM"	Dynamic	Automatically adjusts the TOLUD based on the MMIO length of the graphics controller
		1 GB, 1.25 GB, 1.5 GB, 1.75 GB, 2 GB, 2.25 GB, 2.5 GB, 2.75 GB, 3 GB, 3.25 GB	Manual setting of the TOLUD
NMode support	Option for configuring NMode support	Auto	Sets automatically
		1N mode	Sets 1N mode
		2N mode	Sets 2N mode

Table 182: Advanced - Memory configuration - Configuration options

BIOS setting	Function	Configuration options	Effect
Memory scrambler	Option for enabling/disabling memory scrambler support	Enabled	Enables this function
		Disabled	Disables this function
Memory refresh rate	Option for configuring the RAM refresh rate	Disabled	Sets automatically
		x1	Manual setting
		x2	Manual setting
MRC fast boot	Option for enabling/disabling MRC fast booting	Enabled	Enables this function
		Disabled	Disables this function
Force cold reset	Option for enabling/disabling force cold resets	Enabled	Enables this function
		Disabled	Disables this function
DIMM exit mode	Option for configuring the DIMM exit mode	Auto	Sets automatically
		Slow exit	Enables slow exit mode
		Fast exit	Enables fast exit mode
Power down mode	Option for setting the power saving function for main memory	No power down	TBD
		APD	TBD
		PPD	TBD
		APD-PPD	TBD
Scrambler seed generation off	Option for enabling/disabling the scrambler seed generation off function	Enabled	Enables this function
		Disabled	Disables this function
Memory remap	Option for enabling/disabling memory remapping over 4 GB	Enabled	Enables this function
		Disabled	Disables this function
Memory alias check	Option for enabling/disabling the memory alias check function	Enabled	Enables this function
		Disabled	Disables this function
Channel A DIMM control	Option for configuring main memory channel A	Enable both DIMMS	Enables both channel A main memory modules
		Disable DIMM0	Disables channel A DIMM0 main memory
		Disable DIMM1	Disables channel A DIMM1 main memory
		Disable both DIMMS	Disables both channel A main memory modules
Channel B DIMM control	Option for configuring main memory channel B	Enable both DIMMS	Enables both channel B main memory modules
		Disable DIMM0	Disables channel B DIMM0 main memory
		Disable DIMM1	Disables channel B DIMM1 main memory
		Disable both DIMMS	Disables both channel B main memory modules

Table 182: Advanced - Memory configuration - Configuration options

1) This setting is only shown if *DIMM profile* is set to *Custom profile*.
2) This setting is only possible if *No fan memory frequency limiter* is set to *Disabled*.
3) TOLUD = Top of Low Usable DRAM

1.4.10.1 Memory information

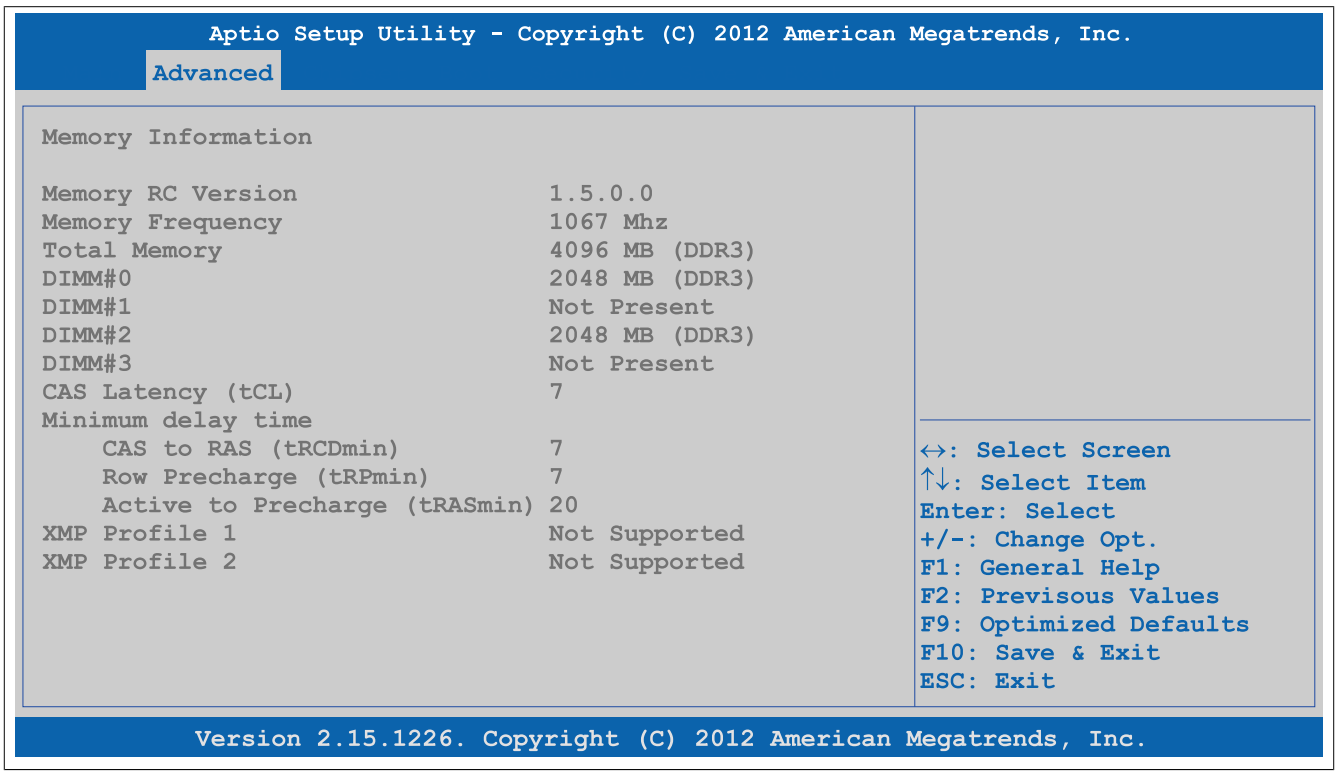

Figure 150: Advanced - Memory Configuration - Memory Information

BIOS setting	Function	Configuration options	Effect
Memory RC version	Displays the main memory RC version	None	-
Memory frequency	Displays the main memory frequency	None	-
Total memory	Displays the total amount of main memory	None	-
DIMM#0	Displays the amount of main memory in DIMM slot 0	None	-
DIMM#1	Displays the amount of main memory in DIMM slot 1	None	-
DIMM#2	Displays the amount of main memory in DIMM slot 2	None	-
DIMM#3	Displays the amount of main memory in DIMM slot 3	None	-
CAS latency (tCL)	Displays the CAS latency	None	-
Minimum delay time			
CAS to RAS (tRCDmin)	Displays the delay time between CAS# and RAS#	None	-
Row precharge (tRPmin)	Displays the row precharge time	None	-
Active to precharge (tRASmin)	Displays the minimum active RAS# time	None	-
XMP Profile 1	Displays XMP profile 1	None	-
XMP Profile 2	Displays XMP profile 2	None	-

Table 183: Advanced - Memory configuration - Memory information

1.4.10.2 Custom profile control

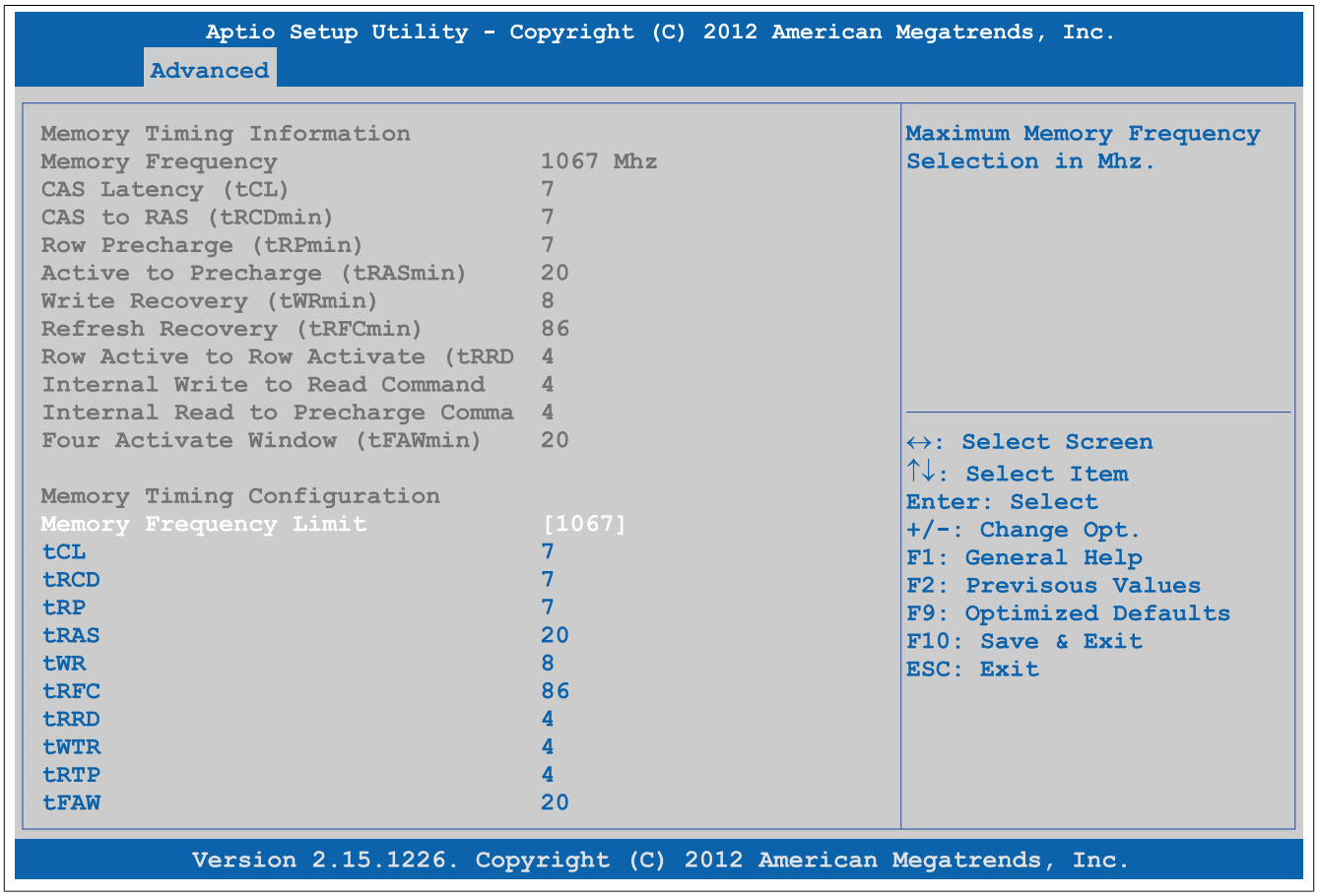

Figure 151: Advanced - Memory Configuration - Custom Profile Control

BIOS setting	Function	Configuration options	Effect
Memory frequency limiter	Sets the maximum main memory frequency in MHz	1067, 1333, 1600, 1867, 2133, 2400, 2667	
tCL	Sets the CAS latency	4 to 18	
tRCD	Sets the minimum "CAS to RAS" time	1 to 38	
tRP	Sets the minimum "Row precharge" time	1 to 38	
tRAS	Sets the minimum "Active to precharge" time	1 to 586	
tWR	Sets the minimum "Write recovery" time	1 to 38	
tRFC	Sets the minimum "Refresh recovery" time	1 to 9363	
tRRD	Sets the minimum "Row active to row active" time	1 to 38	

Table 184: Advanced - Memory configuration - Custom profile control - Configuration options

BIOS setting	Function	Configuration options	Effect
tWTR	Sets the minimum "Internal write to read command" time	1 to 38	
tRTP	Sets the minimum "Internal read to precharge command" time	1 to 38	
tFAW	Sets the minimum "Four active window" time	1 to 586	

Table 184: Advanced - Memory configuration - Custom profile control - Configuration options

1.4.11 USB configuration

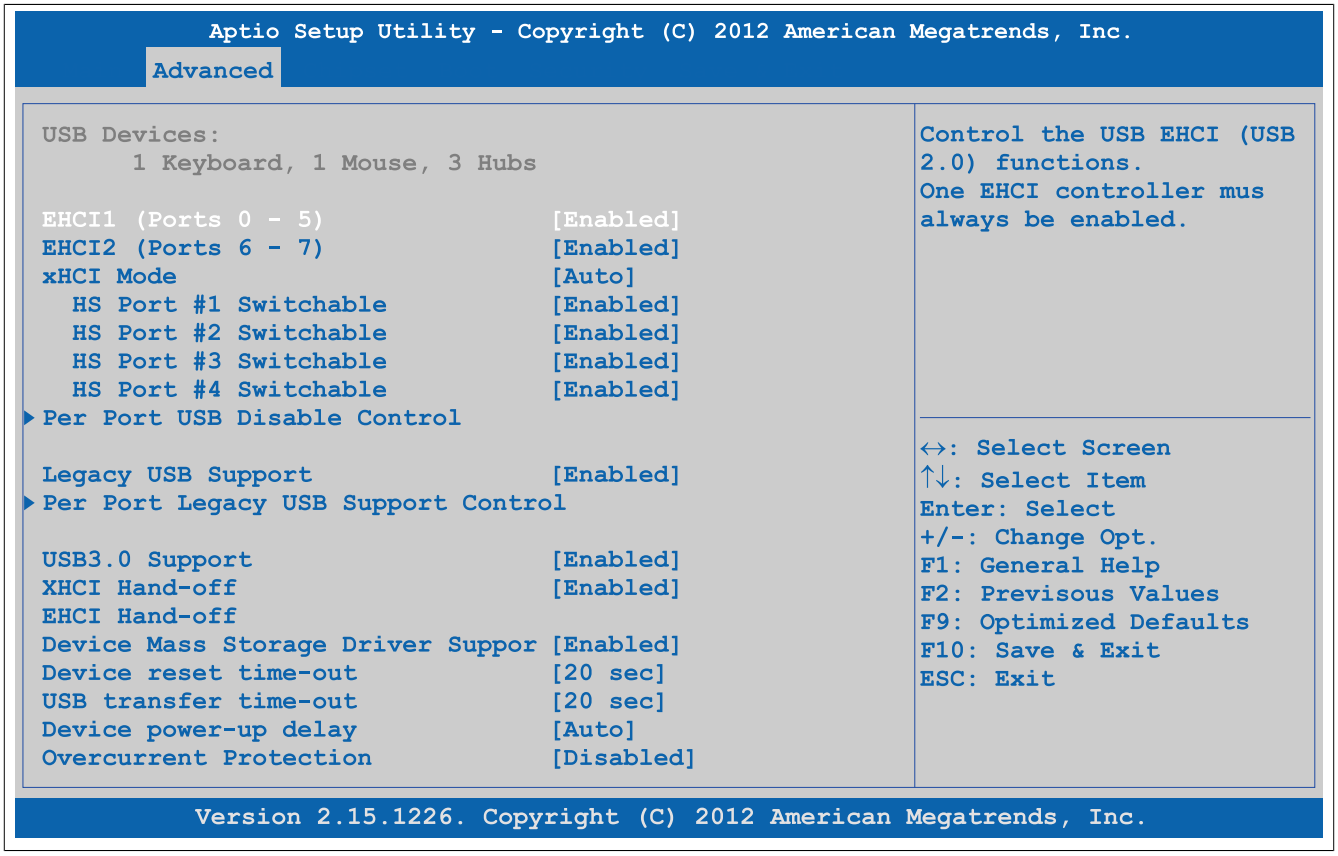

Figure 152: Advanced - USB Configuration

BIOS setting	Function	Configuration options	Effect
EHCI1 (ports 0-5)	Sets USB EHCI controller 1 for USB ports #0 through #5 (USB1 through USB4 on the system unit, USB on the monitor/panel interface and the bus unit)	Enabled	Enables EHCI controller 1
		Disabled	Disables EHCI controller 1
EHC2 (ports 6-7)	Sets USB EHCI controller 1 for USB ports #6 through #7 (USB5 on the system unit and USB on the monitor/panel option)	Enabled	Enables EHCI controller 2
		Disabled	Disables EHCI controller 2
xHCI mode	Option for configuring the xHCI controller	Smart auto	The USB 3.0 ports are not handled as USB 3.0 until after the operating system has started. Before that, they are handled as USB 2.0 ports. If the APC910 is rebooted, then the USB 3.0 ports are handled as USB 3.0 during booting.
		Auto	During the BIOS boot procedure, USB 3.0 ports are handled as USB 2.0 ports. They are not handled as USB 3.0 ports until after the operating system has started and the USB 3.0 driver has been loaded.
		Enabled	Enables the xHCI controller so that USB 3.0 ports are always identified as such
		Disabled	Disables the xHCI controller. All USB 3.0 ports become USB 2.0 ports.
HS port #1 switchable	Option to switch HS port 1 between xHCI and EHCI	Disabled	Routes port 1 to EHCI and operates it as USB 2.0.
		Enabled	Routes port 1 to xHCI and enables the corresponding HS port
HS port #2 switchable	Option to switch HS port 2 between xHCI and EHCI	Disabled	Routes port 2 to EHCI and operates it as USB 2.0.
		Enabled	Routes port 2 to xHCI and enables the corresponding HS port

Table 185: Advanced - USB configuration - Configuration options

BIOS setting	Function	Configuration options	Effect
HS port #3 switchable	Option to switch HS port 3 between xHCI and EHCI	Disabled	Routes port 3 to EHCI and operates it as USB 2.0.
		Enabled	Routes port 3 to xHCI and enables the corresponding HS port
HS port #4 switchable	Option to switch HS port 4 between xHCI and EHCI	Disabled	Routes port 4 to EHCI and operates it as USB 2.0.
		Enabled	Routes port 4 to xHCI and enables the corresponding HS port
Per port USB disable control	Option for enabling/disabling individual USB ports	Enter	Opens the submenu See "Per port USB disable control" on page 214
Legacy USB support	Option for configuring legacy USB support. USB ports do not function during startup. USB support is available again after the operating system has started. A USB keyboard is still recognized during POST.	Enabled	Enables this function
		Disabled	Disables this function
		Auto	Automatic enabling
Per port legacy USB support control	Option for enabling/disabling legacy support for individual USB ports	Enter	Opens the submenu See "Per port legacy USB support control" on page 215
USB 3.0 support	Option for enabling or disabling USB 3.0 mode	Enabled	Uses USB 3.0 for all USB 3.0 ports
		Disabled	Uses USB 2.0 or 1.1 for all USB ports
XHCI hand-off	Option for configuring support for operating systems without a fully automated XHCI function	Enabled	Enables USB 3.0 support
		Disabled	Disables this function With operating systems that do not have a fully automated XHCI function, USB devices are only operated with USB 2.0.
EHCI hand-off	Option for configuring support for operating systems without a fully automated EHCI function	Disabled	Disables this function With operating systems that do not have a fully automated EHCI function, USB devices are only operated with USB 1.1.
		Enabled	Enables USB 2.0 support
Device mass storage driver support	Option for enabling/disabling USB mass storage device support	Enabled	Enables this function
		Disabled	Disables this function
Device reset time-out	Option for configuring the time that POST waits for USB memory storage devices after the device start command is issued	10 sec, 20 sec, 30 sec, 40 sec	Value in seconds
USB transfer time-out	Option for configuring the timeout value for control, bulk and interrupt transfers	1 sec, 5 sec, 10 sec, 20 sec	Value in seconds
Device power-up delay	Option to set the maximum time to wait for a USB device to report to the host controller	Auto	Sets the maximum time automatically. For a root port, 100 ms is set; for a hub port, the data from the hub descriptor is used.
		Manual	Allows the maximum time to be entered manually using the "Device power-up delay in seconds" option
Device power-up delay in seconds[1)]	Option for setting the device power-up delay time manually	1 to 40	Value in seconds
Overcurrent protection	Option for configuring overcurrent protection for all USB ports	Disabled	Disables this function
		Enabled	Enables this function

Table 185: Advanced - USB configuration - Configuration options

1) This setting is only possible if *Device power-up delay* is set to *Manual*.

1.4.11.1 Per port USB disable control

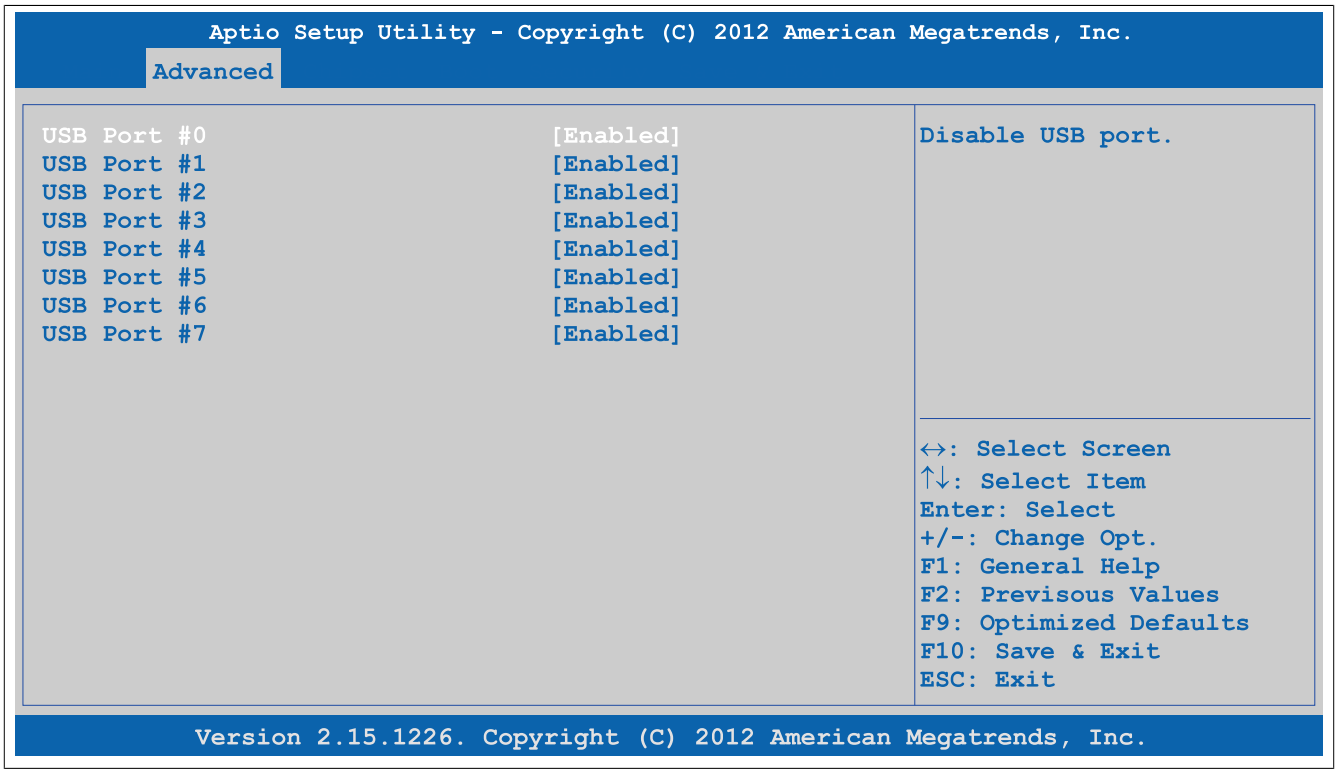

Figure 153: Advanced - USB Configuration - Per Port USB Disable Control

BIOS setting	Function	Configuration options	Effect
USB port #0	Option for enabling/disabling the USB4 port	Disabled	Disables the USB port
		Enabled	Enables the USB port
USB port #1	Option for enabling/disabling the USB2 port	Disabled	Disables the USB port
		Enabled	Enables the USB port
USB port #2	Option for enabling/disabling the USB3 port	Disabled	Disables the USB port
		Enabled	Enables the USB port
USB port #3	Option for enabling/disabling the USB1 port	Disabled	Disables the USB port
		Enabled	Enables the USB port
USB port #4	Option for enabling/disabling the USB port on the bus unit	Disabled	Disables the USB port
		Enabled	Enables the USB port
USB port #5	Option for enabling/disabling the USB port on the monitor/panel interface	Disabled	Disables the USB port
		Enabled	Enables the USB port
USB port #6	Option for enabling/disabling the USB5 port	Disabled	Disables the USB port
		Enabled	Enables the USB port
USB port #7	Option for enabling/disabling the USB port on the monitor/panel option	Disabled	Disables the USB port
		Enabled	Enables the USB port

Table 186: Advanced - USB configuration - Per port USB disable control - Configuration options

1.4.11.2 Per port legacy USB support control

```
Aptio Setup Utility - Copyright (C) 2012 American Megatrends, Inc.
Advanced

USB0 Port Legacy Support        [Enabled]      Enable or disable legacy
USB1 Port Legacy Support        [Enabled]      USB support for this port.
USB2 Port Legacy Support        [Enabled]      Enabled is only effective
USB3 Port Legacy Support        [Enabled]      if the port is not
USB4 Port Legacy Support        [Enabled]      disabled with other
USB5 Port Legacy Support        [Enabled]      setting in USB
USB6 Port Legacy Support        [Enabled]      Configuration menu.
USB7 Port Legacy Support        [Enabled]

                                               ↔: Select Screen
                                               ↑↓: Select Item
                                               Enter: Select
                                               +/-: Change Opt.
                                               F1: General Help
                                               F2: Previsous Values
                                               F9: Optimized Defaults
                                               F10: Save & Exit
                                               ESC: Exit

Version 2.15.1226. Copyright (C) 2012 American Megatrends, Inc.
```

Figure 154: Advanced - USB Configuration - Per Port Legacy USB Support Control

BIOS setting	Function	Configuration options	Effect
USB0 port legacy support	Option for enabling/disabling legacy support for the USB4 port	Disabled	Disables the USB port
		Enabled	Enables the USB port
USB1 port legacy support	Option for enabling/disabling legacy support for the USB2 port	Disabled	Disables the USB port
		Enabled	Enables the USB port
USB2 port legacy support	Option for enabling/disabling legacy support for the USB3 port	Disabled	Disables the USB port
		Enabled	Enables the USB port
USB3 port legacy support	Option for enabling/disabling legacy support for the USB1 port	Disabled	Disables the USB port
		Enabled	Enables the USB port
USB4 port legacy support	Option for enabling/disabling legacy support for the USB port on the bus unit	Disabled	Disables the USB port
		Enabled	Enables the USB port
USB5 port legacy support	Option for enabling/disabling legacy support for the USB port on the monitor/panel interface	Disabled	Disables the USB port
		Enabled	Enables the USB port
USB6 port legacy support	Option for enabling/disabling legacy support for the USB5 port	Disabled	Disables the USB port
		Enabled	Enables the USB port
USB7 port legacy support	Option for enabling/disabling legacy support for the USB port on the monitor/panel option	Disabled	Disables the USB port
		Enabled	Enables the USB port

Table 187: Advanced - USB configuration - Per port legacy USB support control - Configuration options

1.4.12 Serial port console redirection

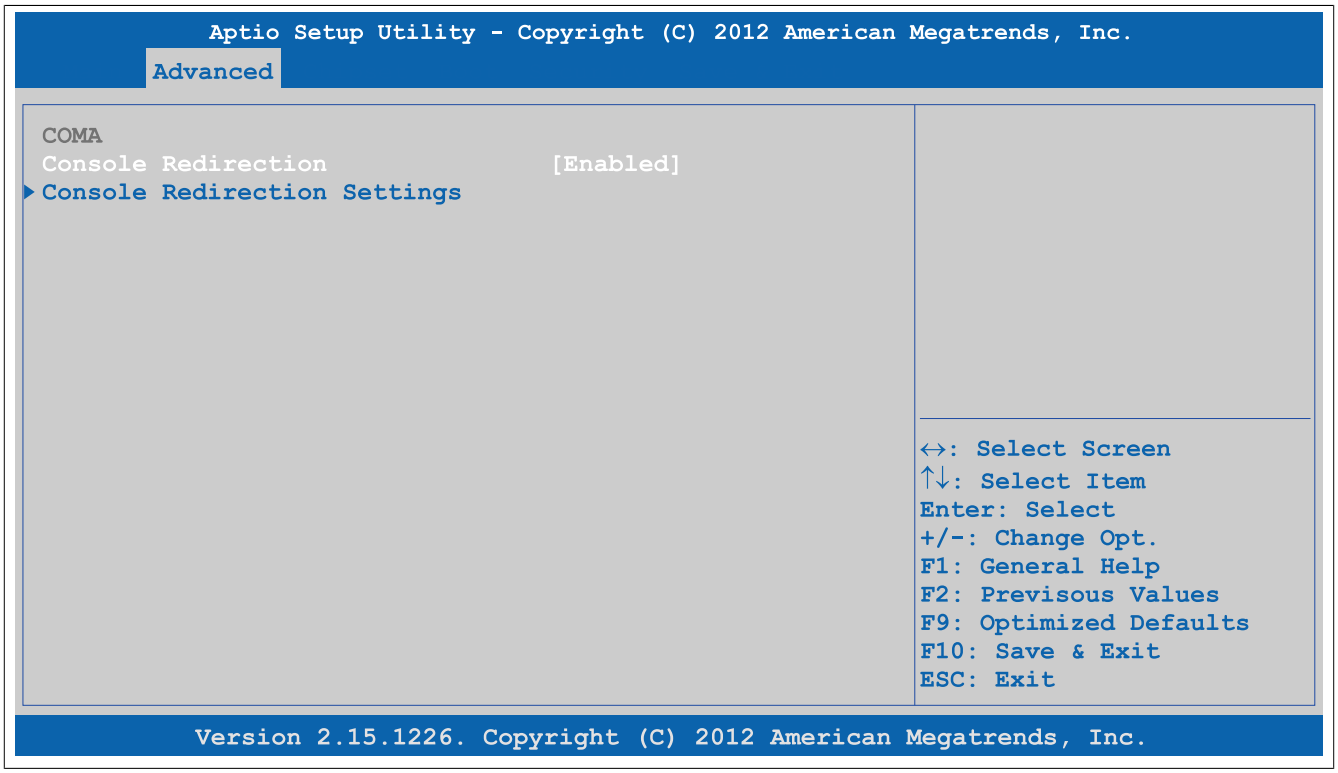

Figure 155: Advanced - Serial Port Console Redirection

BIOS setting	Function	Configuration options	Effect
Console redirection	Option for enabling/disabling console redirection	Disabled	Disables this function
		Enabled	Enables this function
Console redirection settings	Configures the remote console	Enter	Opens the submenu See "Console redirection settings" on page 217

Table 188: Advanced - Serial port console redirection - Configuration options

1) This setting is only possible if *Device power-up delay* is set to *Manual*.

1.4.12.1 Console redirection settings

```
Aptio Setup Utility - Copyright (C) 2012 American Megatrends, Inc.
Advanced

COMA
Console Redirection Settings

Terminal Type                        [ANSI]
Baudrate                             [115200]
Data Bits                            [8]
Parity                               [None]
Stop Bits                            [1]
Flow Control                         [None]
VT-UTF8 Combo Key Support            [Enabled]
Recorder Mode                        [Disabled]
Resolution 100x31                    [Disabled]
Legacy OS Redirection Resolution     [80x24]
Putty KeyPad                         [VT100]

↔: Select Screen
↑↓: Select Item
Enter: Select
+/-: Change Opt.
F1: General Help
F2: Previsous Values
F9: Optimized Defaults
F10: Save & Exit
ESC: Exit

Version 2.15.1226. Copyright (C) 2012 American Megatrends, Inc.
```

Figure 156: Advanced - Console Redirection - Console Redirection Settings

BIOS setting	Function	Configuration options	Effect
Terminal type	Option for configuring keyboard input	VT100	Enables the VT100 convention (ASCII character set)
		VT100+	Enables the VT100+ convention (ASCII character set and support for color, function keys, etc)
		VT-UTF8	Enables the VT-UTF8 convention (uses UTF8 encoding to assign Unicode characters to one or more bytes)
		ANSI	Enables the ANSI convention (extended ASCII character set)
Baud rate	Option for setting the transfer rate of the serial interface (bits per second)	1200, 2400, 4800, 9600, 19200, 38400, 57600, 115200	Enables a transfer rate of x bits
Data bits	Option for configuring the character length (data bits) to use for serial communication	7	Character length with 7 bits
		8	Character length with 8 bits
Parity	Option for configuring the parity bit to use for serial communication	None	Parity bit not used
		Even	Uses an even number of parity bits
		Odd	Uses an odd number of parity bits
		Mark	Parity bit always 1
		Space	Parity bit always 0
Stop bits	Option for configuring the stop bits to use for serial communication	1	Uses 1 bit as the stop bit
		2	Uses 2 bits as the stop bit
Flow control	Option for configuring the data flow control	None	Disables data flow control
		Hardware RTS/CTS	Enables hardware handshake
VT-UTF8 combo key support	Option for enabling/disabling VT-UTF8 combo key support for ANSI and VT100 connections	Disabled	Disables this function
		Enabled	Enables this function
Recorder mode	Option for enabling/disabling recorder mode	Disabled	Disables this function
		Enabled	Enables this function When this setting is used, all control escape sequences are suppressed from the serial redirection output. This may lead to incorrectly formatted screen output but makes automatic storage of the serial console output easier.
Resolution 100x31	Option for enabling/disabling extended terminal resolution	Disabled	Disables this function
		Enabled	Enables this function
Legacy OS redirection resolution	Option for configuring the number of lines and columns for legacy OS redirection	80x24	Resolution of 80x24
		80x25	Resolution of 80x25
Putty keypad	TBD	VT100	TBD
		Linux	TBD
		XTERMR6	TBD
		SCO	TBD
		ESCN	TBD
		VT400	TBD

Table 189: Advanced - Console redirection - Console redirection settings - Configuration options

1.5 Boot

```
Aptio Setup Utility - Copyright (C) 2012 American Megatrends, Inc.
Main  Advanced  Boot  Security  Save & Exit

▸ Boot Device Priority                    Boot device priority sub
▸ Boot Configuration                      menu.

                                          ↔: Select Screen
                                          ↑↓: Select Item
                                          Enter: Select
                                          +/-: Change Opt.
                                          F1: General Help
                                          F2: Previsous Values
                                          F9: Optimized Defaults
                                          F10: Save & Exit
                                          ESC: Exit

Version 2.15.1226. Copyright (C) 2012 American Megatrends, Inc.
```

Figure 157: Boot

BIOS setting	Function	Configuration options	Effect
Boot device priority	Configures the boot order	Enter	Opens the submenu See "Boot device priority" on page 218
Boot configuration	Configures boot properties	Enter	Opens the submenu See "Boot configuration" on page 219

Table 190: Boot overview

1.5.1 Boot device priority

```
Aptio Setup Utility - Copyright (C) 2012 American Megatrends, Inc.
Boot

Boot Priority Selection          [Type Based]          Set boot priority
                                                       selection method.
Type Based Boot Priority                               Type Based: Determine boot
1st Boot Device                  [SATA 0 Drive]        priority by device type.
2nd Boot Device                  [SATA 1 Drive]        Device Bades: Determine
3rd Boot Device                  [SATA 2 Drive]        boot priority by specific
4th Boot Device                  [SATA 3 Drive]        device selection. Devices
5th Boot Device                  [USB Harddisk]        must be present, priority
6th Boot Device                  [USB CDROM]           will be changed if devices
7th Boot Device                  [Onboard LAN]         are removed or added.
8th Boot Device                  [Other BEV Device]
                                                       ↔: Select Screen
                                                       ↑↓: Select Item
                                                       Enter: Select
                                                       +/-: Change Opt.
                                                       F1: General Help
                                                       F2: Previsous Values
                                                       F9: Optimized Defaults
                                                       F10: Save & Exit
                                                       ESC: Exit

Version 2.15.1226. Copyright (C) 2012 American Megatrends, Inc.
```

Figure 158: Boot - Boot Device Priority

BIOS setting	Function	Configuration options	Effect
Boot priority selection	Option for determining the method for how drives should be booted	Device based	Only lists devices that are recognized by the system. The order of devices in this list can be changed. **Information:** **It is only possible to use either "Device based" or "Type based". Using both together is not permitted.**
		Type based	The boot sequence of a device type list can be changed. It is also possible to add device types that are not connected to this list. **Information:** **It is only possible to use either "Device based" or "Type based". Using both together is not permitted.**
1st boot device	Option for selecting drives to be used for booting	Disabled, SATA 0 drive, SATA 1 drive, SATA 2 drive, SATA 3 drive, USB floppy, USB hard disk, USB CDROM, Onboard LAN, External LAN, Other BEV device	Specifies the desired boot sequence
2nd boot device			
3rd boot device			
4th boot device			
5th boot device			
6th boot device			
7th boot device			
8th boot device			

Table 191: Boot - Boot device priority - Configuration options

1.5.2 Boot configuration

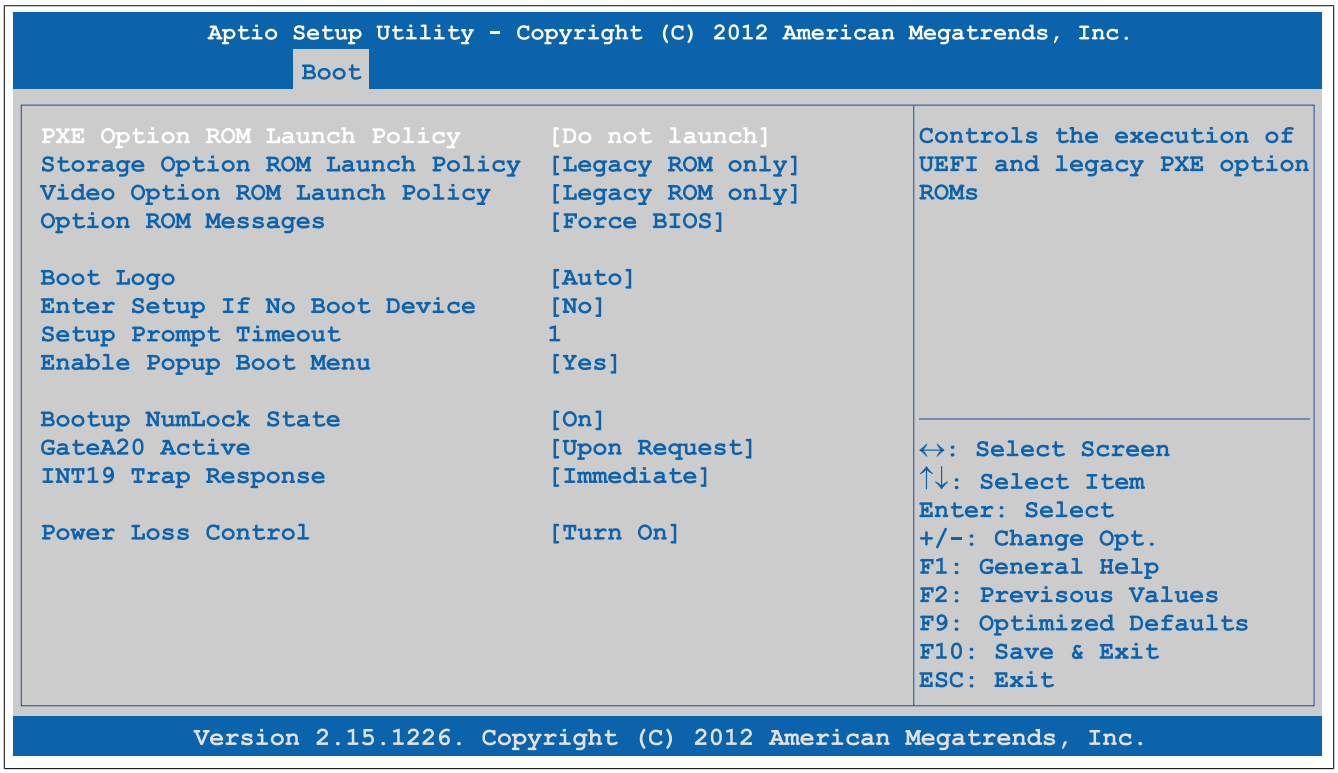

Figure 159: Boot - Boot Configuration

BIOS setting	Function	Configuration options	Effect
PXE Option ROM launch policy	Option for booting from PXE Option ROM	Do not launch	Does not boot from PXE Option ROM
		UEFI ROM only	Boots from UEFI ROM
		Legacy ROM only	Boots from legacy ROM
Storage Option ROM launch policy	Option for booting from Storage Option ROM	Do not launch	Does not boot from Storage Option ROM
		UEFI ROM only	Boots from UEFI ROM
		Legacy ROM only	Boots from legacy ROM
Video Option ROM launch policy	Option for booting from Video Option ROM	Do not launch	Does not boot from Video Option ROM
		UEFI ROM only	Boots from UEFI ROM
		Legacy ROM only	Boots from legacy ROM

Table 192: Boot - Boot configuration - Configuration options

BIOS setting	Function	Configuration options	Effect
Option ROM messages	Option to display Option ROM messages during POST	Force BIOS	Displays Option ROM messages during POST
		Keep current	Does not display Option ROM messages during POST
Boot logo	Option for configuring the boot logo	Disabled	Does not display the boot logo
		Enabled	Displays the boot logo
		Auto	Displays the boot logo
Enter setup if no boot device	Option for configuring whether the setup screen is displayed when no bootable drive is connected	No	Does not display the setup screen
		Yes	Displays the setup screen
Setup prompt timeout	Option for configuring how long the setup activation key (key for entering BIOS) is displayed	1 to 65534	Displays the setup activation key for x seconds
		65535	Displays the setup activation key for an unlimited amount of time
Enable popup boot menu	Option for enabling/disabling the popup boot menu	Yes	Enables this function. Pressing "F11" during POST allows a boot device to be selected.
		No	Disables this function. It is not possible to select a boot device during POST. Devices will boot in their configured order.
Bootup NumLock state	Option for configuring the numeric keypad when booting the system	On	Enables the numeric keypad
		Off	Only enables the cursor (movement) functions of the numeric keypad
GateA20 active	Option for defining how memory above 1 MB is accessed	Upon request	GA20 can be disabled.
		Always	GA20 is not disabled.
INT19 trap response	Option for configuring the interrupt trap response for the ROM option	Immediate	Executes the interrupt trap response immediately
		Postponed	Executes the interrupt trap response during the legacy boot
Power loss control	Specifies whether the system should be on/off following power loss	Remain off	Keeps the APC910 turned off
		Turn on	Turns on the APC910
		Last state	Enables the previous state

Table 192: Boot - Boot configuration - Configuration options

1.6 Security

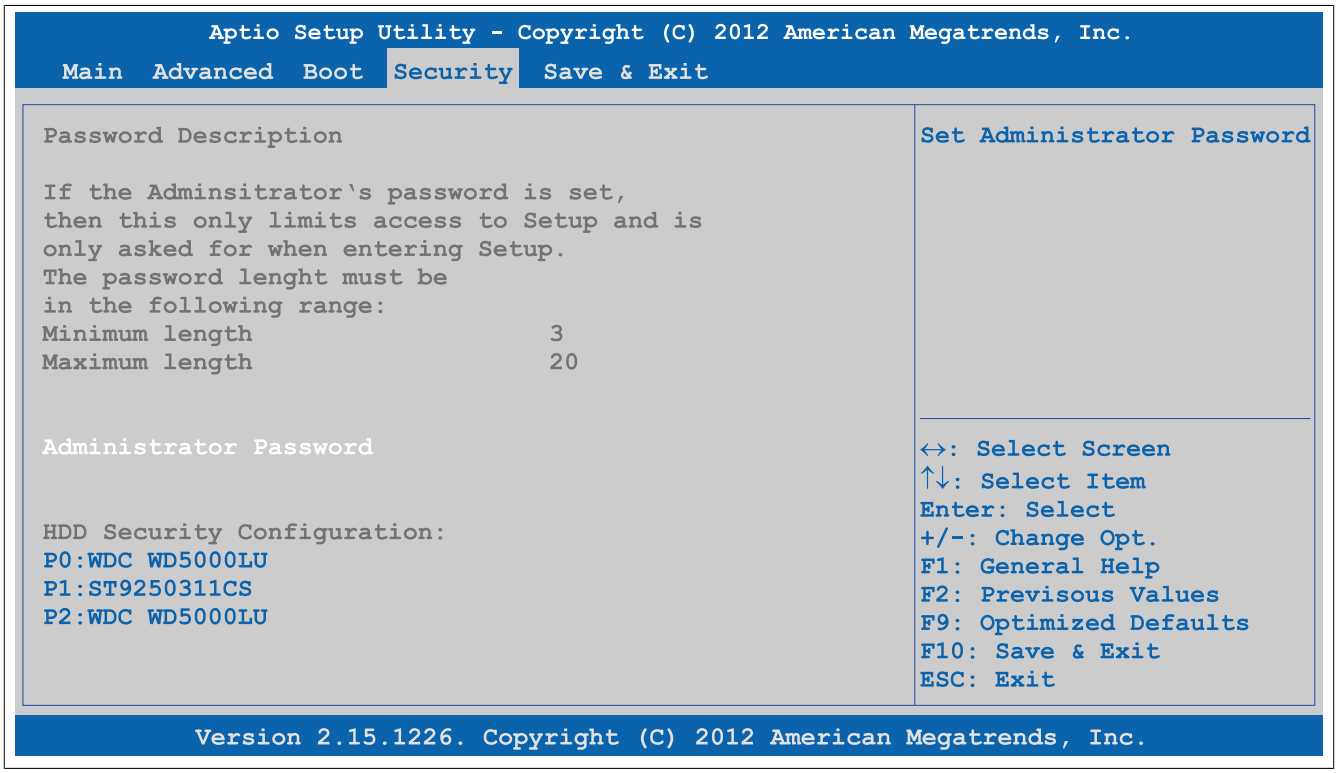

Figure 160: Security

BIOS setting	Function	Configuration options	Effect
Administrator password	Function for entering/changing the administrator password	Enter	Password entry

Table 193: Security menu - Configuration options

1.6.1 HDD user password

```
Aptio Setup Utility - Copyright (C) 2012 American Megatrends, Inc.
                    Security

HDD Password Description                    Set HDD User Password.
                                            *** Advisable to Power
Allows Access to Set, Modify and Clear      Cycle System after Setting
HardDisk User and Master Passwords.         Hard Disk Passwords ***
User Password need to be installed for
Enabling Security. Master Password can
be Modified only when successfully unlocked
with Master Password in POST.

HDD PASSWORD CONFIGURATION:

Security Supported        :     YES         ↔: Select Screen
Security Enabled          :     No          ↑↓: Select Item
Security Locked           :     No          Enter: Select
Security Frozen           :     No          +/-: Change Opt.
HDD User Pwd Status             NOT INSTALLED F1: General Help
HDD Master Pwd Status           INSTALLED   F2: Previsous Values
                                            F9: Optimized Defaults
Set User Password                           F10: Save & Exit
                                            ESC: Exit
Version 2.15.1226. Copyright (C) 2012 American Megatrends, Inc.
```

Figure 161: Security - HDD user password

BIOS setting	Function	Configuration options	Effect
User password	Function for entering/changing a user password.	Enter	Password entry

Table 194: Security - HDD user password - Configuration options

1.7 Save & Exit

```
Aptio Setup Utility - Copyright (C) 2012 American Megatrends, Inc.
Main  Advanced  Boot  Security  Save & Exit

Save Changes and Exit                       Exit system setup after
Discard Changes and Exit                    saving the changes.
Save Changes and Reset
Discard Changes and Reset

Save Options
Save Changes
Discard Changes

Restore Defaults

                                            ↔: Select Screen
                                            ↑↓: Select Item
                                            Enter: Select
                                            +/-: Change Opt.
                                            F1: General Help
                                            F2: Previsous Values
                                            F9: Optimized Defaults
                                            F10: Save & Exit
                                            ESC: Exit
Version 2.15.1226. Copyright (C) 2012 American Megatrends, Inc.
```

Figure 162: Save & Exit

BIOS setting	Function	Configuration options	Effect
Save changes and exit	Selecting this option closes BIOS Setup. Any changes made are saved to CMOS after confirmation.	Yes / No	
Discard changes and exit	Selecting this option closes BIOS Setup without saving any changes made.	Yes / No	
Save changes and reset	Selecting this option closes BIOS Setup. Any changes made are saved to CMOS after confirmation, and the system is rebooted.	Yes / No	
Discard changes and reset	Selecting this option closes BIOS Setup without saving any changes made. The system is then rebooted.	Yes / No	
Save changes	Any changes made are saved to CMOS after confirmation.	Yes / No	
Discard changes	This option can be used to reset any settings that may have been made but have been forgotten in the meantime (provided they have not yet been saved).	Yes / No	
Restore defaults	This option restores BIOS default values.	Yes / No	

Table 195: Save & Exit menu - Configuration options

1.8 BIOS default settings

BIOS default settings may vary depending on how the complete system is configured.

If the function "Restore defaults" is selected in the main BIOS setup menu, or if "Save & Exit" is selected (or F9 is pressed) in the individual setup screens, the following BIOS settings are the optimized values that will be used.

1.8.1 Advanced

1.8.1.1 Graphics configuration

Setting/Option	Default profile	My setting
Primary display	Auto	
Internal graphics	Auto	
IGFX VBIOS version	-	
GTT size	2 MB	
Aperture size	256 M	
DVMT pre-allocated	64 M	
DVMT total gfx mem	256 M	
Gfx low power mode	Disabled	
Graphics performance analyzers	Disabled	
Primary IGFX boot display	LFP	
Secondary IGFX boot display	CRT	
Active LFP configuration	Integrated LVDS	
Always try auto panel detect	No	
Local flat panel type	Auto	
Display Port B interface	Disabled	
Display Port C interface	Disabled	
Display Port D interface	HDMI/DVI	
Display mode persistence	Disabled	

Table 196: Advanced - Graphics configuration - Overview of profile settings

1.8.1.2 OEM features

Setting/Option	Default profile	My setting
Main BIOS version	-	
OEM BIOS version	-	
MTCX	-	
ETH2 MAC address	-	
Real-time environment	Disabled	

Table 197: Advanced - OEM features - Overview of profile settings

1.8.1.2.1 Super I/O configuration

Setting/Option	Default profile	My setting
Serial port A	Enabled	
Device settings	-	
Serial port B	Enabled	
Device settings	-	
Serial port C	Enabled	
Device settings	-	
Serial port D	Disabled	
Device settings	-	
Serial port E	Enabled	
Device settings	-	
Serial port F	Enabled	
Device settings	-	

Table 198: Advanced - OEM features - Super I/O configuration - Overview of profile settings

1.8.1.3 PCI configuration

Setting/Option	Default profile	My setting
Above 4G decoding	Disabled	
PCI latency timer	32 PCI bus clocks	
VGA palette snoop	Disabled	
PERR# generation	Disabled	
SERR# generation	Disabled	
PIRQ routing & IRQ reservation		
PIRQA	Auto	

Table 199: Advanced - PCI configuration - Overview of profile settings

Setting/Option	Default profile	My setting
PIRQB	Auto	
PIRQC	Auto	
PIRQD	Auto	
PIRQE	Auto	
PIRQF	Auto	
PIRQG	Auto	
PIRQH	Auto	
Reserve legacy interrupt 1	None	
Reserve legacy interrupt 2	None	

Table 199: Advanced - PCI configuration - Overview of profile settings

1.8.1.4 PCI Express configuration

1.8.1.4.1 PCI Express settings

Setting/Option	Default profile	My setting
Relaxed ordering	Disabled	
Extended tag	Disabled	
No snoop	Enabled	
Maximum payload	Auto	
Maximum read request	Auto	
ASPM	Disabled	
Extended synch	Disabled	
Link training retry	5	
Link training timeout (µS)	100	
Unpopulated links	Keep link on	

Table 200: Advanced - PCI Express configuration - PCI Express settings - Overview of profile settings

1.8.1.4.2 PCI Express GEN 2 settings

Setting/Option	Default profile	My setting
Completion timeout	Default	
ARI forwarding	Disabled	
AtomicOp requester enable	Disabled	
AtomicOp egress blocking	Disabled	
IDO request enable	Disabled	
IDO completion enable	Disabled	
LTR mechanism enable	Disabled	
End-End TLP prefix blocking	Disabled	
Target link speed	Auto	
Clock power management	Disabled	
Compliance SOS	Disabled	
Hardware autonomous width	Enabled	
Hardware autonomous speed	Enabled	

Table 201: Advanced - PCI Express configuration - PCI Express GEN 2 settings - Overview of profile settings

1.8.1.4.3 PCI Express graphics (PEG) port

Setting/Option	Default profile	My setting
PCI Express graphics (PEG) port	Disabled	

Table 202: Advanced - PCI Express configuration - PCI Express graphics (PEG) port - Overview of profile settings

1.8.1.4.4 PCI Express root port

Setting/Option	Default profile	My setting
PCI Express root port x	Enabled	
ASPM	Auto	
URR	Disabled	
FER	Disabled	
NFER	Disabled	
CER	Disabled	
CT0	Disabled	
SEFE	Disabled	
SENFE	Disabled	
SECE	Disabled	
PME SCI	Enabled	
Always enable port	Disabled	
PCIe speed	Auto	

Table 203: Advanced - PCI Express configuration - PCI Express root port - Overview of profile settings

Setting/Option	Default profile	My setting
Assign INT to root port	Enabled	
Extra bus reserved	0	
Reserved memory	10	
Prefetchable memory	10	
Reserved I/O	4	

Table 203: Advanced - PCI Express configuration - PCI Express root port - Overview of profile settings

1.8.1.5 ACPI settings

Setting/Option	Default profile	My setting
Enable hibernation	Enabled	
ACPI sleep state	Both S1 and S3 available for OS to choose from	
Lock legacy resources	Disabled	
S3 video repost	Disabled	
Critical trip point	111 C	

Table 204: Advanced - ACPI settings - Overview of profile settings

1.8.1.6 RTC wake settings

Setting/Option	Default profile	My setting
Wake system at fixed time	Disabled	

Table 205: Advanced - RTC wake settings - Overview of profile settings

1.8.1.7 CPU configuration

Setting/Option	Default profile	My setting
Hyper-threading	Enabled	
Active processor cores	All	
Limit CPUID maximum	Disabled	
Execute disable bit	Enabled	
Intel virtualization technology	Disabled	
Hardware prefetcher	Enabled	
Adjacent cache line prefetch	Enabled	
TCC activation offset	0	
Primary plane current value	0	
Secondary plane current value	0	
EIST	Enabled	
Turbo mode	Enabled	
CPU C3 report	Disabled	
CPU C6 report	Disabled	
CPU C7 report	Disabled	
Configurable TDP	TDP NOMINAL	
Config TDP LOCK	Disabled	
Long duration power limit	0	
Long duration maintained	1	
Short duration power limit	0	
ACPI T state	Disabled	

Table 206: Advanced - CPU configuration - Overview of profile settings

1.8.1.8 Chipset configuration

Setting/Option	Default profile	My setting
PCH LAN controller	Enabled	
Wake on LAN	Enabled	
Azalia	Auto	
Azalia PME	Disabled	
Azalia internal HDMI codec	Disabled	
High-precision timer	Enabled	
CF9h global reset	Host only	
PCI Express clock gating	Disabled	
DMI link ASPM PCH side	Disabled	
PCIe USB glitch W/A	Disabled	
SB CRID	Disabled	
NB CRID	Disabled	
DMI	-	
DMI Vc1 control	Enabled	
DMI Vcp control	Enabled	

Table 207: Advanced - Chipset configuration - Overview of profile settings

Setting/Option	Default profile	My setting
DMI Vcm control	Enabled	
DMI link ASPM CPU side	Disabled	
DMI extended synch control	Disabled	
DMI Gen 2	Auto	

Table 207: Advanced - Chipset configuration - Overview of profile settings

1.8.1.9 SATA configuration

Setting/Option	Default profile	My setting
SATA controller(s)	Enabled	
SATA mode selection	AHCI	
SATA test mode	Disabled	
Aggressive LPM support	Disabled	
SATA controller speed	Gen3	
Alternate ID	Disabled	
Serial ATA port 0	-	
Port 0	Enabled	
Hot plug	Disabled	
External SATA	Disabled	
SATA device type	Hard disk drive	
Spin up device	Disabled	
Serial ATA port 1	-	
Port 1	Enabled	
Hot plug	Disabled	
External SATA	Disabled	
SATA device type	Hard disk drive	
Spin up device	Disabled	
Serial ATA port 2	-	
Port 2	Enabled	
Hot plug	Disabled	
External SATA	Disabled	
Spin up device	Disabled	
Serial ATA port 3	-	
Port 3	Enabled	
Hot plug	Disabled	
External SATA	Disabled	
Spin up device	Disabled	

Table 208: Advanced - SATA configuration - Overview of profile settings

1.8.1.10 Memory configuration

Setting/Option	Default profile	My setting
DIMM profile	Default DIMM profile	
No fan memory frequency limiter	Enabled	
ECC support	Disabled	
Max TOLUD	Dynamic	
NMode support	Auto	
Memory scrambler	Enabled	
Memory refresh rate	Disabled	
MRC fast boot	Enabled	
Force cold reset	Enabled	
DIMM exit mode	Fast exit	
Power down mode	PPD	
Scrambler seed generation off	Disabled	
Memory remap	Enabled	
Memory alias check	Disabled	
Channel A DIMM control	Enable both DIMMS	
Channel B DIMM control	Enable both DIMMS	

Table 209: Advanced - Memory configuration - Overview of profile settings

1.8.1.11 USB configuration

Setting/Option	Default profile	My setting
EHCI1 (ports 0-5)	Enabled	
EHC2 (ports 6-7)	Enabled	
xHCI mode	Auto	
HS port #1 switchable	Enabled	
HS port #2 switchable	Enabled	
HS port #3 switchable	Enabled	

Table 210: Advanced - USB configuration - Overview of profile settings

Setting/Option	Default profile	My setting
HS port #4 switchable	Enabled	
Legacy USB support	Enabled	
USB 3.0 support	Enabled	
XHCI hand-off	Enabled	
EHCI hand-off	Disabled	
USB mass storage driver support	Enabled	
Device reset time-out	20 sec	
USB transfer time-out	20 sec	
Device power-up delay	Auto	
Overcurrent protection	Disabled	
Per port USB disable control		
USB port #0	Enabled	
USB port #1	Enabled	
USB port #2	Enabled	
USB port #3	Enabled	
USB port #4	Enabled	
USB port #5	Enabled	
USB port #6	Enabled	
USB port #7	Enabled	
Per port legacy USB support control		
USB0 port legacy support	Enabled	
USB1 port legacy support	Enabled	
USB2 port legacy support	Enabled	
USB3 port legacy support	Enabled	
USB4 port legacy support	Enabled	
USB5 port legacy support	Enabled	
USB6 port legacy support	Enabled	
USB7 port legacy support	Enabled	

Table 210: Advanced - USB configuration - Overview of profile settings

1.8.1.12 Serial port console redirection

Setting/Option	Default profile	My setting
Console redirection	Disabled	

Table 211: Advanced - Serial port console redirection - Overview of profile settings

1.8.2 Boot

1.8.2.1 Boot device priority

Setting/Option	Default profile	My setting
Boot priority selection	Type based	
1st boot device	SATA 0 drive	
2nd boot device	SATA 1 drive	
3rd boot device	SATA 2 drive	
4th boot device	SATA 3 drive	
5th boot device	USB hard disk	
6th boot device	USB CDROM	
7th boot device	Onboard LAN	
8th boot device	Other BEV device	

Table 212: Boot - Boot device priority - Overview of profile settings

1.8.2.2 Boot configuration

Setting/Option	Default profile	My setting
PXE Option ROM launch policy	Do not launch	
Storage Option ROM launch policy	Legacy ROM only	
Video Option ROM launch policy	Legacy ROM only	
Option ROM messages	Force BIOS	
Boot logo	Auto	
Enter setup if no boot device	No	
Setup prompt timeout	1	
Enable popup boot menu	Yes	
Bootup NumLock state	On	
GateA20 active	Upon request	
INT19 trap response	Immediate	
Power loss control	Turn on	

Table 213: Boot - Boot configuration - Overview of profile settings

1.9 Allocation of resources

1.9.1 RAM address assignment

RAM address	Address in hexadecimal	Resource
(TOM - xxxx) – TOM[1)]	N.A.	ACPI reclaim, PCI memory range, video
1024 kB – (TOM - xxxx)	100000 - N.A.	Extended memory
869 kB – 1024 kB	0E0000h - 0FFFFFh	Runtime BIOS
768 kB – 896 kB	0C0000h - 0DFFFFh	Expansion area
640 kB – 768 kB	0A0000h - 0BFFFFh	Video memory and BIOS
639 kB – 640 kB	09FC00h - 09FFFFh	Extended BIOS data
0 – 639 kB	000000h - 09FC00h	Conventional memory

Table 214: RAM address assignment

1) TOM = Top of memory: max. installed DRAM.

1.9.2 I/O address assignment

I/O address	Resource
0000h - 00FFh	Motherboard resources
0170h - 0177h	Secondary IDE channel
01F0h - 01F7h	Primary IDE channel
0228h - 022Fh	COMF (I/O board 2)
02E8h - 02EFh	COME (I/O board 1)
02F8h - 02FFh	COMB (COM2)
0376h - 0376h	Secondary IDE channel command port
0377h - 0377h	Secondary IDE channel status port
0384h - 0385h	CAN controller
03B0h - 03DFh	Video system
03E8h - 03EFh	COMC (SDL onboard)
03F6h - 03F6h	Primary IDE channel command port
03F7h - 03F7h	Primary IDE channel status port
03F8h - 03FFh	COMA (COM1)
0400h - 047Fh	Motherboard resources
0500h - 057Fh	Motherboard resources
0CF8h - 0CFBh	PCI config address register
0CFCh - 0CFFh	PCI config data register
0D00h - FFFFh	PCI / PCI Express bus
4100h - 417Fh	MTCX
FF00h - FF07h	IDE bus master register

Table 215: I/O address assignment

1.9.3 Interrupt assignments in PIC mode

IRQ		0	1	2	3	4	5	6	7	8	9	10	11	12	13	14	15	NONE
System timer		●																
Keyboard			●															
IRQ cascade				●														
COMA (COM1)					○	●	○	○	○			○	○	○				
COMB (COM2)					●	○	○	○	○									
ACPI[1)]											●							
Real-time clock										●								
Coprocessor (FPU)															●			
Primary IDE channel																●		
Secondary IDE channel																	●	
B&R	COMC (SDL onboard)				○	○	○	○	○			○	●	○				
	COME (IF Option 1 / I/O board 1)				○	○	○	○	○			●	○	○				
	COMF (IF Option 2 / I/O board 2)				○	○	○	○	●			○	○	○				
	CAN				○	○	○	○	○			●	○	○				

Table 216: IRQ interrupt assignments in PIC mode

1) **A**dvanced **C**onfiguration and **P**ower **I**nterface.

● ... Default setting
○ ... Optional setting

1.9.4 Interrupt assignments in APIC mode

A total of 23 IRQs are available in APIC (**A**dvanced **P**rogrammable **I**nterrupt **C**ontroller) mode. Enabling this option is only effective if done before the Windows operating system is installed.

IRQ		0	1	2	3	4	5	6	7	8	9	10	11	12	13	14	15	16	17	18	19	20	21	22	23	NONE
System timer		●																								
Keyboard			●																							
IRQ cascade				●																						
COMA (COM1)					○	●	○	○	○			○	○	○												
COMB (COM2)					●	○	○	○	○																	
ACPI[1]											●															
Real-time clock										●																
Coprocessor (FPU)															●											
Primary IDE channel																●										
Secondary IDE channel																	●									
B&R	COMC (SDL onboard)				○	○	○	○	○			○	●	○												
	COME (IF Option 1 / I/O board 1)				○	○	○	○	○			●	○	○												
	COMF (IF Option 2 / I/O board 2)				○	○	○	○	●			○	○	○												
	CAN				○	○	○	○	○			●	○	○												
PIRQ A[2]																		●								
PIRQ B[3]																			●							
PIRQ C[4]																				●						
PIRQ D[5]																					●					
PIRQ E[6]																						●				
PIRQ F[7]																							●			
PIRQ G[8]																								●		
PIRQ H[9]																									●	

Table 217: IRQ interrupt assignments in APIC mode

1) **A**dvanced **C**onfiguration and **P**ower **I**nterface.
2) PIRQ A: For PCIe; PEG 0/1/2, PCI Express root port 0, VGA controller, PCI Express root port 4 (ETH2)
3) PIRQ B: For PCIe; PCI Express root port 1, PCI Express root port 5
4) PIRQ C: For PCIe; PCI Express root port 2, SRAM
5) PIRQ D: For PCIe; PCI Express root port 3, PCIe to PCI bridge
6) PIRQ E: For PCIe; onboard gigabit LAN controller (ETH1)
7) PIRQ F: For PCIe; EHCI host controller 2, serial ATA controller 1, serial ATA controller 2
8) PIRQ G: For PCIe; Intel High Definition Audio controller, SMBus controller
9) PIRQ H: For PCIe; EHCI host controller 1, XHCI host controller

● ... Default setting
○ ... Optional setting

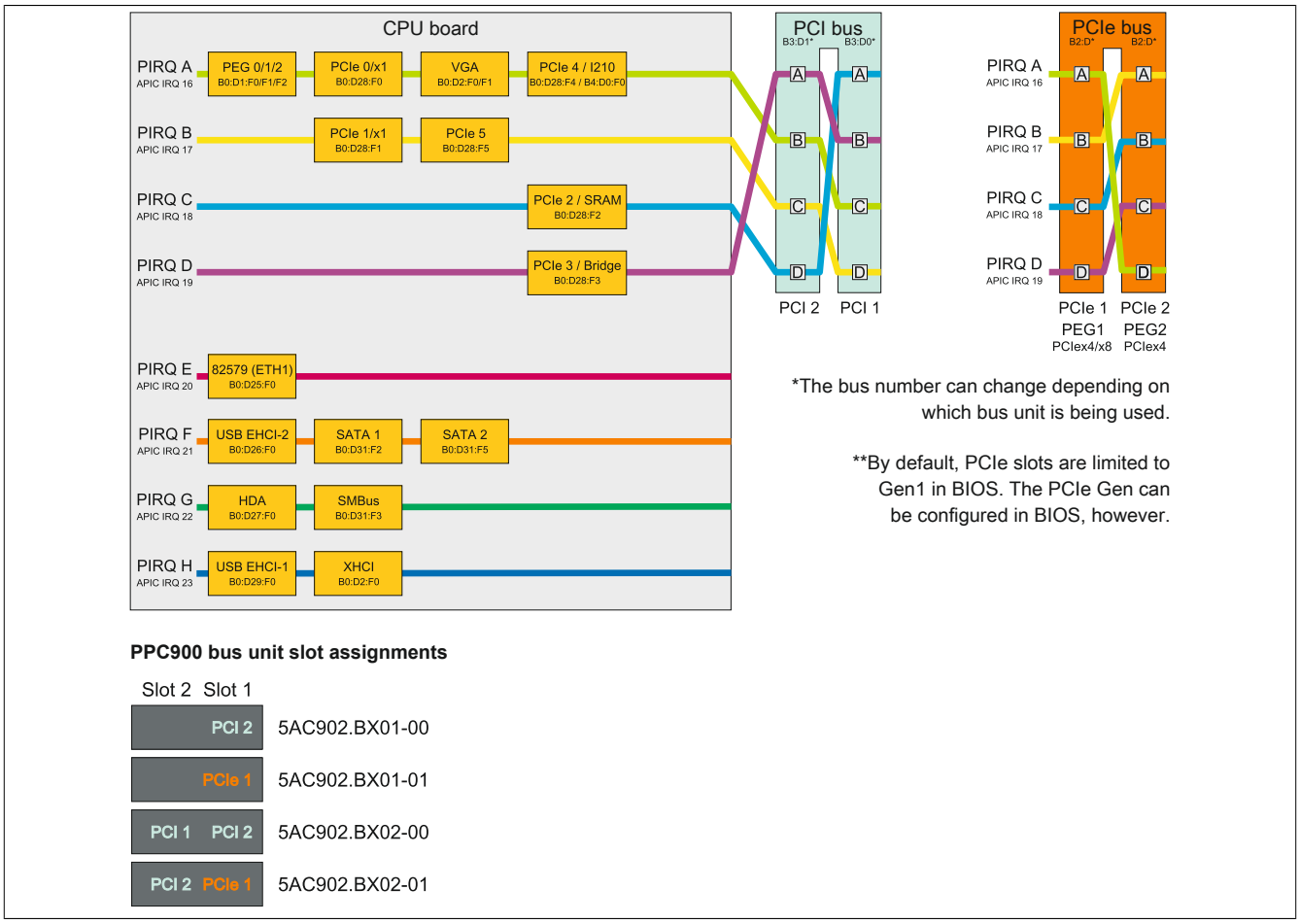

Figure 163: PCI and PCIe routing with enabled APIC for QM77/HM76 CPU boards

2 Upgrade information

> **Warning!**
>
> **The BIOS and firmware on B&R devices must be kept current. New versions can be downloaded from the B&R website (www.br-automation.com).**

2.1 BIOS upgrade

An upgrade may be necessary in order to accomplish the following:

- Updating implemented functions or adding newly implemented functions or components to BIOS Setup (information about changes can be found in the Readme file for the BIOS upgrade).

2.1.1 Important information

> **Information:**
>
> **Customized BIOS settings are deleted when upgrading BIOS.**

Before starting an upgrade, it helps to determine the various software versions.

2.1.1.1 Which BIOS version and firmware are already installed?

This information can be found on the following BIOS Setup screen:

- After switching on the PPC900, BIOS Setup can be accessed by pressing <Del>.
- From the "Advanced" menu in BIOS, select "OEM features".

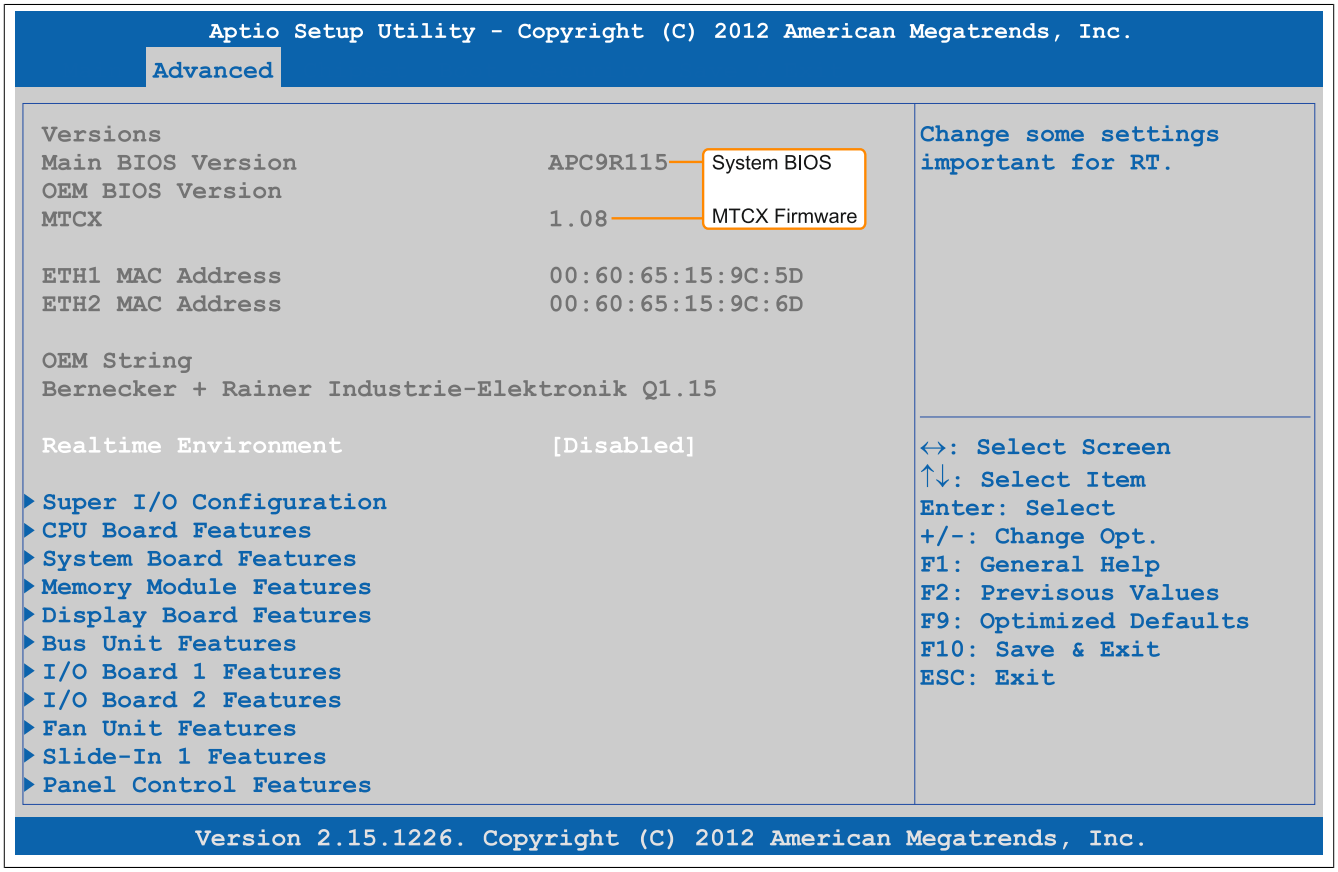

Figure 164: Software version

2.1.2 Procedure with MS-DOS

1. Download the .zip file from the B&R website (www.br-automation.com).
2. Create bootable media.

> **Information:**
>
> **In MS-DOS, Win95 and Win98, a blank HD disk can be made bootable by typing "sys a:" or "format a: /s" on the command line.**
> **Information about creating a bootable diskette in Windows XP can be found on page 234.**
>
> **Information on creating a USB flash drive for a B&R upgrade can be found on page 236.**
>
> **Information on creating a storage device for a B&R upgrade can be found on page 237.**

3. Copy the contents of the .zip file to the bootable media. If the B&R upgrade was already added when creating the bootable media with the B&R Embedded OS Installer, then this step is not necessary.
4. Connect the bootable media to the B&R device and reboot.
5. The following boot menu will be shown after startup:

```
1. Upgrade AMI BIOS for APC910/PPC900 (QM77 or HM76)
2. Exit
```

Item 1:
BIOS is automatically upgraded (default after 5 seconds).

Item 2:
Returns to the shell (MS-DOS)

> **Information:**
>
> **If a button is not pressed within 5 seconds, then item 1 is automatically carried out to update the industrial PC.**

6. The system must be rebooted after a successful upgrade.
7. Reboot and press <Del> to enter BIOS Setup and load the setup defaults, then select "Save changes and exit".

2.2 Firmware upgrade

The "Firmware upgrade (MTCX, SDLR, AP830, AP9x3)" software makes it possible to update the firmware for multiple controllers (MTCX, SDLR, AP830, AP9x3) depending on the PPC900 system variant.

The latest firmware upgrade is available in the Downloads section of the B&R website (www.br-automation.com).

2.2.1 Procedure

1. Download the .zip file from the B&R website (www.br-automation.com).
2. Open the **Control Center** in the Control Panel.
3. Select the **Versions** tab.
4. Under System unit, click on **Update** for **MTCX**. This brings up the "Open" dialog box.
5. Enter the name of the firmware file or select the file under **Filename**.
6. Click on **Open**. This brings up the "Open" dialog box.

The transfer can be canceled by clicking on **Cancel**. **Cancel** is disabled when writing to flash memory.

> **Warning!**
>
> **Do not press any panel keys while the firmware is being transferred! This can disrupt the procedure.**

Deleting the data in flash memory can take several seconds depending on the memory block being used. The progress indicator is not updated during this time.

> **Information:**
>
> **Power to the PC must be shut off and turned back on for the new firmware to take effect and for the updated version to be displayed. The user is prompted to do this when closing the Control Center.**

> **Information:**
>
> **For more information about saving and updating firmware, please refer to the help documentation for the Control Center.**

2.3 Creating an MS-DOS boot diskette in Windows XP

1. Insert a blank 1.44 MB HD diskette into the disk drive.
2. Open Windows Explorer.
3. Right-click on the 3½ floppy diskette icon and select "Format".

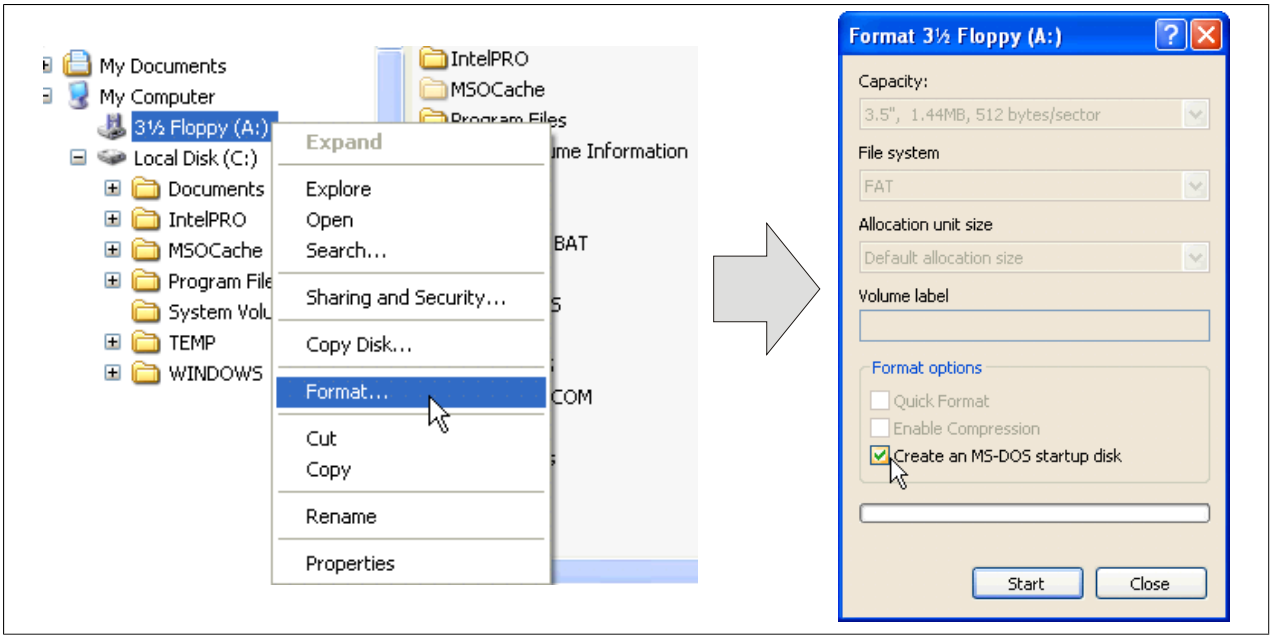

Figure 165: Creating a bootable diskette in Windows XP - Step 1

4. Select the **"Create an MS-DOS startup disk"** option, click on **"Start"** and acknowledge the warning message with "OK".

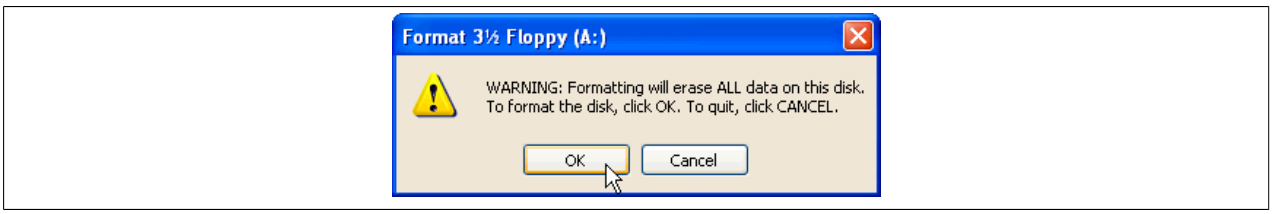

Figure 166: Creating a bootable diskette in Windows XP - Step 2

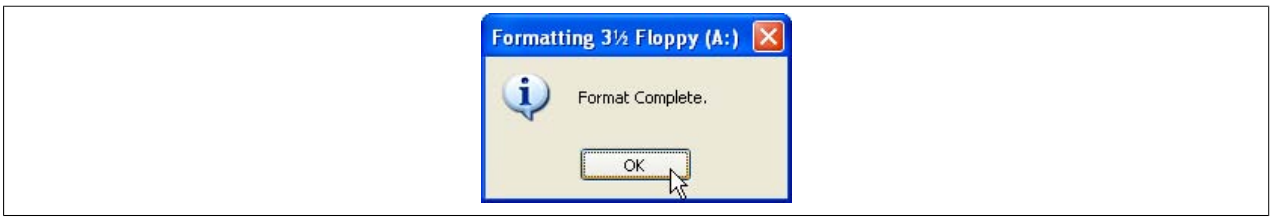

Figure 167: Creating a bootable diskette in Windows XP - Step 3

After creating the startup disk, some of the files must be deleted because of the size of the update.

To do this, all files (hidden system files, etc.) must be visible on the diskette.

In Windows Explorer, go to the "Tools" menu, select "Folder options" and open the "View" tab. Then deselect the option "Hide protected operating system files (Recommended)" (enabled by default) and enable the option "Show hidden files and folders".

before

Name	Size	Type	Date Modified
DISPLAY.SYS	17 KB	System file	6/8/2000 5:00 PM
EGA2.CPI	58 KB	CPI File	6/8/2000 5:00 PM
EGA3.CPI	58 KB	CPI File	6/8/2000 5:00 PM
EGA.CPI	58 KB	CPI File	6/8/2000 5:00 PM
KEYB.COM	22 KB	MS-DOS Application	6/8/2000 5:00 PM
KEYBOARD.SYS	34 KB	System file	6/8/2000 5:00 PM
KEYBRD2.SYS	32 KB	System file	6/8/2000 5:00 PM
KEYBRD3.SYS	31 KB	System file	6/8/2000 5:00 PM
KEYBRD4.SYS	13 KB	System file	6/8/2000 5:00 PM
MODE.COM	29 KB	MS-DOS Application	6/8/2000 5:00 PM

after

Name	Size	Type	Date Modified
AUTOEXEC.BAT	0 KB	MS-DOS Batch File	3/22/2006 10:08 AM
COMMAND.COM	91 KB	MS-DOS Application	6/8/2000 5:00 PM
CONFIG.SYS	0 KB	System file	3/22/2006 10:08 AM
DISPLAY.SYS	17 KB	System file	6/8/2000 5:00 PM
EGA2.CPI	58 KB	CPI File	6/8/2000 5:00 PM
EGA3.CPI	58 KB	CPI File	6/8/2000 5:00 PM
EGA.CPI	58 KB	CPI File	6/8/2000 5:00 PM
IO.SYS	114 KB	System file	5/15/2001 6:57 PM
KEYB.COM	22 KB	MS-DOS Application	6/8/2000 5:00 PM
KEYBOARD.SYS	34 KB	System file	6/8/2000 5:00 PM
KEYBRD2.SYS	32 KB	System file	6/8/2000 5:00 PM
KEYBRD3.SYS	31 KB	System file	6/8/2000 5:00 PM
KEYBRD4.SYS	13 KB	System file	6/8/2000 5:00 PM
MODE.COM	29 KB	MS-DOS Application	6/8/2000 5:00 PM
MSDOS.SYS	1 KB	System file	4/7/2001 1:40 PM

Figure 168: Creating a bootable diskette in Windows XP - Step 4

Name	Size	Type	Date Modified
AUTOEXEC.BAT	0 KB	MS-DOS Batch File	3/22/2006 10:08 AM
COMMAND.COM	91 KB	MS-DOS Application	6/8/2000 5:00 PM
CONFIG.SYS	0 KB	System file	3/22/2006 10:08 AM
DISPLAY.SYS	17 KB	System file	6/8/2000 5:00 PM
EGA2.CPI	58 KB	CPI File	6/8/2000 5:00 PM
EGA3.CPI	58 KB	CPI File	6/8/2000 5:00 PM
EGA.CPI	58 KB	CPI File	6/8/2000 5:00 PM
IO.SYS	114 KB	System file	5/15/2001 6:57 PM
KEYB.COM	22 KB	MS-DOS Application	6/8/2000 5:00 PM
KEYBOARD.SYS	34 KB	System file	6/8/2000 5:00 PM
KEYBRD2.SYS	32 KB	System file	6/8/2000 5:00 PM
KEYBRD3.SYS	31 KB	System file	6/8/2000 5:00 PM
KEYBRD4.SYS	13 KB	System file	6/8/2000 5:00 PM
MODE.COM	29 KB	MS-DOS Application	6/8/2000 5:00 PM
MSDOS.SYS	1 KB	System file	4/7/2001 1:40 PM

Figure 169: Creating a bootable diskette in Windows XP - Step 5

Now all files (selected) except Command.com, IO.sys and MSDOS.sys can be deleted.

2.4 Creating a bootable USB flash drive for B&R upgrade files

When used in connection with a B&R Industrial PC, it is possible to upgrade (e.g. upgrade BIOS) from one of the USB flash drives available from B&R. To do this, the USB flash drive must be prepared accordingly. This is done with the B&R Embedded OS Installer, which can be downloaded at no cost from the B&R website (www.br-automation.com).

2.4.1 Requirements

The following is required to create a bootable USB flash drive:

- B&R USB flash drive
- B&R Industrial PC
- USB media drive
- B&R Embedded OS Installer (V3.00 or higher)

2.4.2 Procedure

1. Connect the USB flash drive to the PC.
2. If the drive list is not refreshed automatically, the list can be updated using the command **Drives > Refresh**.
3. Select the desired USB flash drive in the drive list.
4. Change to the **Action** tab and select **Install a B&R update to a USB flash drive** as the type of action.
5. Enter the path to the MS-DOS operating system files. If the files are part of a .zip archive, then click on the button **From .zip file**. If the files are stored in a directory on the hard drive, then click on the button **From folder**.
6. In the **B&R upgrade** text box, it is also possible to enter the path to the .zip file for the B&R upgrade disk and select the file.
7. Click on the **Start action** button in the toolbar.

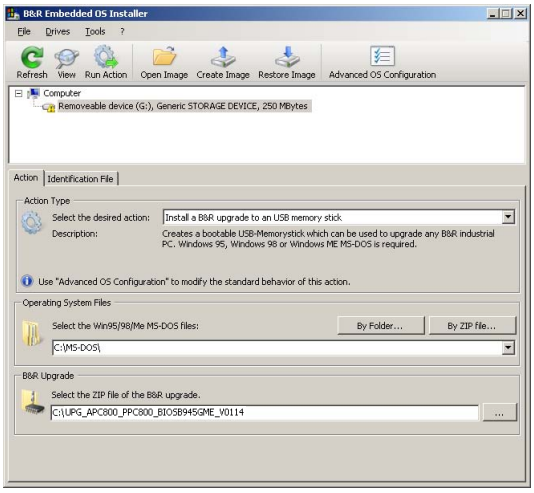

Figure 170: Creating a USB flash drive for B&R upgrade files

2.4.3 How to access MS-DOS

Information on creating an MS-DOS boot diskette can be found in section see "Creating an MS-DOS boot diskette in Windows XP" on page 234. The files from the diskette are then copied to the hard drive.

2.5 Creating a bootable mass storage device for B&R upgrade files

When used in connection with a B&R Industrial PC, it is possible to upgrade (e.g. upgrade BIOS) from a mass storage device (e.g. CFast card) available from B&R. To do this, the mass storage device must be prepared accordingly. This is done with the B&R Embedded OS Installer, which can be downloaded at no cost from the B&R website (www.br-automation.com).

2.5.1 Requirements

The following is required to create a bootable mass storage device:

- B&R mass storage device (e.g. CFast card)
- PC with CFast slot
- B&R Embedded OS Installer (V3.00 or higher)

2.5.2 Procedure

1. Connect the storage device to the PC.
2. If the drive list is not refreshed automatically, the list can be updated using the command **Drives > Refresh**.
3. Select the desired mass storage device from the list of drives.
4. Change to the **Action** tab and select **Install a B&R update to a mass storage device** as the type of action.
5. Enter the path to the MS-DOS operating system files. If the files are part of a .zip archive, then click on the button **From .zip file**. If the files are stored in a directory on the hard drive, then click on the button **From folder**.
6. In the **B&R upgrade** text box, it is also possible to enter the path to the .zip file for the B&R upgrade disk and select the file.
7. Click on the **Start action** button in the toolbar.

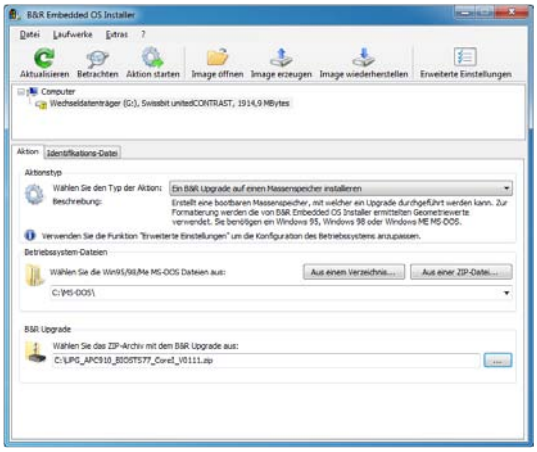

Figure 171: Creating a mass storage device for B&R upgrade files

2.5.3 How to access MS-DOS

Information on creating an MS-DOS boot diskette can be found in section "Creating an MS-DOS boot diskette in Windows XP" on page 234. The files from the diskette are then copied to the hard drive.

3 Windows 7

3.1 General information

Windows® 7 offers a wealth of innovative features and performance improvements. The 64-bit variants can also exploit the full power of current PC architectures. Faster switching to power saving mode, quicker restores, less memory usage and high-speed detection of USB devices are just a few of the advantages provided by Windows® 7. Both English and German are available in Windows® 7 Professional, while Windows® 7 Ultimate supports up to 35 different languages (up to 36 languages in Service Pack 1). Product activation is not necessary on B&R PCs, which is a huge advantage for simple logistical procedures relating to machine automation.

All of the Windows® operating systems offered by B&R are from the Microsoft Embedded division. This guarantees much longer availability, especially compared to products offered on the consumer market.

3.2 Order data

Model number	Short description	Figure
	Windows 7 Professional/Ultimate	
5SWWI7.1100-GER	Microsoft OEM Windows 7 Professional 32-bit, Service Pack 1, DVD, German. Only available with a new device.	
5SWWI7.1100-ENG	Microsoft OEM Windows 7 Professional 32-bit, Service Pack 1, DVD, English. Only available with a new device.	
5SWWI7.1200-GER	Microsoft OEM Windows 7 Professional 64-bit, Service Pack 1, DVD, German. Only available with a new device.	
5SWWI7.1200-ENG	Microsoft OEM Windows 7 Professional 64-bit, Service Pack 1, DVD, English. Only available with a new device.	
5SWWI7.1300-MUL	Microsoft OEM Windows 7 Ultimate 32-bit, Service Pack 1, DVD, multilingual. Only available with a new device.	
5SWWI7.1400-MUL	Microsoft OEM Windows 7 Ultimate 64-bit, Service Pack 1, DVD, multilingual. Only available with a new device.	

Table 218: 5SWWI7.1100-GER, 5SWWI7.1100-ENG, 5SWWI7.1200-GER, 5SWWI7.1200-ENG, 5SWWI7.1300-MUL, 5SWWI7.1400-MUL - Order data

3.3 Overview

Bestellnummer	Edition	Zielsystem	Chipsatz	Service Pack	Architek-tur	Sprache	Vorinstalliert	Benötigter Spe-icherplatz auf Datenträger	Mindestgröße Arbeitsspeicher
5SWWI7.1100-GER	Professional	APC510 APC511 APC810 APC910 PPC800 PPC900 PP500	945GME GM45 QM77/HM76 NM10 US15W	SP1	32-bit	German	Optional	16 GB	1 GB
5SWWI7.1100-ENG	Professional	APC510 APC511 APC810 APC910 PPC800 PPC900 PP500	945GME GM45 QM77/HM76 NM10 US15W	SP1	32-bit	English	Optional	16 GB	1 GB
5SWWI7.1200-GER	Professional	APC810 APC910 PPC800 PPC900	945GME Intel® Core™2 Duo GM45 QM77/HM76	SP1	64-bit	German	Optional	20 GB	2 GB
5SWWI7.1200-ENG	Professional	APC810 APC910 PPC800 PPC900	945GME Intel® Core™2 Duo GM45 QM77/HM76	SP1	64-bit	English	Optional	20 GB	2 GB
5SWWI7.1300-MUL	Ultimate	APC510 APC511 APC810 APC910 PPC800 PPC900 PP500	945GME GM45 QM77/HM76 NM10 US15W	SP1	32-bit	Multilingual	Optional	16 GB [1]	1 GB
5SWWI7.1400-MUL	Ultimate	APC810 APC910 PPC800 PPC900	945GME Intel® Core™2 Duo GM45 QM77/HM76	SP1	64-bit	Multilingual	Optional	20 GB [1]	2 GB

Table 219: Windows 7 - Overview

1) The memory used by additional language packs is not taken into account in the minimum size of the disk.

3.4 Installation

Upon request, B&R can preinstall the required Windows 7 version on the desired mass storage device (e.g. CompactFlash card, etc.). All of the drivers required for operation (graphics, network, etc.) are also installed in this process.

3.5 Drivers

Current drivers for all approved operating systems are available in the Downloads section of the B&R website www.br-automation.com.

> **Information:**
>
> **Required drivers can only be downloaded from the B&R website, not from manufacturer websites.**

3.6 Special considerations, limitations

- Windows 7 does not contain a Beep.sys file, which means that an audible signal is no longer sounded (e.g. when pressing a key).
- There is currently no support for the Windows 7 system rating (although this does not apply to PP500, APC510, APC511, APC910 or PPC800 devices with an NM10 chipset).

4 Windows Embedded Standard 7

4.1 General information

The successor to Windows® XP Embedded is Windows® Embedded Standard 7. As with previous versions, this embedded operating system offers full system support for B&R Industrial PCs. In addition to brand new features that are also included in Windows® 7 Professional, Windows® Embedded Standard 7 includes embedded components such as Enhanced Write Filter, File-Based Write Filter, Registry Filter and USB Boot. Windows® Embedded Standard 7 is available in two different versions. The main difference between them has to do with multilingual support. Windows® Embedded Standard 7 is only available in a single language, whereas Windows® Embedded Standard 7 Premium supports the installation of several languages simultaneously.

With Windows® Embedded Standard 7, Microsoft has made substantial improvements in the area of security. The AppLocker program, available in the premium version, can prevent the execution of unknown or potentially undesired applications that are being installed over a network or from drives that are directly connected. A tiered approach allows the differentiation between scripts (.ps1, .bat, .cmd, .vbs and .js), installation files (.msi, .msp) and libraries (.dll, .ocx). AppLocker can also be configured to record undesired activity and display it in the Event Viewer. Windows® Embedded Standard 7 is available in both a 32-bit and 64-bit version.[4)], which ensures that even the most demanding applications have the level of support they need.

4.2 Order data

Model number	Short description	Figure
	Windows Embedded Standard 7	
5SWWI7.1541-ENG	Windows Embedded Standard 7 SP1 - 32-bit - English - For PPC900 with QM77/HM76 chipset - License	
5SWWI7.1641-ENG	Windows Embedded Standard 7 SP1 - 64-bit - English - For PPC900 with QM77/HM76 chipset - License	
5SWWI7.1741-MUL	Windows Embedded Standard 7 Premium SP1 - 32-bit - Multilingual - For PPC900 with QM77/HM76 chipset - License	
5SWWI7.1841-MUL	Windows Embedded Standard 7 Premium SP1 - 64-bit - Multilingual - For PPC900 with QM77/HM76 chipset - License	
	Required accessories	
	CFast cards	
5CFAST.016G-00	CFast card, 16 GB	
5CFAST.032G-00	CFast card, 32 GB	
	Optional accessories	
	Windows Embedded Standard 7	
5SWWI7.1900-MUL	Microsoft OEM Windows Embedded Standard 7 32-bit, Service Pack 1, Language Pack DVD	
5SWWI7.2000-MUL	Microsoft OEM Windows Embedded Standard 7 64-bit, Service Pack 1, Language Pack DVD	

Table 220: 5SWWI7.1541-ENG, 5SWWI7.1641-ENG, 5SWWI7.1741-MUL, 5SWWI7.1841-MUL - Order data

4.3 Overview

Bestellnummer	Edition	Zielsystem	Chipsatz	Service Pack	Architektur	Sprache	Vorinstalliert	Mindestgröße Datenträger	Mindestgröße Arbeitsspeicher
5SWWI7.1541-ENG	Embedded	PPC900	QM77 HM76	SP1	32-bit	English	Optional	16 GB	1 GB
5SWWI7.1641-ENG	Embedded	PPC900	QM77 HM76	SP1	64-bit	English	Optional	16 GB	2 GB
5SWWI7.1741-MUL	Premium	PPC900	QM77 HM76	SP1	32-bit	Multilingual	Optional	16 GB [1)]	1 GB
5SWWI7.1841-MUL	Premium	PPC900	QM77 HM76	SP1	64-bit	Multilingual	Optional	16 GB [1)]	2 GB

1) The memory used by additional language packs is not taken into account in the minimum size of the disk.

4.4 Features with WES7 (Windows Embedded Standard 7)

The following list of features shows the most important device functions included in Windows Embedded Standard 7.

Function	Windows Embedded Standard 7	Windows Embedded Standard 7 Premium
Enhanced Write Filter (EWF)	✓	✓
File-Based Write Filter (FBWF)	✓	✓
Administrator accounts	✓	✓
User accounts	Configurable	Configurable

Table 221: Device functions in Windows Embedded Standard 7

4) 64-bit versions are not supported by all systems.

Function	Windows Embedded Standard 7	Windows Embedded Standard 7 Premium
Windows Explorer shell	✓	✓
Registry filter	✓	✓
Internet Explorer 8.0	✓	✓
Internet Information Service (IIS) 7.0	✓	✓
Anti-malware (Windows Defender)	-	✓
Add-ons (Snipping Tool, Sticky Notes)	-	✓
Windows Firewall	✓	✓
.NET Framework 3.5	✓	✓
32-bit and 64-bit	✓	✓
Remote Desktop Protocol 7.0	✓	✓
File Compression Utility	✓	✓
Windows Installer Service	✓	✓
Windows XP mode	-	-
Media Player 12	✓	✓
DirectX	✓	✓
Multilingual user interface packs in the same image	-	✓
International components and language services	✓	✓
Language pack setup	✓	✓
Windows update	Configurable	Configurable
Windows PowerShell 2.0	✓	✓
BitLocker	-	✓
AppLocker	-	✓
Tablet PC support	-	✓
Windows Touch	-	✓
Boot from USB flash drive	✓	✓
Accessories	✓	✓
Page file	Configurable	Configurable
Number of fonts	134	134

Table 221: Device functions in Windows Embedded Standard 7

4.5 Installation

Upon request, B&R can preinstall Windows Embedded Standard 7 on a suitable CFast card (32-bit: minimum 16 GB, 64-bit: minimum 16 GB). The system is then automatically configured when it is switched on for the first time. This procedure takes approximately 30 minutes, with the device being rebooted a number of times.

Information:

If the EWF should be used, all mass storage devices should be disconnected from the system during installation oder SYSPREP (except for the boot drive). It is also possible to disable additional mass storage devices in BIOS.

4.6 Drivers

All drivers required for operation are preinstalled along with the operating system. If an older version of the driver is still being used, the latest version can be downloaded and installed from the B&R website (www.br-automation.com). It is important that Enhanced Write Filter (EWF) is disabled for this.

4.6.1 Touch screen driver

A touch screen driver will be installed automatically if a touch controller is detected during the Windows Embedded Standard 7 installation. If a touch controller is not detected during Windows Embedded Standard 7 installation or a B&R Automation Panel is connected at a later time, then the touch screen driver needs to be installed manually or the additional touch screen interface must be selected in the touch screen settings in the Windows Control Panel. The driver is available in the Downloads section of the B&R website (www.br-automation.com). It is important that both the Enhanced Write Filter (EWF) and the File Based Write Filter (FBWF) are disabled for this.

Information:

Required drivers can only be downloaded from the B&R website, not from manufacturer websites.

5 Windows XP Professional

5.1 General information

> **Information:**
>
> **Discontinuation of support for Windows XP by Microsoft:**
>
> **After *April 8th, 2014* Microsoft will no longer be providing any security updates, hotfixes, support (free or paid) or technical resources for Windows XP.**

5.2 Order data

Model number	Short description	Figure
	Windows XP Professional	
5SWWXP.0600-GER	Microsoft OEM Windows XP Professional Service Pack 3, CD, German. Only available with a new device.	
5SWWXP.0600-ENG	Microsoft OEM Windows XP Professional Service Pack 3, CD, English. Only available with a new device.	
5SWWXP.0600-MUL	Microsoft OEM Windows XP Professional Service Pack 3, CD, multilingual. Only available with a new device.	

Table 222: 5SWWXP.0600-GER, 5SWWXP.0600-ENG, 5SWWXP.0600-MUL - Order data

5.3 Overview

Bestellnummer	Edition	Zielsystem	Chipsatz	Service Pack	Sprache	Vorinstalliert	Benötigter Speicherplatz auf Datenträger	Mindestgröße Arbeitsspeicher
5SWWXP.0600-GER	Professional	APC510 APC511 APC620 APC810 APC820 APC910 PPC700 PPC725 PPC800 PPC900 PP500	945GME GM45 QM77/HM76 NM10 US15W	SP3	German	Optional	≤2.1 GB	128 MB
5SWWXP.0600-ENG	Professional	APC510 APC511 APC620 APC810 APC820 APC910 PPC700 PPC725 PPC800 PPC900 PP500	945GME GM45 QM77/HM76 NM10 US15W	SP3	English	Optional	≤2.1 GB	128 MB
5SWWXP.0600-MUL	Professional	APC510 APC511 APC620 APC810 APC820 APC910 PPC700 PPC725 PPC800 PPC900 PP500	945GME GM45 QM77/HM76 NM10 US15W	SP3	Multilingual	Optional	≤2.1 GB	128 MB

5.4 Installation

Upon request, B&R can preinstall the required Windows XP Professional version on the desired mass storage device (e.g. CompactFlash card, etc.). All of the drivers required for operation (graphics, network, etc.) are also installed in this process.

5.5 Drivers

Current drivers for all approved operating systems are available in the Downloads section of the B&R website www.br-automation.com.

Information:

Required drivers can only be downloaded from the B&R website, not from manufacturer websites.

6 Windows Embedded Standard 2009

6.1 General information

Windows® Embedded Standard 2009 is the modular version of Windows® XP Professional. It is used if XP applications should be executed with a minimal operating system size. Together with CompactFlash memory, Windows® Embedded Standard 2009 makes it possible to use the Microsoft desktop operating system in harsh environmental conditions. In addition to the familiar features included in Windows® XP Professional, Windows® Embedded Standard 2009 has been improved with regard to dependability by adding a write filter for individual memory partitions. By protecting individual partitions such as the boot partition, the PC system can be started without problems even after an unexpected power failure. B&R offers complete images for industrial PCs, Power Panel and Mobile Panel devices to make the transition to Windows® Embedded Standard 2009 as easy as possible. In addition to Windows® Embedded Standard 2009, the standard Windows® XP Professional operating system is also available in English, German and a multilingual version.

Windows® Embedded Standard 2009 is based on the same binary files as Windows® XP Professional with Service Pack 3 and is optimally tailored to the hardware being used. In other words, only the functions and modules required by the respective device are included. Windows® Embedded Standard 2009 is also based on the same reliable code as Windows® XP Professional with SP3. It provides industry with leading reliability, security and performance improvements as well as the latest technology for web browsing and extensive device support.

6.2 Order data

Model number	Short description	Figure
	Windows Embedded Standard 2009	
5SWWXP.0741-ENG	Windows Embedded Standard 2009 - English - For PPC900 with QM77/HM76 chipset	
	Required accessories	
	CFast cards	
5CFAST.016G-00	CFast card, 16 GB	
5CFAST.032G-00	CFast card, 32 GB	
5CFAST.2048-00	CFast card, 2 GB	
5CFAST.4096-00	CFast card, 4 GB	
5CFAST.8192-00	CFast card, 8 GB	

Table 223: 5SWWXP.0741-ENG - Order data

6.3 Overview

Bestellnummer	Zielsystem	Chipsatz	Sprache	Vorinstalliert	Mindestgröße Datenträger	Mindestgröße Arbeitsspeicher
5SWWXP.0741-ENG	PPC900	QM77 HM76	English	Yes	2 GB	256 MB

6.4 Features with WES2009 (Windows Embedded Standard 2009)

The following list of features shows the most important device functions included in Windows Embedded Standard 2009.

Function	Present
Enhanced Write Filter (EWF)	✓
File-Based Write Filter (FBWF)	✓
Page file	Configurable
Administrator accounts	✓
User accounts	Configurable
Explorer shell	✓
Registry filter	✓
Internet Explorer 8.0	✓
Internet information service (IIS)	-
Terminal service	✓
Windows Firewall	✓
MSN Explorer	-
Outlook Express	-
Administrative Tools	✓
Remote Desktop	✓
Remote Assistance	-
.NET Framework	-
ASP.NET	-
OpenGL support	✓
Local network bridge	✓

Table 224: Device functions in Windows Embedded Standard 2009

Function	Present
Codepages / User locales / Keyboards	✓
Disk Management Service	✓
Windows Installer Service	✓
Class Installer	✓
CoDevice Installer	✓
Media Player 6.4	✓
DirectX 9.0c	✓
Accessories	✓
Number of fonts	89

Table 224: Device functions in Windows Embedded Standard 2009

6.5 Installation

Upon request, B&R can preinstall Windows Embedded Standard 2009 on a suitable CFast card (at least 2 GB necessary). The system is then automatically configured when it is switched on for the first time. This procedure takes approximately 10 minutes, with the device being rebooted a number of times.

6.6 Drivers

All drivers required for operation are preinstalled along with the operating system. If an older version of the driver is still being used, the latest version can be downloaded and installed from the B&R website (www.br-automation.com). It is important that Enhanced Write Filter (EWF) is disabled for this.

7 Automation Runtime

7.1 General information

An integral component of Automation Studio is the real-time operating system, which makes up the software kernel that allows applications to run on a target system.

- Guaranteed highest possible performance for the hardware being used
- Runs on all B&R target systems
- Makes the application hardware-independent
- Easy portability of applications between B&R target systems
- Deterministic behavior guaranteed by cyclic runtime system
- Multitasking according to deterministic runtime rules
- Configuration of priorities, time classes and jitter tolerance
- Up to eight different time classes with any number of subroutines
- Guaranteed response to time and jitter tolerance violations
- Exception handling
- Configurable jitter tolerance in all task classes
- Support for all relevant programming languages, including IEC 61131-3 and ANSI C
- Extensive function library conforming to IEC 61131-3 as well as the expanded Automation library
- Access to all networks and bus systems via function calls or the Automation Studio configuration

B&R Automation Runtime is fully embedded in the corresponding target system (the hardware where Automation Runtime is installed). It allows application programs to access I/O systems (e.g. via fieldbus) and other devices (interfaces, networks, etc.).

7.2 Order data

Model number	Short description	Figure
	Automation Runtime	
1A4600.10-5	B&R Automation Runtime ARwin, including license sticker	
1A4601.06-5	B&R Automation Runtime ARemb, including license sticker	

Table 225: 1A4600.10-5, 1A4601.06-5 - Order data

7.3 Automation Runtime Windows (ARwin)

System support is provided by ARwin with an AS 4.0.17.85 / AR H4.06 upgrade. An Automation Runtime dongle is not necessary; all that is needed is an AR license. ARwin support is currently only available for PPC900 single-touch display units.

Information:

In order to use Automation Runtime Windows (ARwin), the BIOS setting *Advanced - OEM features - Realtime environment* must be set to *Enabled*.

Information:

Beginning with ARwin 4.06, ADI access is no longer possible from Windows and ARwin at the same time since the ADI interface is blocked by ARwin.

7.4 Automation Runtime Embedded (ARemb)

System support is provided by ARemb with an AS 4.0.17.85 / AR H4.06 upgrade. An Automation Runtime dongle is not necessary; all that is needed is an AR license. ARemb support is currently only available for PPC900 single-touch display units.

Visual Components Runtime is supported beginning with V4.05.5.

Information:

In order to use Automation Runtime Embedded (ARemb), the BIOS setting *Advanced - OEM features - Realtime environment* must be set to *Enabled*.

Chapter 5 • Standards and certifications

1 Standards and guidelines

1.1 CE mark

This mark certifies that all harmonized EN standards for the applicable directives have been met for B&R products.

1.2 EMC directive

These devices meet the requirements of EC directive "2004/108/EC Electromagnetic compatibility" and are designed for the following areas:

EN 61131-2:2007	Programmable logic controllers - Part 2: Equipment requirements and tests
EN 61000-6-2:2005	Electromagnetic compatibility (EMC) - Part 6-2: Generic standards - Immunity for industrial environments
EN 61000-6 -4:2007	Electromagnetic compatibility (EMC) - Part 6-4: Generic standards - Emission standard for industrial environments

1.3 Low voltage directive

These devices satisfy the requirements of EC directive "2006/95/EC Low voltage directive" and are designed for the following areas:

EN 61131-2:2007	Programmable logic controllers - Part 2: Equipment requirements and tests
EN 60204-1:2006 + A1:2009	Safety of machinery - Electrical equipment of machines - Part 1: General requirements

2 Certifications

Danger!

A complete system can only receive certification if ALL of the individual components it includes have the applicable certifications. If an individual component is being used that DOES NOT have an applicable certification, then the complete system will NOT RECEIVE certification.

B&R products and services comply with applicable standards. This includes international standards from organizations such as ISO, IEC and CENELEC, as well as national standards from organizations such as UL, CSA, FCC, VDE, ÖVE, etc. We are committed to ensuring the reliability of our products in an industrial environment.

Unless otherwise specified, the following certifications apply:

2.1 UL certification

Products with this label have been certified by Underwriters Laboratories and are listed as "Industrial Control Equipment". This mark is valid for the USA and Canada and simplifies the certification of your machines and systems in these areas.

Underwriters Laboratories (UL) in accordance with the UL508 standard - 17th Edition
Canadian (CSA) standard in accordance with C22.2 No. 142-M1987

2.2 UL Haz. Loc. Certifications

Products with this label have been certified by Underwriters Laboratories and are listed as "Industrial Control Equipment for Use in Hazardous Locations". This mark is valid for the USA and Canada and simplifies the certification of your machines and systems in these areas.

Underwriters Laboratories (UL) in accordance with standard ANSI/ISA 12.12.01:2013
Canadian (CSA) standard in accordance with C22.2 No. 213-M1987

Ind. Cont. Eq.
for Haz.Locs.
Cl. I, Div. 2,
Groups ABCD
2P61 (T3C)

2.3 GOST-R

Products with this mark have been certified by an accredited certification body and have been approved for import to the Russian Federation.

Chapter 6 • Accessories

The following accessories have successfully completed functional testing at B&R and are approved for use with this device. Nevertheless, it is important to observe any limitations that may apply to the complete system when operated with other individual components. When operating the complete system, the specifications for the individual components must be adhered to.

All components listed in this manual have been subjected to extensive system and compatibility testing and are approved for use. B&R can make no guarantee regarding the functionality of non-approved accessories.

1 Power connectors

1.1 0TB103.9x

1.1.1 General information

The single-row 3-pin terminal block 0TB103 is used to connect the supply voltage.

1.1.2 Order data

Model number	Short description	Figure
	Terminal blocks	
0TB103.9	Connector, 24 VDC, 3-pin female, 3.31 mm² screw clamps, protected against vibration by the screw flange	
0TB103.91	Connector, 24 VDC, 3-pin female, 3.31 mm² cage clamps, protected against vibration by the screw flange	

Table 226: 0TB103.9, 0TB103.91 - Order data

1.1.3 Technical data

Information:

The following characteristics, features and limit values only apply to this accessory and can deviate from those specified for the complete system. The data specifications for the complete system take precedence over those of individual components.

Product ID	0TB103.9	0TB103.91
General information		
Certification		
CE	Yes	
cULus	Yes	
cULus HazLoc Class 1 Division 2	Yes [1]	
GL	Yes [1]	
Terminal block		
Note	Protected against vibration by the screw flange Nominal values according to UL	
Number of pins	3 (female)	
Type of terminal clamp	Screw clamps	Cage clamps [2]
Cable type	Only copper wires (no aluminum wires!)	
Distance between contacts	5.08 mm	
Connection cross section		
AWG wire	26 to 14 AWG	26 to 12 AWG
Wire end sleeves with plastic covering	0.20 to 1.50 mm²	
Solid wires	0.20 to 2.50 mm²	
Fine strand wires	0.20 to 1.50 mm²	0.20 to 2.50 mm²
With wire end sleeves	0.20 to 1.50 mm²	
Tightening torque	0.4 Nm	-

Table 227: 0TB103.9, 0TB103.91 - Technical data

Product ID	0TB103.9	0TB103.91
Electrical characteristics		
Nominal voltage	300 V	
Nominal current [3]	10 A / contact	
Contact resistance	≤5 mΩ	

Table 227: 0TB103.9, 0TB103.91 - Technical data

1) Yes, although applies only if all components installed within the complete system have this certification
2) Cage clamp terminal blocks cannot be used side-by-side.
3) The limit data for each I/O module must be taken into consideration.

1.2 0TB3103.8000

1.2.1 General information

This single row 3-pin terminal block is used to connect the supply voltage.

1.2.2 Order data

Model number	Short description	Figure
	Terminal blocks	
0TB3103.8000	Connector, 230 VAC, 3-pin female, 4 mm² screw clamp, protected against vibration by the screw flange	

Table 228: 0TB3103.8000 - Order data

1.2.3 Technical data

Product ID	0TB3103.8000
General information	
Certification	
CE	Yes
cULus	Yes
cULus HazLoc Class 1 Division 2	Yes [1]
Terminal block	
Note	Protected against vibration by the screw flange
Number of pins	3 (male)
Type of terminal clamp	Screw clamps
Distance between contacts	7.62 mm
Connection cross section	
AWG wire	24 to 10 AWG
Wire end sleeves with plastic covering	0.25 to 4 mm²
Flexible	0.2 to 4 mm²
Inflexible	0.2 to 4 mm²
Tightening torque	Min. 0.5 Nm / max. 0.6 Nm
Electrical characteristics	
Nominal voltage	400 V
Nominal current	20 A

Table 229: 0TB3103.8000 - Technical data

1) Yes, although applies only if all components installed within the complete system have this certification

2 Replacement CMOS batteries

2.1 0AC201.91 / 4A0006.00-000

2.1.1 General information

This lithium battery is needed to back BIOS CMOS data and the real-time clock (RTC).

The battery is subject to wear and must be replaced when the battery power is insufficient ("Bad" status).

2.1.2 Order data

Model number	Short description	Figure
	Batteries	
0AC201.91	Lithium batteries 4 pcs., 3 V / 950 mAh button cell We hereby state that the lithium cells contained in this shipment qualify as "partly regulated". Handle with care. If the package is damaged, inspect the cells, repack intact cells and protect the cells against short circuit. For emergency information, call RENATA SA at +41 61 319 28 27.	
4A0006.00-000	Lithium battery, 3 V / 950 mAh, button cell	

Table 230: 0AC201.91, 4A0006.00-000 - Order data

2.1.3 Technical data

Warning!

The battery must be replaced by a Type CR2477N Renata battery only. The use of another battery may present a risk of fire or explosion.

The battery may explode if handled improperly. Do not recharge, disassemble or dispose of in fire.

Information:

The following characteristics, features and limit values only apply to this accessory and can deviate from those specified for the complete system. The data specifications for the complete system take precedence over those of individual components.

Product ID	0AC201.91	4A0006.00-000
General information		
Storage time	Max. 3 years at 30°C	
Certification		
CE	Yes	
cULus	Yes	
Electrical characteristics		
Capacity	950 mAh	
Self-discharging	<1% per year (at 23°C)	
Voltage range	3 V	
Environmental conditions		
Temperature		
Storage	-20 to 60°C	
Relative humidity		
Operation	0 to 95%	
Storage	0 to 95%	
Transport	0 to 95%	

Table 231: 0AC201.91, 4A0006.00-000 - Technical data

3 CFast cards

3.1 5CFAST.xxxx-00

3.1.1 General information

CFast cards are based on SLC (single-level cell) technology and are SATA 2.6 compatible. Their dimensions are identical to CompactFlash cards.

3.1.2 Order data

Model number	Short description	Figure
	CFast cards	
5CFAST.2048-00	CFast card, 2 GB	
5CFAST.4096-00	CFast card, 4 GB	
5CFAST.8192-00	CFast card, 8 GB	
5CFAST.016G-00	CFast card, 16 GB	
5CFAST.032G-00	CFast card, 32 GB	

Table 232: 5CFAST.2048-00, 5CFAST.4096-00, 5CFAST.8192-00, 5CFAST.016G-00, 5CFAST.032G-00 - Order data

3.1.3 Technical data

Information:

Due to the changeover to the new controller, revision E0 may not be image-compatible to previous revisions when using older cloning tools. This is not the case when using current cloning tools.

Information:

The following characteristics, features and limit values only apply to this accessory and can deviate from those specified for the complete system. The data specifications for the complete system take precedence over those of individual components.

Product ID	5CFAST.2048-00 ≥ Rev. E0	5CFAST.4096-00 ≥ Rev. E0	5CFAST.8192-00 ≥ Rev. E0	5CFAST.016G-00 ≥ Rev. E0	5CFAST.032G-00 ≥ Rev. E0
General information					
Capacity	2 GB	4 GB	8 GB	16 GB	32 GB
Data retention	10 years				
Data reliability	<1 unrecoverable error in 10^{14} bit read accesses				
Lifetime monitoring	Yes				
MTBF	>2,500,000 hours (at 25°C)				
Maintenance	None				
Supported operating modes	SATA 2.6, max. PIO Mode 4, Multiword DMA Mode 2, Ultra DMA Mode 6				
Sequential read					
Typical					
With 128 kB block size	94 MB/s	108 MB/s	108 MB/s	108 MB/s	116 MB/s
With 4 kB block size	42 MB/s	46 MB/s	46 MB/s	46 MB/s	46 MB/s
Maximum					
With 128 kB block size	100 MB/s	115 MB/s	115 MB/s	115 MB/s	120 MB/s
With 4 kB block size	50 MB/s				
Sequential write					
Typical					
With 128 kB block size	57 MB/s	86 MB/s	86 MB/s	86 MB/s	111 MB/s
With 4 kB block size	36 MB/s	40 MB/s	40 MB/s	40 MB/s	40 MB/s
Maximum					
With 128 kB block size	65 MB/s	95 MB/s	95 MB/s	95 MB/s	120 MB/s
With 4 kB block size	40 MB/s	45 MB/s	45 MB/s	45 MB/s	45 MB/s

Table 233: 5CFAST.2048-00, 5CFAST.4096-00, 5CFAST.8192-00, 5CFAST.016G-00, 5CFAST.032G-00 - Technical data

Product ID	5CFAST.2048-00 ≥ Rev. E0	5CFAST.4096-00 ≥ Rev. E0	5CFAST.8192-00 ≥ Rev. E0	5CFAST.016G-00 ≥ Rev. E0	5CFAST.032G-00 ≥ Rev. E0
Certification					
CE			Yes		
cULus			Yes		
cULus HazLoc Class 1 Division 2			Yes[1)]		
GOST-R			Yes		
GL			Yes[1)]		
Endurance					
SLC flash			Yes		
Wear leveling			Static		
S.M.A.R.T. support			Yes		
Support					
Hardware			APC910, PPC900		
Operating systems					
Windows 7 32-bit	No	No	No	Yes	Yes
Windows 7 64-bit	No	No	No	No	Yes
Windows Embedded Standard 7 32-bit	No	No	No	Yes	Yes
Windows Embedded Standard 7 64-bit	No	No	No	Yes	Yes
Windows XP Professional	No	Yes	Yes	Yes	Yes
Windows Embedded Standard 2009			Yes		
Software					
PVI Transfer			≥ V4.0.0.8 (part of PVI Development Setup ≥ V3.0.2.3014)		
B&R Embedded OS Installer	≥V3.10	≥V3.10	≥V3.10	≥V3.20	≥V3.21
Environmental conditions					
Temperature					
Operation			-40 to 85°C		
Storage			-50 to 100°C		
Transport			-50 to 100°C		
Relative humidity					
Operation			Max. 85% at 85°C		
Storage			Max. 85% at 85°C		
Transport			Max. 85% at 85°C		
Vibration					
Operation			20 g peak, 10 to 2000 Hz		
Storage			20 g peak, 10 to 2000 Hz		
Transport			20 g peak, 10 to 2000 Hz		
Shock					
Operation			1.5 kg peak, 0.5 ms		
Storage			1.5 kg peak, 0.5 ms		
Transport			1.5 kg peak, 0.5 ms		
Altitude					
Operation			TBD		
Mechanical characteristics					
Dimensions					
Width			42.8 ±0.10 mm		
Length			36.4 ±0.10 mm		
Depth			3.6 ±0.10 mm		
Weight			10 g		

Table 233: 5CFAST.2048-00, 5CFAST.4096-00, 5CFAST.8192-00, 5CFAST.016G-00, 5CFAST.032G-00 - Technical data

1) Yes, although applies only if all components installed within the complete system have this certification

Product ID	5CFAST.2048-00 ≤ Rev. D0	5CFAST.4096-00 ≤ Rev. D0	5CFAST.8192-00 ≤ Rev. D0	5CFAST.016G-00 ≤ Rev. D0	5CFAST.032G-00 ≤ Rev. D0
General information					
Capacity	2 GB	4 GB	8 GB	16 GB	32 GB
Data retention	10 years				
Data reliability	<1 unrecoverable error in 10^{14} bit read accesses				
Lifetime monitoring	Yes				
MTBF	>2,500,000 hours (at 25°C)				
Maintenance	None				
Supported operating modes	SATA 2.6, max. PIO Mode 4, Multiword DMA Mode 2, Ultra DMA Mode 6				
Sequential read					
Typical					
With 128 kB block size	56 MB/s	107 MB/s	116 MB/s	116 MB/s	116 MB/s
With 4 kB block size	23 MB/s	26 MB/s	29 MB/s	29 MB/s	29 MB/s
Maximum					
With 128 kB block size	60 MB/s	110 MB/s	120 MB/s	120 MB/s	120 MB/s
With 4 kB block size	25 MB/s	30 MB/s	35 MB/s	35 MB/s	35 MB/s
Sequential write					
Typical					
With 128 kB block size	24 MB/s	49 MB/s	93 MB/s	93 MB/s	93 MB/s
With 4 kB block size	17 MB/s	19 MB/s	21 MB/s	21 MB/s	21 MB/s
Maximum					
With 128 kB block size	30 MB/s	55 MB/s	100 MB/s	100 MB/s	100 MB/s
With 4 kB block size	20 MB/s	25 MB/s	25 MB/s	25 MB/s	25 MB/s
Certification					
CE	Yes				
cULus	Yes				
cULus HazLoc Class 1 Division 2	Yes[1)]				
GOST-R	Yes				
GL	Yes[1)]				
Endurance					
SLC flash	Yes				
Wear leveling	Static				
S.M.A.R.T. support	Yes				
Support					
Hardware	APC910, PPC900				
Operating systems					
Windows 7 32-bit	No	No	No	Yes	Yes
Windows 7 64-bit	No	No	No	No	Yes
Windows Embedded Standard 7 32-bit	No	No	No	Yes	Yes
Windows Embedded Standard 7 64-bit	No	No	No	Yes	Yes
Windows XP Professional	No	Yes	Yes	Yes	Yes
Windows Embedded Standard 2009	Yes				
Software					
PVI Transfer	≥ V4.0.0.8 (part of PVI Development Setup ≥ V3.0.2.3014)				
B&R Embedded OS Installer	≥V3.10	≥V3.10	≥V3.10	≥V3.20	≥V3.21
Environmental conditions					
Temperature					
Operation	0 to 70°C				
Storage	-50 to 100°C				
Transport	-50 to 100°C				
Relative humidity					
Operation	Max. 85% at 70°C				
Storage	Max. 85% at 70°C				
Transport	Max. 85% at 70°C				
Vibration					
Operation	20 g peak, 10 to 2000 Hz				
Storage	20 g peak, 10 to 2000 Hz				
Transport	20 g peak, 10 to 2000 Hz				
Shock					
Operation	1.5 kg peak, 0.5 ms				
Storage	1.5 kg peak, 0.5 ms				
Transport	1.5 kg peak, 0.5 ms				
Altitude					
Operation	TBD				
Mechanical characteristics					
Dimensions					
Width	42.8 ±0.10 mm				
Length	36.4 ±0.10 mm				
Depth	3.6 ±0.10 mm				
Weight	10 g				

Table 234: 5CFAST.2048-00, 5CFAST.4096-00, 5CFAST.8192-00, 5CFAST.016G-00, 5CFAST.032G-00 - Technical data

1) Yes, although applies only if all components installed within the complete system have this certification

3.1.4 Dimensions

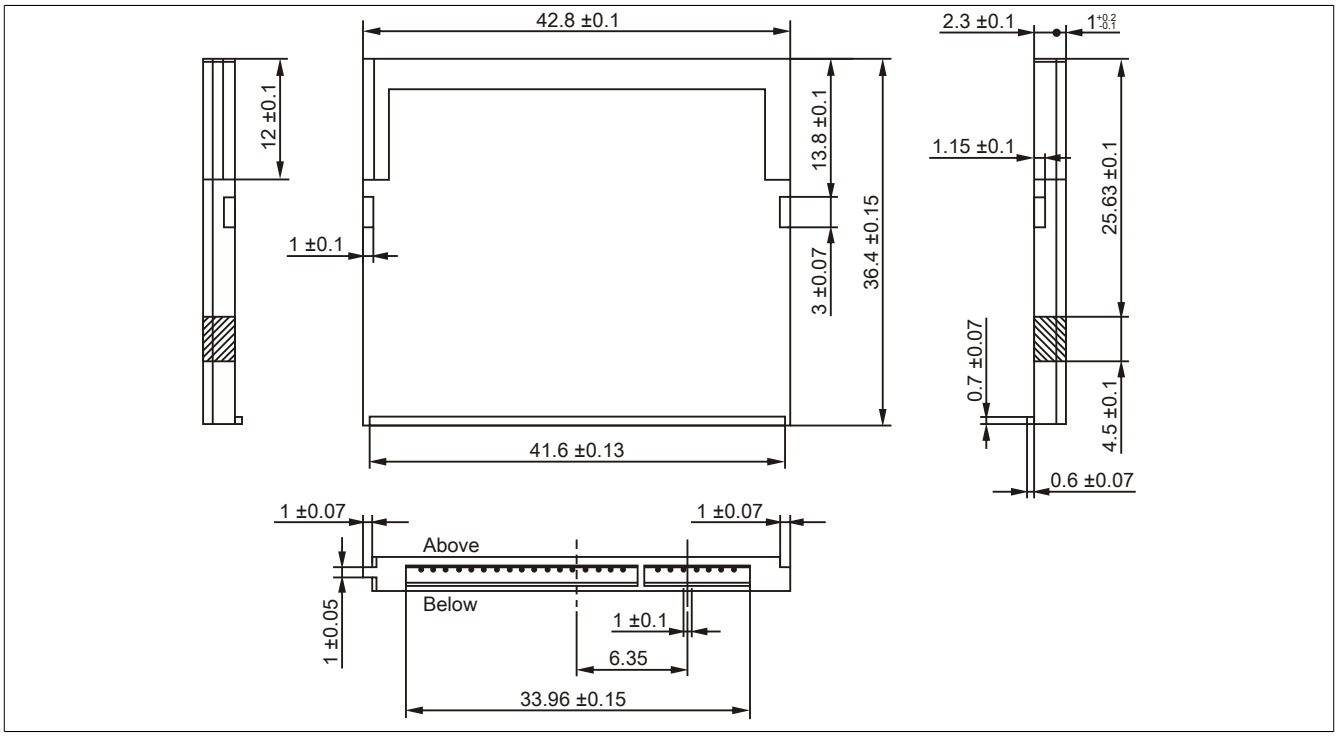

Figure 172: CFast card - Dimensions

3.1.5 Temperature humidity diagram

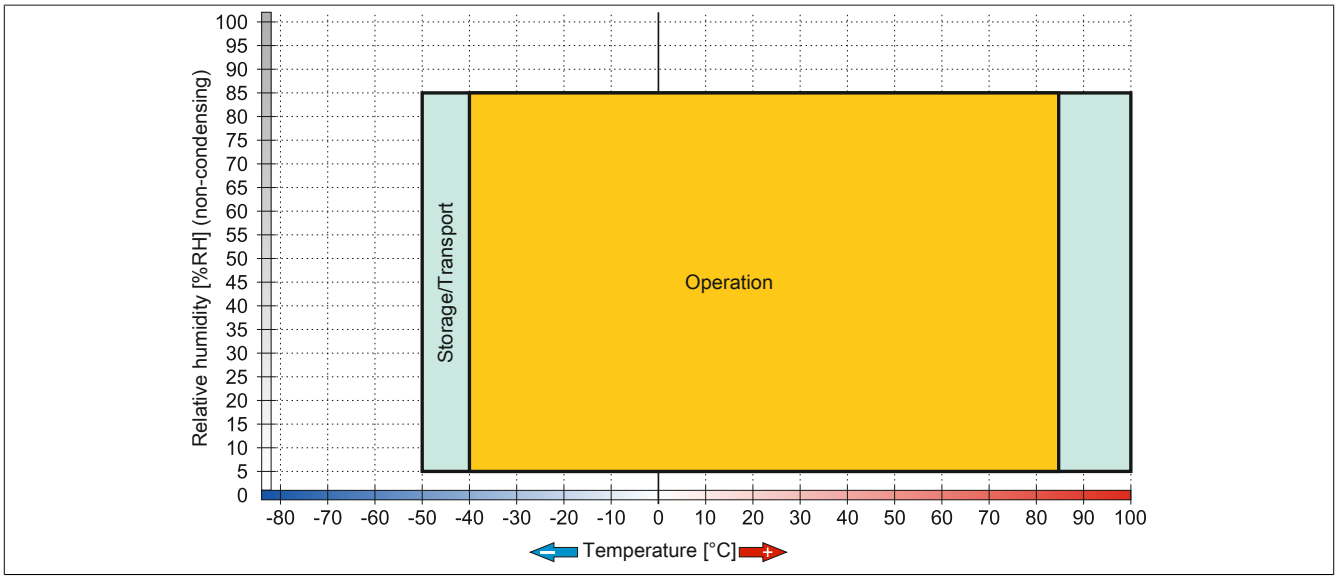

Figure 173: 5CFAST.xxxx-00 ≥ Rev. E0 - Temperature/Humidity diagram

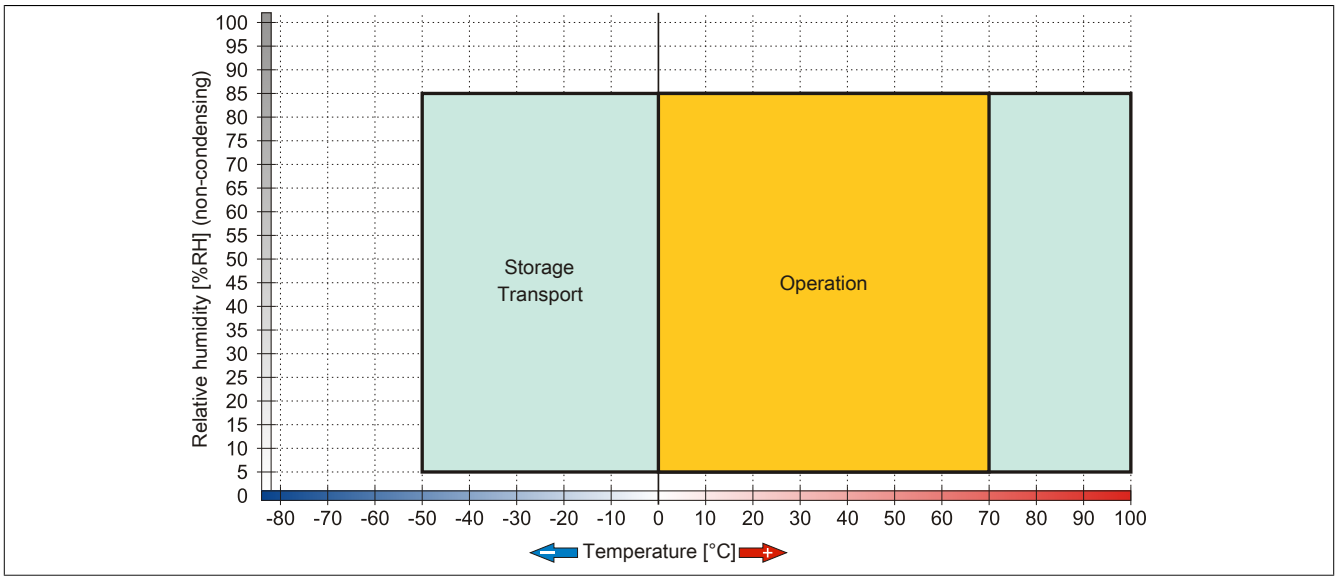

Figure 174: 5CFAST.xxxx-00 ≤ Rev. D0 - Temperature/Humidity diagram

4 USB flash drives

4.1 5MMUSB.xxxx-01

4.1.1 General information

USB flash drives are storage media that are easy to replace. Because of their fast data transfer (USB 2.0), USB flash drives are ideal for use as portable data storage. Without requiring additional drivers ("hot plugging", except in the case of Windows 98SE), the USB flash drive can immediately act as an additional drive where data can be read or written.

Information:

Due to the vast quantity of USB flash drives available on the market as well as their short product life cycle, we reserve the right to supply alternative products at any time. The following measures may therefore be necessary in order to boot from these flash drives as well:

- **The flash drive must be reformatted or in some cases even repartitioned (set active partition).**
- **The flash drive must be the first bootable device in the BIOS boot order; alternatively, the IDE controllers can be disabled in BIOS. This can be avoided in most cases if the "fdisk /mbr" command is additionally executed on the USB flash drive.**

4.1.2 Order data

Model number	Short description	Figure
	USB accessories	
5MMUSB.2048-01	USB 2.0 flash drive, 2048 MB, B&R	
5MMUSB.4096-01	USB 2.0 flash drive, 4096 MB, B&R	

Table 235: 5MMUSB.2048-01, 5MMUSB.4096-01 - Order data

4.1.3 Technical data

Product ID	5MMUSB.2048-01	5MMUSB.4096-01
General information		
Capacity	2 GB	4 GB
LEDs	1 LED (green) [1]	
MTBF	>3,000,000 hours	
Type	USB 1.1, USB 2.0	
Maintenance	None	
Default file system	FAT16	FAT32
Certification		
CE	Yes	
GOST-R	Yes	
Interfaces		
USB		
Type	USB 1.1, USB 2.0	
Connection	To any USB type A interface	
Transfer rate	Low speed (1.5 Mbit/s), full speed (12 Mbit/s), high speed (480 Mbit/s)	
Sequential reading	Full speed max. 1 MB/s, High speed max. 32 MB/s	
Sequential writing	Full speed max. 0.9 MB/s, High speed max. 23 MB/s	
Endurance		
SLC flash	Yes	
Data retention	>10 years	
Data reliability	<1 unrecoverable error in 10^{14} bit read accesses	
Connection cycles	>1500	
Support		
Operating systems		
Windows 7	Yes	
Windows XP Professional	Yes	
Windows XP Embedded	Yes	
Windows ME	Yes	
Windows 2000	Yes	
Windows CE 5.0	Yes	
Windows CE 4.2	Yes	

Table 236: 5MMUSB.2048-01, 5MMUSB.4096-01 - Technical data

Product ID	5MMUSB.2048-01	5MMUSB.4096-01
Electrical characteristics		
Power consumption	Max. 500 µA sleep mode, max. 120 mA read/write	
Environmental conditions		
Temperature		
Operation	0 to 70°C	
Storage	-50 to 100°C	
Transport	-50 to 100°C	
Relative humidity		
Operation	85%, non-condensing	
Storage	85%, non-condensing	
Transport	85%, non-condensing	
Vibration		
Operation	20 to 2000 Hz: 20 g (peak)	
Storage	20 to 2000 Hz: 20 g (peak)	
Transport	20 to 2000 Hz: 20 g (peak)	
Shock		
Operation	Max. 1500 g (peak)	
Storage	Max. 1500 g (peak)	
Transport	Max. 1500 g (peak)	
Altitude		
Operation	Max. 3048 m	
Storage	Max. 12192 m	
Transport	Max. 12192 m	
Mechanical characteristics		
Dimensions		
Width	17.97 mm	
Length	67.85 mm	
Height	8.35 mm	

Table 236: 5MMUSB.2048-01, 5MMUSB.4096-01 - Technical data

1) Indicates data being transferred (sending and receiving).

4.1.4 Temperature/Humidity diagram

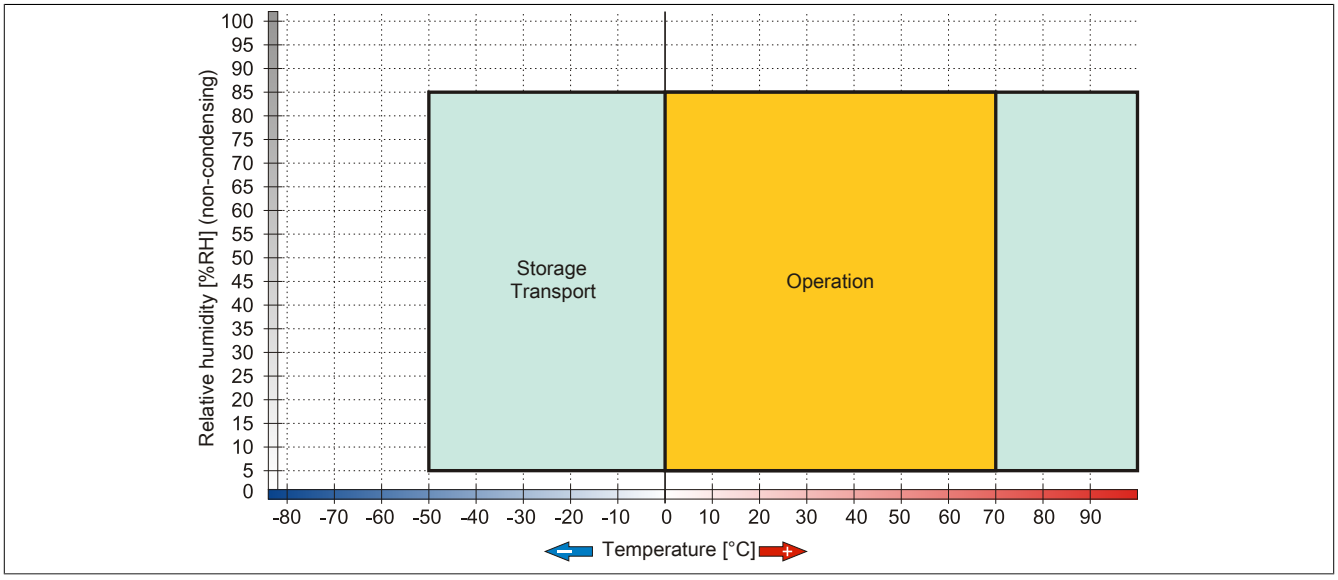

Figure 175: 5MMUSB.xxxx-01 - Temperature/Humidity diagram

5 Cables

5.1 DVI cable

5.1.1 5CADVI.0xxx-00

5.1.1.1 General information

The DVI cable 5CADVI.0xxx-00 is designed for a fixed layout.

> **Caution!**
>
> **Power must be turned off before plugging in and unplugging cables.**

5.1.1.2 Order data

Model number	Short description	Figure
	DVI cables	
5CADVI.0018-00	DVI-D cable, 1.8 m	
5CADVI.0050-00	DVI-D cable, 5 m	
5CADVI.0100-00	DVI-D cable, 10 m	

Table 237: 5CADVI.0018-00, 5CADVI.0050-00, 5CADVI.0100-00 - Order data

5.1.1.3 Technical data

Product ID	5CADVI.0018-00	5CADVI.0050-00	5CADVI.0100-00
General information			
Certification			
CE	Yes		
cULus	Yes		
GOST-R	Yes		
GL	Yes [1]		
Cable structure			
Wire cross section	AWG 28		
Shield	Individual cable pairs and entire cable		
Complete shielding	Tinned copper braiding, optical coverage >86%		
Outer sheathing			
Material	PVC		
Color	Beige		
Labeling	AWM STYLE 20276 80°C 30V VW1 DVI DIGITAL SINGLE LINK DER AN		
Connector			
Type	2x DVI-D (18+1), male		
Connection cycles	100		
Locating screw tightening torque	Max. 0.5 Nm		
Electrical characteristics			
Conductor resistance	Max. 237 Ω/km		
Insulation resistance	Min. 100 MΩ/km		
Mechanical characteristics			
Dimensions			
Length	1.8 m ±50 mm	5 m ±80 mm	10 m ±100 mm
Diameter	Max. 8.5 mm		
Flex radius	≥5x cable diameter (male connector - ferrite bead and ferrite bead - ferrite bead)		
Weight	Approx. 260 g	Approx. 460 g	Approx. 790 g

Table 238: 5CADVI.0018-00, 5CADVI.0050-00, 5CADVI.0100-00 - Technical data

1) Yes, although applies only if all components installed within the complete system have this certification

5.1.1.4 Flex radius specifications

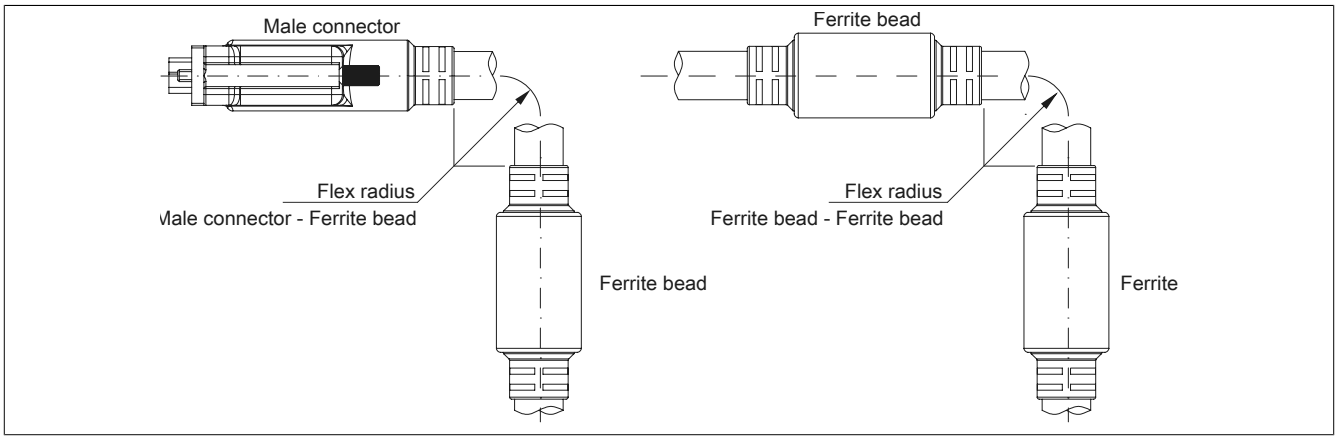

Figure 176: Flex radius specifications

5.1.1.5 Dimensions

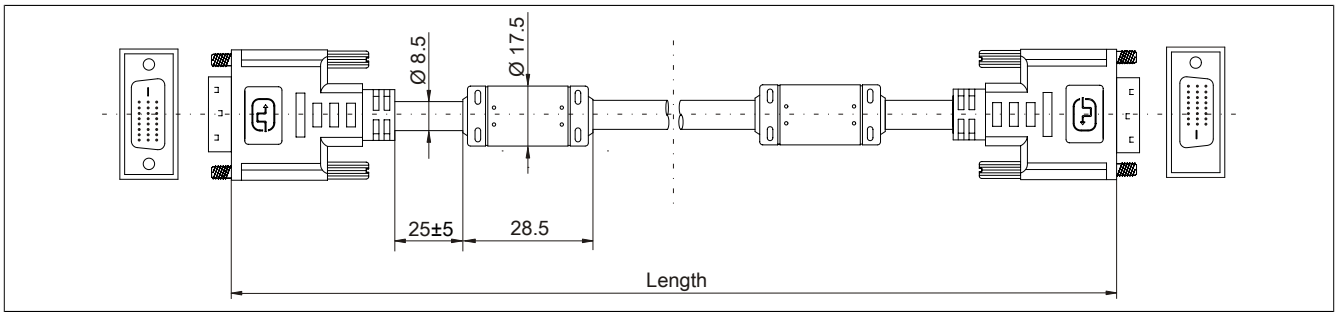

Figure 177: 5CADVI.0xxx-00 - Dimensions

5.1.1.6 Cable pinout

Warning!

If you choose to make a suitable cable yourself, it should be wired according to these specifications.

If a self-made cable is used, B&R cannot guarantee that it will function properly. All cables provided by B&R are guaranteed to function properly, however.

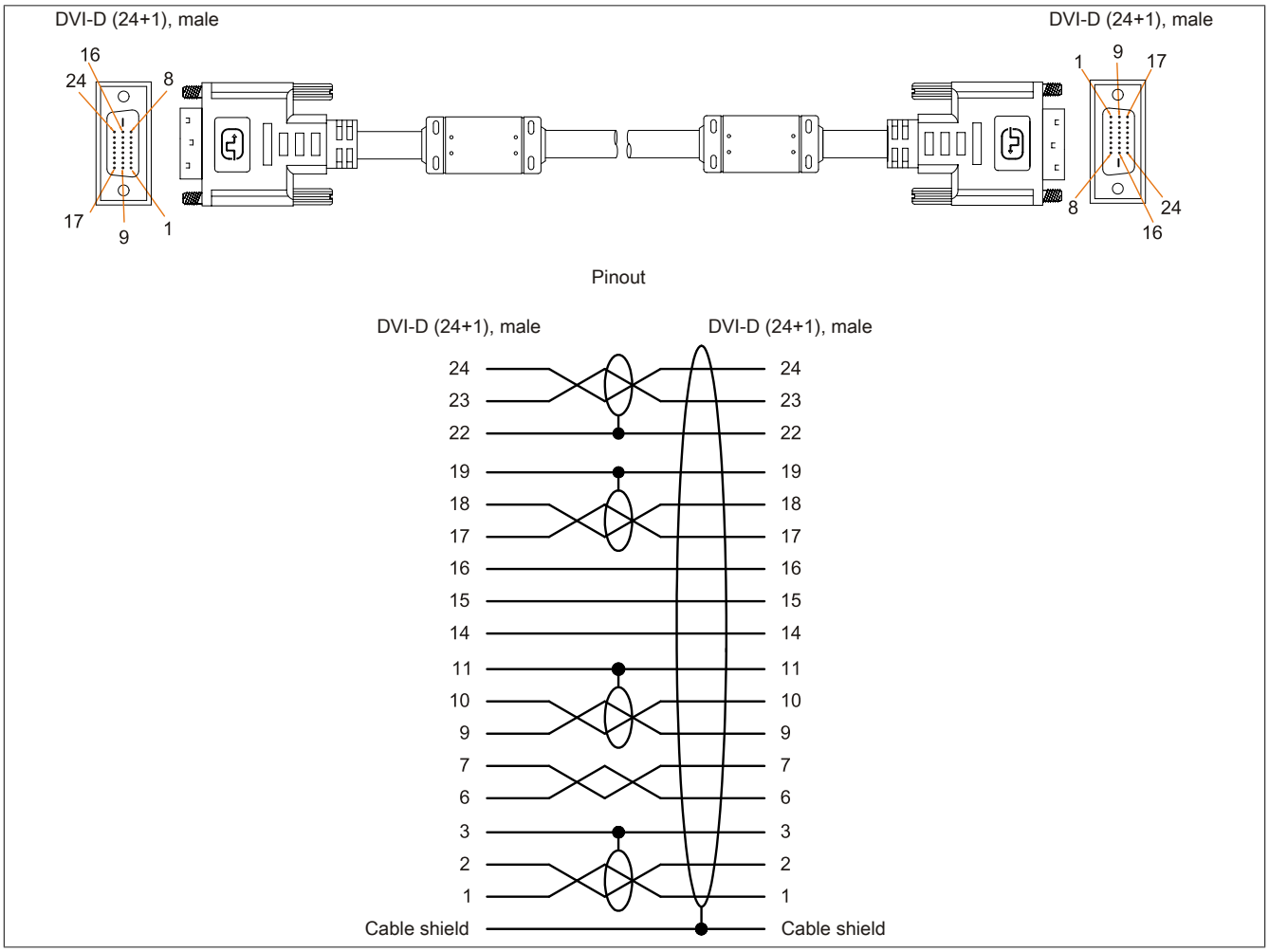

Figure 178: 5CADVI.0xxx-00 - Pinout

5.2 SDL cable

5.2.1 5CASDL.0xxx-00

5.2.1.1 General information

The SDI cable 5CASDL.0xxx-00 is designed for a fixed layout. SDL flex cables 5CASDL.0xxx-03 are required for flexible applications (e.g. swing arm systems).

> **Caution!**
>
> **Power must be turned off before plugging in and unplugging cables.**

5.2.1.2 Order data

Model number	Short description	Figure
	SDL cables	
5CASDL.0018-00	SDL cable, 1.8 m	
5CASDL.0050-00	SDL cable, 5 m	
5CASDL.0100-00	SDL cable, 10 m	
5CASDL.0150-00	SDL cable, 15 m	
5CASDL.0200-00	SDL cable, 20 m	
5CASDL.0250-00	SDL cable, 25 m	
5CASDL.0300-00	SDL cable, 30 m	

Table 239: 5CASDL.0018-00, 5CASDL.0050-00, 5CASDL.0100-00, 5CASDL.0150-00, 5CASDL.0200-00, 5CASDL.0250-00, 5CASDL.0300-00 - Order data

5.2.1.3 Technical data

Product ID	5CASDL. 0018-00	5CASDL. 0050-00	5CASDL. 0100-00	5CASDL. 0150-00	5CASDL. 0200-00	5CASDL. 0250-00	5CASDL. 0300-00
General information							
Certification							
CE	Yes						
cULus	Yes						
GOST-R	Yes						
GL	Yes [1]						
Cable structure							
Wire cross section	AWG 28		AWG 24				
Shield	Individual cable pairs and entire cable						
Complete shielding	Tinned copper braiding, optical coverage >85%						
Outer sheathing							
Material	PVC						
Color	Black						
Labeling	E74020-C (UL) AWM STYLE 20176 80°C 30V VW-1 DVI DIGITAL LINK						
Connector							
Type	2x DVI-D (24+1), male						
Connection cycles	100						
Contacts	Gold-plated						
Mechanical protection	Metal cover with crimped stress relief						
Locating screw tightening torque	Max. 0.5 Nm						
Electrical characteristics							
Conductor resistance							
AWG 24	-		≤93 Ω/km				
AWG 28	≤237 Ω/km		-				
Insulation resistance	Min. 10 MΩ/km						
Mechanical characteristics							
Dimensions							
Length	1.8 m ±30 mm	5 m ±30 mm	10 m ±50 mm	15 m ±100 mm	20 m ±100 mm	25 m ±100 mm	30 m ±100 mm
Diameter	Typ. 8.6 ±0.2 mm Max. 9 mm		Typ. 11 ±0.2 mm Max. 11.5 mm				
Flex radius	≥5x cable diameter (male connector - ferrite bead and ferrite bead - ferrite bead)						
Flexibility	Limited flexibility; valid for ferrite bead - ferrite bead (tested 100 cycles with 5x cable diameter, 20 cycles / minute)						
Weight	Approx. 300 g	Approx. 580 g	Approx. 1500 g	Approx. 2250 g	Approx. 2880 g	Approx. 4800 g	Approx. 5520 g

Table 240: 5CASDL.0018-00, 5CASDL.0050-00, 5CASDL.0100-00, 5CASDL.0150-00, 5CASDL.0200-00, 5CASDL.0250-00, 5CASDL.0300-00 - Technical data

1) Yes, although applies only if all components installed within the complete system have this certification

5.2.1.4 Flex radius specifications

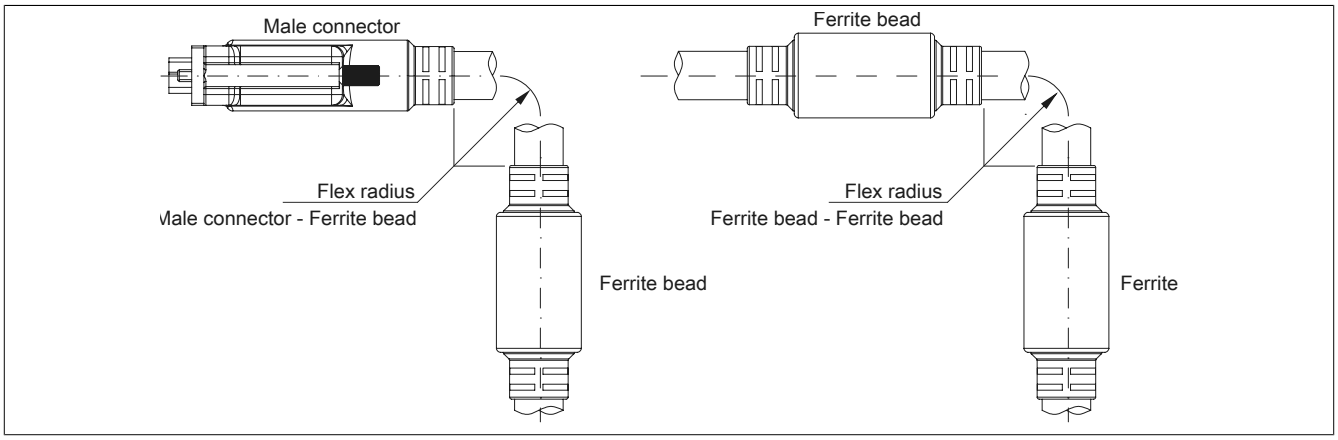

Figure 179: Flex radius specifications

5.2.1.5 Dimensions

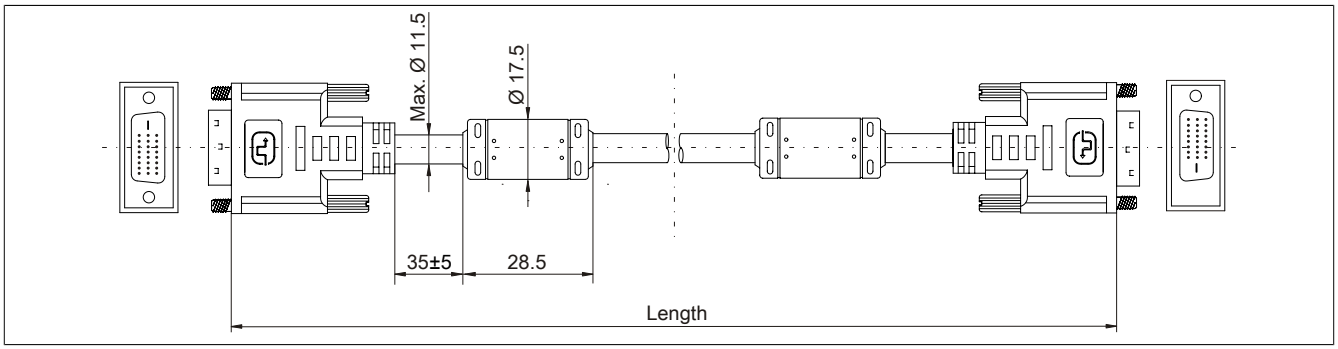

Figure 180: 5CASDL.0xxx-00 - Dimensions

5.2.1.6 Cable pinout

Warning!

If you choose to make a suitable cable yourself, it should be wired according to these specifications.

If a self-made cable is used, B&R cannot guarantee that it will function properly. All cables provided by B&R are guaranteed to function properly, however.

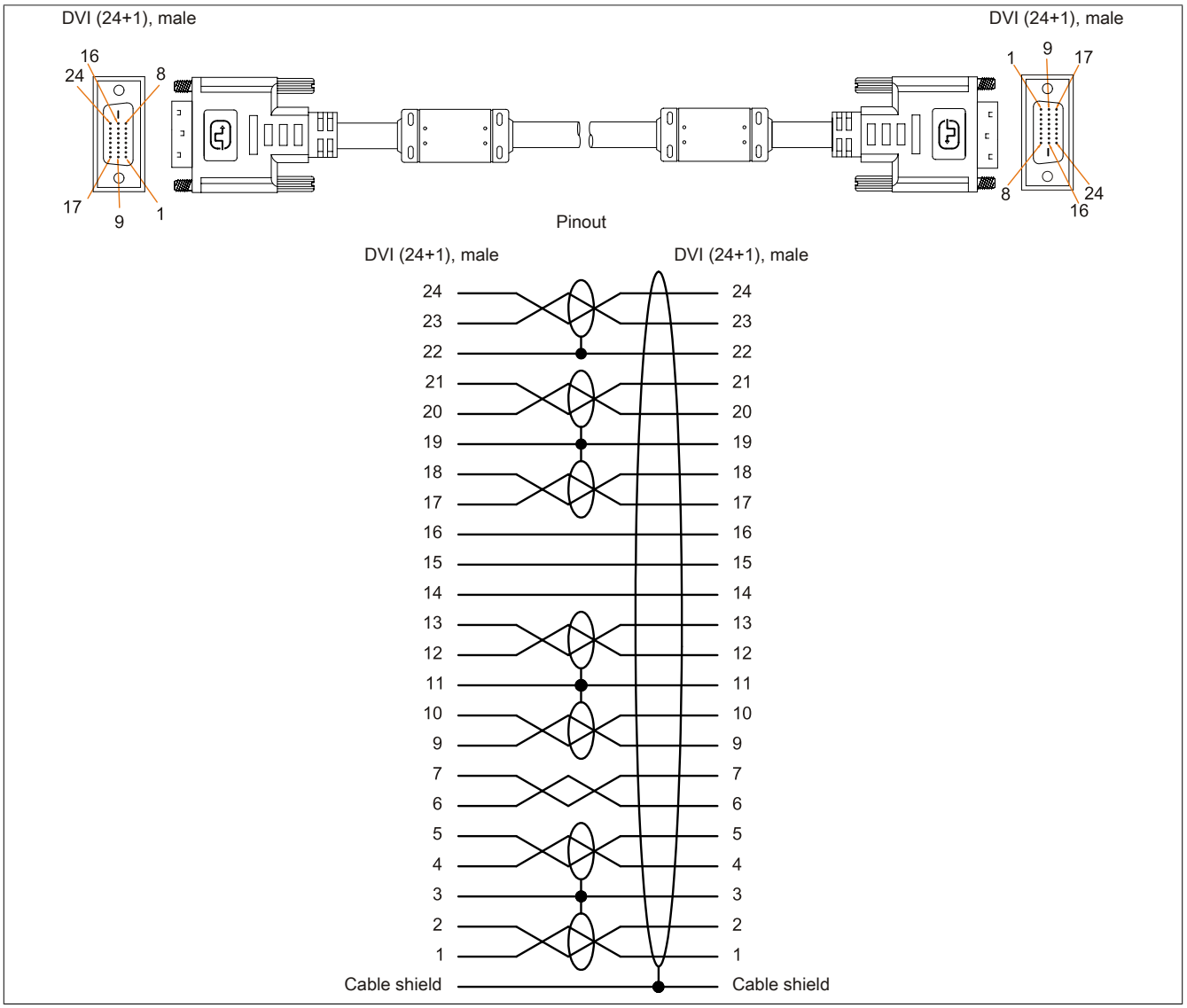

Figure 181: 5CASDL.0xxx-00 - Pinout

5.3 SDL cable with 45° male connector

5.3.1 5CASDL.0xxx-01

5.3.1.1 General information

The SDL cable with a 45° male connector 5CASDL.0xxx-01 is designed for a fixed layout.

> **Caution!**
>
> **Power must be turned off before plugging in and unplugging cables.**

5.3.1.2 Order data

Model number	Short description	Figure
	SDL cables with 45° connectors	
5CASDL.0018-01	SDL cable with 45° male connector, 1.8 m	
5CASDL.0050-01	SDL cable with 45° male connector, 5 m	
5CASDL.0100-01	SDL cable with 45° male connector, 10 m	
5CASDL.0150-01	SDL cable with 45° male connector, 15 m	

Table 241: 5CASDL.0018-01, 5CASDL.0050-01, 5CASDL.0100-01, 5CASDL.0150-01 - Order data

5.3.1.3 Technical data

Product ID	5CASDL.0018-01	5CASDL.0050-01	5CASDL.0100-01	5CASDL.0150-01
General information				
Certification				
CE	Yes			
cULus	Yes			
GOST-R	Yes			
GL	Yes [1]			
Cable structure				
Wire cross section	AWG 28		AWG 24	
Shield	Individual cable pairs and entire cable			
Complete shielding	Tinned copper braiding, optical coverage >85%			
Outer sheathing				
Material	PVC			
Color	Black			
Connector				
Type	2x DVI-D (24+1), male			
Connection cycles	100			
Contacts	Gold-plated			
Mechanical protection	Metal cover with crimped stress relief			
Locating screw tightening torque	Max. 0.5 Nm			
Electrical characteristics				
Conductor resistance				
AWG 24	-		≤93 Ω/km	
AWG 28	≤237 Ω/km		-	
Insulation resistance	Min. 10 MΩ/km			
Mechanical characteristics				
Dimensions				
Length	1.8 m ±30 mm	5 m ±50 mm	10 m ±100 mm	15 m ±100 mm
Diameter	Max. 9 mm		Max. 11.5 mm	
Flex radius				
Fixed installation	≥5x cable diameter (male connector - ferrite bead and ferrite bead - ferrite bead)			
Flexibility	Limited flexibility; valid for ferrite bead - ferrite bead (tested 100 cycles with 5x cable diameter, 20 cycles / minute)			
Weight	Approx. 300 g	Approx. 590 g	Approx. 2800 g	Approx. 2860 g

Table 242: 5CASDL.0018-01, 5CASDL.0050-01, 5CASDL.0100-01, 5CASDL.0150-01 - Technical data

1) Yes, although applies only if all components installed within the complete system have this certification

5.3.1.4 Flex radius specifications

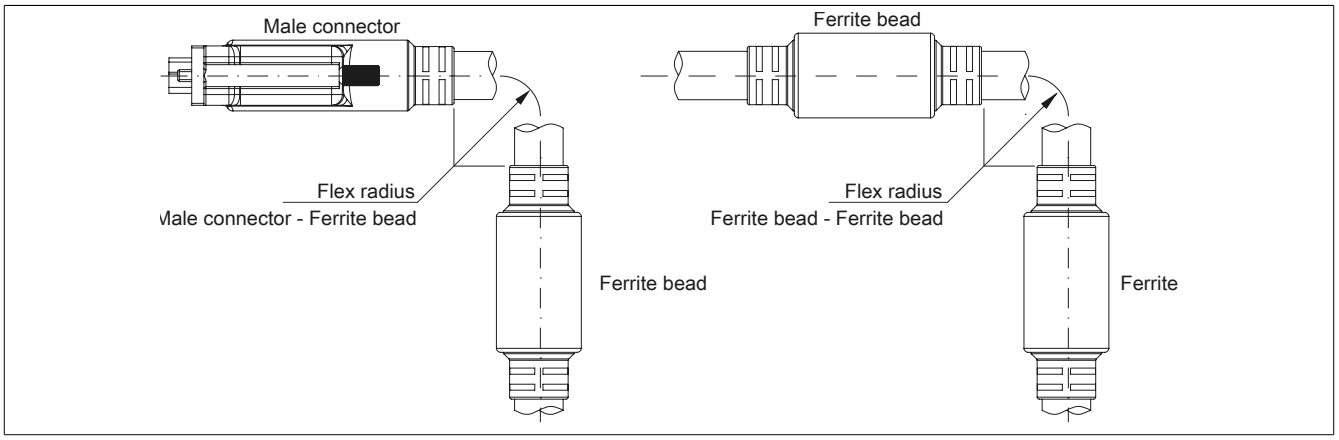

Figure 182: Flex radius specifications

5.3.1.5 Dimensions

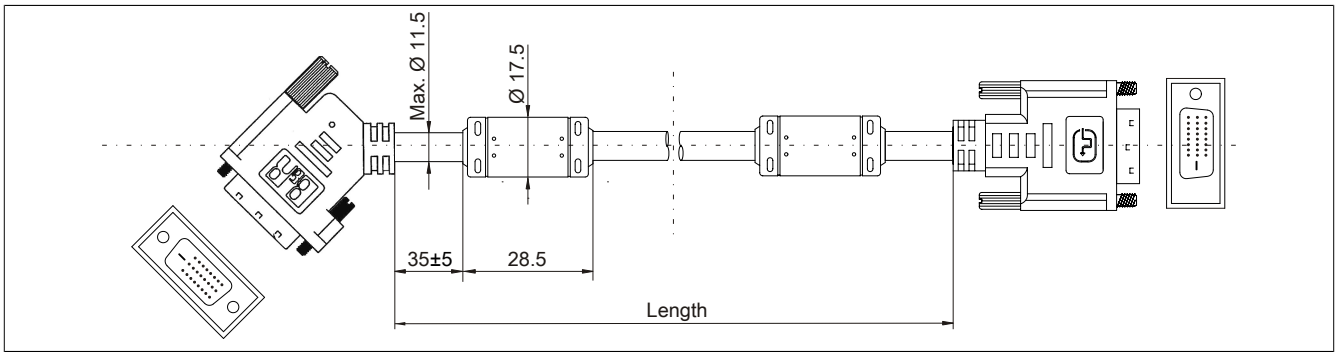

Figure 183: 5CASDL.0xxx-01 - Dimensions

5.3.1.6 Cable pinout

Warning!

If you choose to make a suitable cable yourself, it should be wired according to these specifications.

If a self-made cable is used, B&R cannot guarantee that it will function properly. All cables provided by B&R are guaranteed to function properly, however.

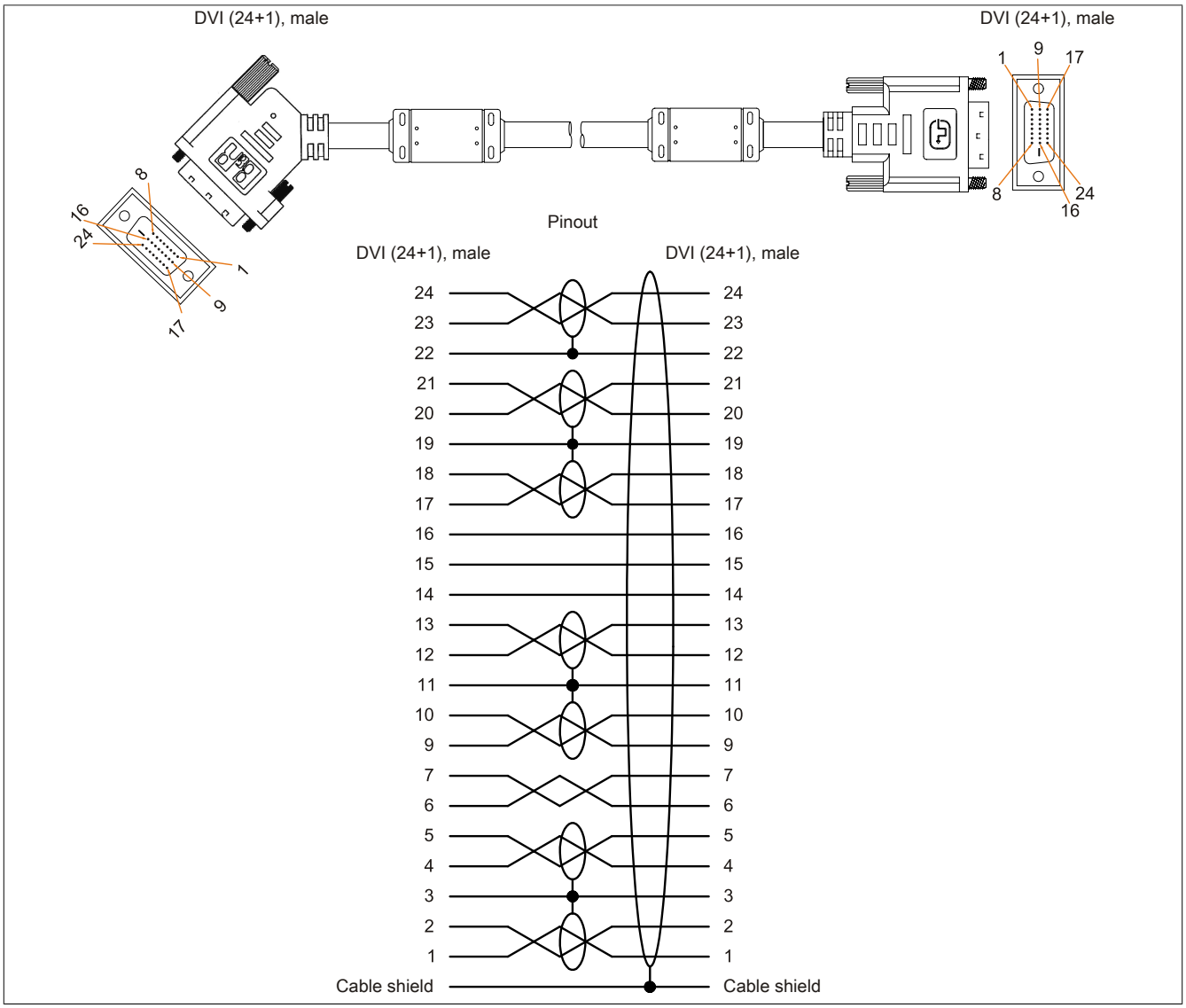

Figure 184: 5CASDL.0xxx-01 - Pinout

5.4 SDL flex cables

5.4.1 5CASDL.0xxx-03

5.4.1.1 General information

5CASDL.0xxx-03 SDL flex cables are designed for use in both inflexible and flexible applications (e.g. swing arm systems).

> **Caution!**
>
> **Power must be turned off before plugging in and unplugging cables.**

5.4.1.2 Order data

Model number	Short description	Figure
	SDL flex cables	
5CASDL.0018-03	SDL flex cable, 1.8 m	
5CASDL.0050-03	SDL flex cable, 5 m	
5CASDL.0100-03	SDL flex cable, 10 m	
5CASDL.0150-03	SDL flex cable, 15 m	
5CASDL.0200-03	SDL flex cable, 20 m	
5CASDL.0250-03	SDL flex cable, 25 m	
5CASDL.0300-03	SDL flex cable, 30 m	

Table 243: 5CASDL.0018-03, 5CASDL.0050-03, 5CASDL.0100-03, 5CASDL.0150-03, 5CASDL.0200-03, 5CASDL.0250-03, 5CASDL.0300-03 - Order data

5.4.1.3 Technical data

Product ID	5CASDL. 0018-03	5CASDL. 0050-03	5CASDL. 0100-03	5CASDL. 0150-03	5CASDL. 0200-03	5CASDL. 0250-03	5CASDL. 0300-03
General information							
Certification							
CE	Yes						
cULus	Yes						
GOST-R	Yes						
GL	Yes [1]						
Cable structure							
Wire cross section	AWG 24 (control wires) AWG 26 (DVI, USB, data)						
Properties	Silicone- and halogen-free						
Shield	Individual cable pairs and entire cable						
Complete shielding	Aluminum-clad foil + tinned copper braiding						
Outer sheathing							
Material	Special semi-glossy TMPU						
Color	Black						
Labeling	(B&R) SDL Cable (UL) AWM 20236 80°C 30V E 63216						
Connector							
Type	2x DVI-D (24+1), male						
Connection cycles	Min. 200						
Contacts	Gold-plated						
Mechanical protection	Metal cover with crimped stress relief						
Locating screw tightening torque	Max. 0.5 Nm						
Electrical characteristics							
Operating voltage	≤30 V						
Test voltage							
Wire/Wire	1 kV						
Wire/Shield	0.5 kV						
Wave impedance	100 ±10 Ω						
Conductor resistance							
AWG 24	≤95 Ω/km						
AWG 26	≤145 Ω/km						
Insulation resistance	>200 MΩ/km						
Operating conditions							
Approbation	UL AWM 20236 80°C 30 V						
Flame-resistant	In accordance with UL758 (cable vertical flame test)						
Oil and hydrolysis resistance	In accordance with VDE 0282-10						

Table 244: 5CASDL.0018-03, 5CASDL.0050-03, 5CASDL.0100-03, 5CASDL.0150-03, 5CASDL.0200-03, 5CASDL.0250-03, 5CASDL.0300-03 - Technical data

Product ID	5CASDL. 0018-03	5CASDL. 0050-03	5CASDL. 0100-03	5CASDL. 0150-03	5CASDL. 0200-03	5CASDL. 0250-03	5CASDL. 0300-03
Environmental conditions							
Temperature							
Storage	-20 to 80°C						
Fixed installation	-20 to 80°C						
Flexible installation	-5 to 60°C						
Mechanical characteristics							
Dimensions							
Length	1.8 m ±20 mm	5 m ±45 mm	10 m ±90 mm	15 m ±135 mm	20 m ±180 mm	25 m ±225 mm	30 m ±270 mm
Diameter	Max. 12 mm						
Flex radius							
Fixed installation	≥6x cable diameter (from male connector - ferrite bead) ≥10x cable diameter (from ferrite bead - ferrite bead)						
Flexible installation	≥15x cable diameter (from ferrite bead - ferrite bead)						
Flexibility	Flexible; valid for ferrite bead - ferrite bead (tested 300,000 cycles with 15x cable diameter, 4800 cycles/hour)						
Drag chain data							
Flex cycles	300,000						
Velocity	4800 cycles/hour						
Flex radius	180 mm; 15x cable diameter						
Hub	460 mm						
Weight	Approx. 460 g	Approx. 1020 g	Approx. 1940 g	Approx. 2840 g	Approx. 3740 g	Approx. 4560 g	Approx. 5590 g
Tension							
During operation	≤50 N						
During installation	≤400 N						

Table 244: 5CASDL.0018-03, 5CASDL.0050-03, 5CASDL.0100-03, 5CASDL.0150-03, 5CASDL.0200-03, 5CASDL.0250-03, 5CASDL.0300-03 - Technical data

1) Yes, although applies only if all components installed within the complete system have this certification

5.4.1.4 Flex radius specifications

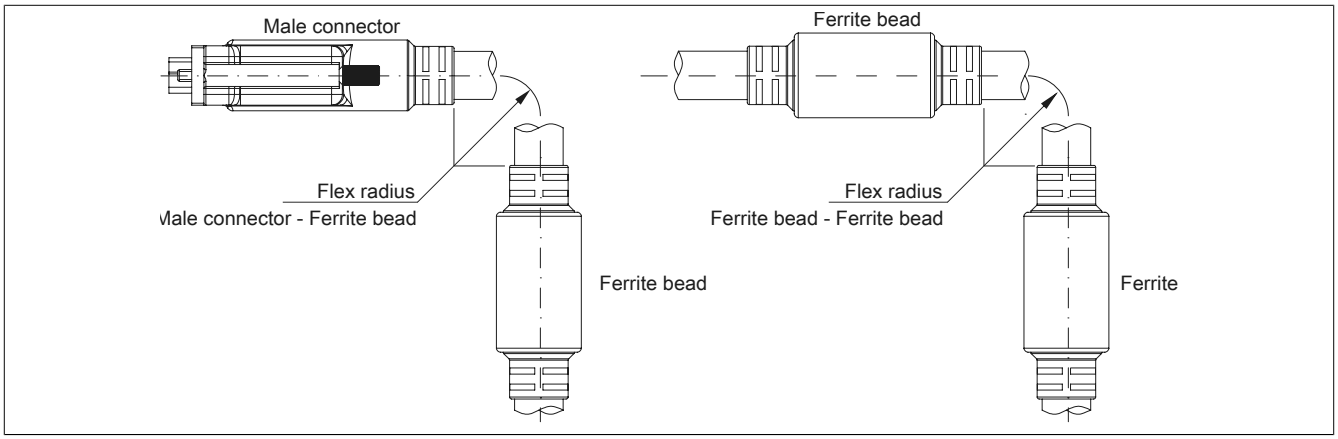

Figure 185: Flex radius specifications

5.4.1.5 Dimensions

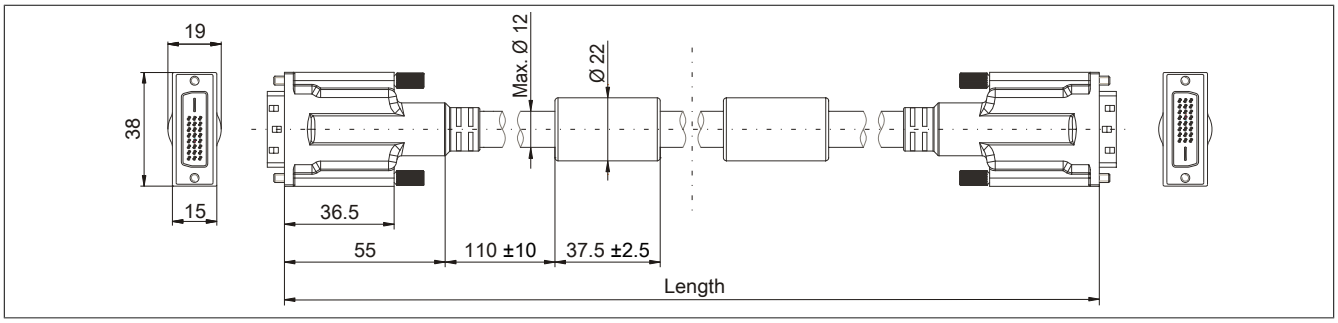

Figure 186: 5CASDL.0xxx-03 - Dimensions

5.4.1.6 Construction

Element	Assignment	Cross section
DVI	TMDS data 0	26 AWG
	TMDS data 1	26 AWG
	TMDS data 2	26 AWG
	TMDS cycle	26 AWG
USB	XUSB0	26 AWG
	XUSB1	26 AWG
Data	SDL	26 AWG
Control wires	DDC cycle	24 AWG
	DDC data	24 AWG
	+5 V	24 AWG
	Ground	24 AWG
	Hot plug detect	24 AWG

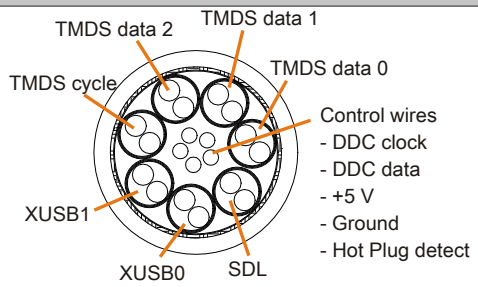

Table 245: 5CASDL.0xxx-03 SDL flex cables - Structure

5.4.1.7 Cable pinout

Warning!

If you choose to make a suitable cable yourself, it should be wired according to these specifications.

If a self-made cable is used, B&R cannot guarantee that it will function properly. All cables provided by B&R are guaranteed to function properly, however.

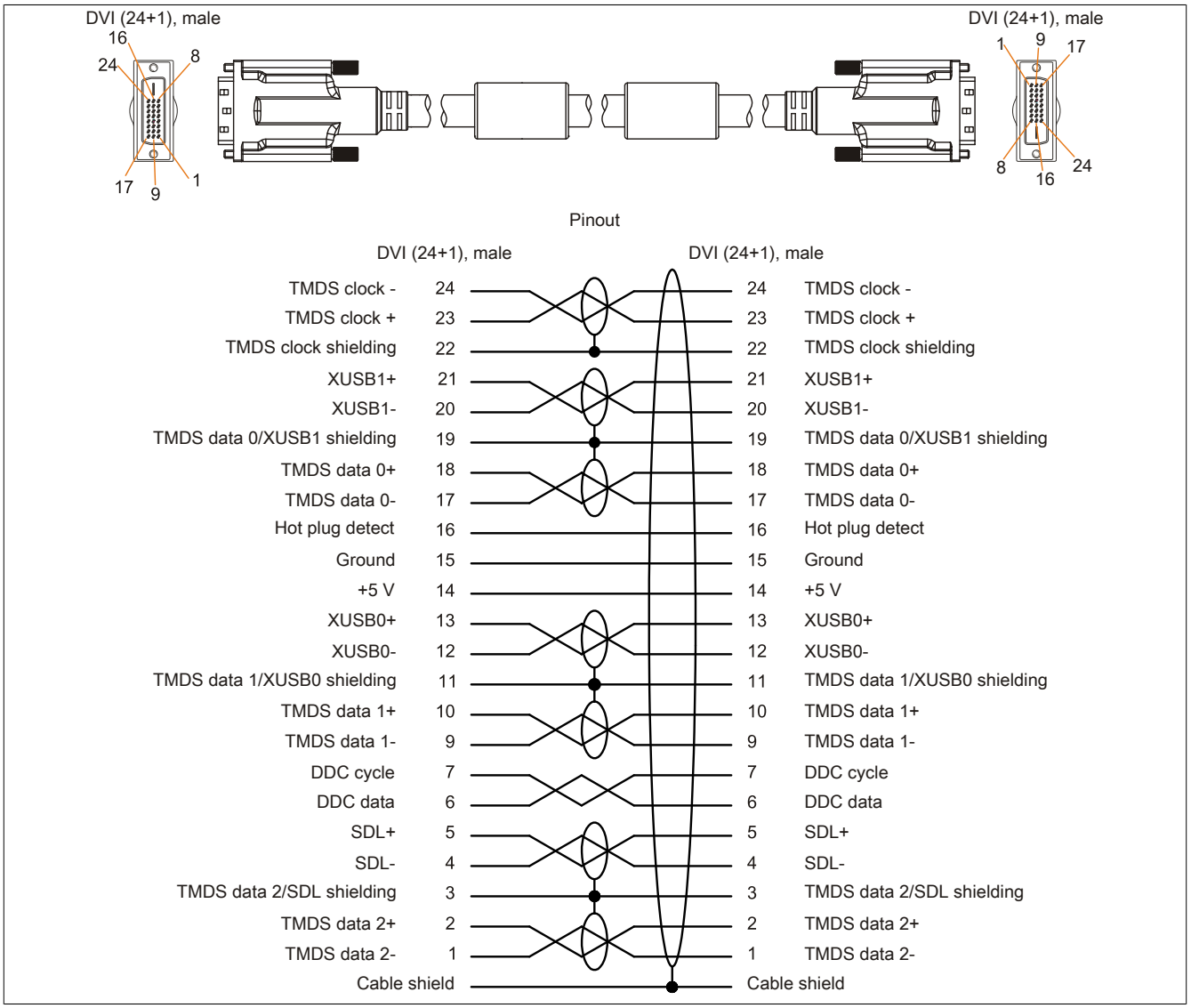

Figure 187: 5CASDL.0xxx-03 - Pinout

5.5 SDL flex cable with extender

5.5.1 5CASDL.0xx0-13

5.5.1.1 General information

5CASDL.0xx0-13 SDL flex cables with extender are designed for use in both inflexible and flexible applications (e.g. swing arm systems).

> **Caution!**
>
> **Power must be turned off before plugging in and unplugging cables.**

5.5.1.2 Order data

Model number	Short description	Figure
	SDL flex cables	
5CASDL.0300-13	SDL flex cable with extender, 30 m	
5CASDL.0400-13	SDL flex cable with extender, 40 m	
5CASDL.0430-13	SDL flex cable with extender, 43 m	

Table 246: 5CASDL.0300-13, 5CASDL.0400-13, 5CASDL.0430-13 - Order data

5.5.1.3 Technical data

Product ID	5CASDL.0300-13	5CASDL.0400-13	5CASDL.0430-13
General information			
Certification			
CE		Yes	
cULus		Yes	
GOST-R		Yes	
GL		Yes [1)]	
Cable structure			
Wire cross section		AWG 24 (control wires) AWG 26 (DVI, USB, data)	
Properties		Silicone- and halogen-free	
Shield		Individual cable pairs and entire cable	
Complete shielding		Aluminum-clad foil + tinned copper braiding	
Outer sheathing			
Material		Special semi-glossy TMPU	
Color		Black	
Labeling		(B&R) SDL cable (UL) AWM 20236 80°C 30V E63216	
Connector			
Type		2x DVI-D (24+1), male	
Connection cycles		Min. 200	
Contacts		Gold-plated	
Mechanical protection		Metal cover with crimped stress relief	
Locating screw tightening torque		Max. 0.5 Nm	
Electrical characteristics			
Operating voltage		≤30 V	
Test voltage			
Wire/Wire		1 kV	
Wire/Shield		0.5 kV	
Wave impedance		100 ±10 Ω	
Conductor resistance			
AWG 24		≤95 Ω/km	
AWG 26		≤145 Ω/km	
Insulation resistance		>200 MΩ/km	
Operating conditions			
Approbation		UL AWM 20236 80°C 30 V	
Flame-resistant		In accordance with UL758 (cable vertical flame test)	
Oil and hydrolysis resistance		In accordance with VDE 0282-10	
Environmental conditions			
Temperature			
Storage		-20 to 60°C	
Fixed installation		-20 to 60°C	
Flexible installation		-5 to 60°C	

Table 247: 5CASDL.0300-13, 5CASDL.0400-13, 5CASDL.0430-13 - Technical data

Product ID	5CASDL.0300-13	5CASDL.0400-13	5CASDL.0430-13
Mechanical characteristics			
Dimensions			
Length	30 m ±280 mm	40 m ±380 mm	43 m ±410 mm
Diameter		Max. 12 mm	
Extender box			
Width		35 mm	
Length		125 mm	
Height		18.5 mm	
Flex radius			
Fixed installation		≥6x cable diameter (from male connector - ferrite bead) ≥10x cable diameter (from ferrite bead - ferrite bead)	
Flexible installation		≥15x cable diameter (from ferrite bead - ferrite bead)	
Flexibility		Flexible; valid for ferrite bead - ferrite bead (tested 300,000 cycles with 15x cable diameter, 4800 cycles/hour)	
Drag chain data			
Flex cycles		300,000	
Velocity		4800 cycles/hour	
Flex radius		180 mm; 15x cable diameter	
Hub		460 mm	
Weight	Approx. 5430 g	Approx. 7200 g	Approx. 7790 g
Tension			
During operation		≤50 N	
During installation		≤400 N	

Table 247: 5CASDL.0300-13, 5CASDL.0400-13, 5CASDL.0430-13 - Technical data

1) Yes, although applies only if all components installed within the complete system have this certification

5.5.1.4 Flex radius specifications

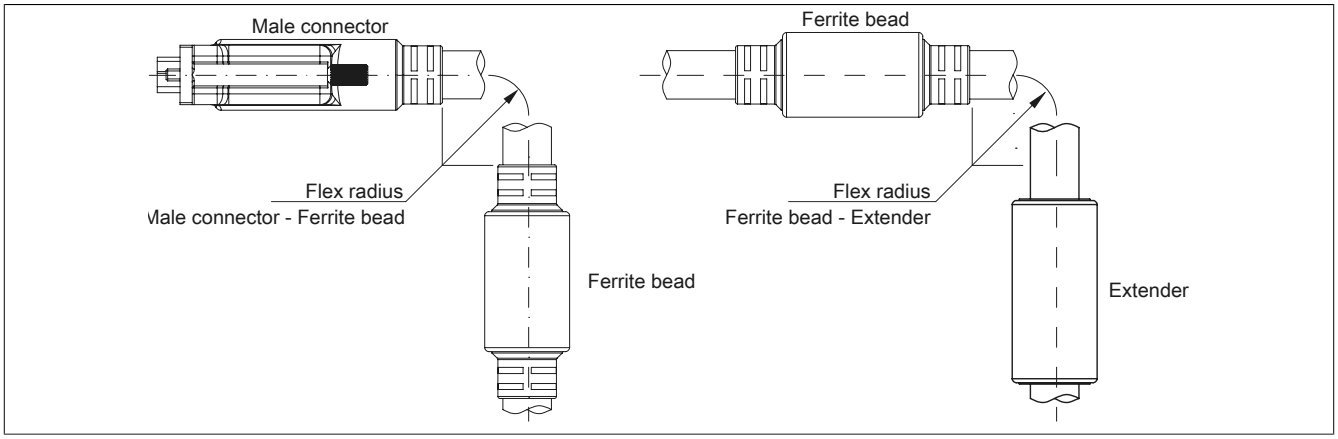

Figure 188: Flex radius specification with extender

5.5.1.5 Dimensions

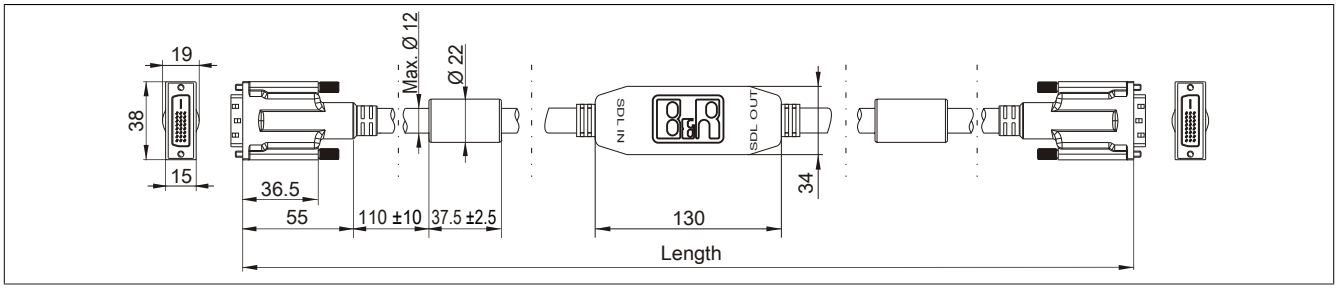

Figure 189: 5CASDL.0xx0-13 - Dimensions

5.5.1.6 Cable pinout

Warning!

If you choose to make a suitable cable yourself, it should be wired according to these specifications.

If a self-made cable is used, B&R cannot guarantee that it will function properly. All cables provided by B&R are guaranteed to function properly, however.

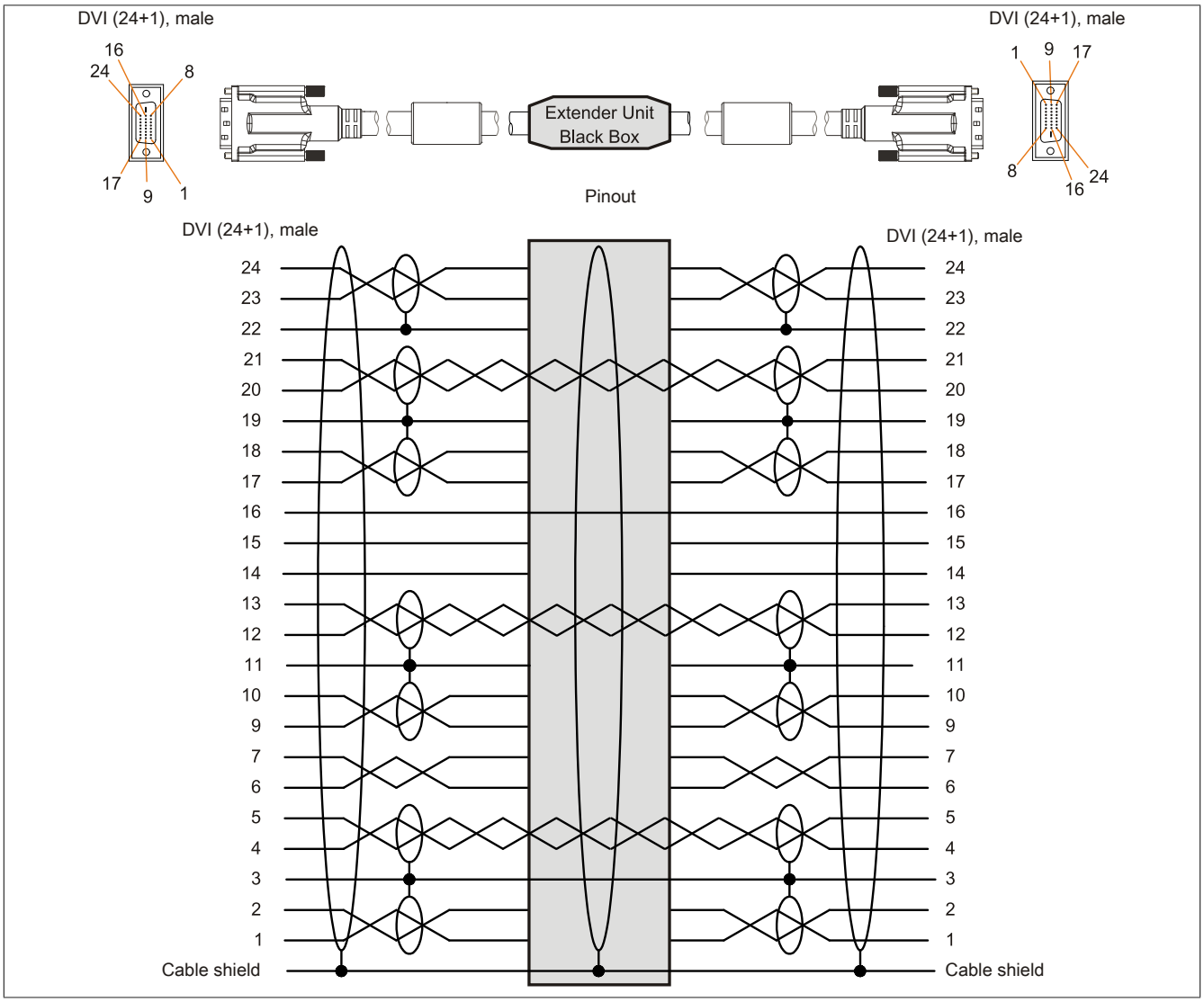

Figure 190: 5CASDL.0xx0-13 - Pinout

5.5.1.7 Cable connection

SDL flex cables with an extender must be connected between the B&R Industrial PC and the Automation Panel display unit in the correct direction. The proper signal direction is indicated on the extender.

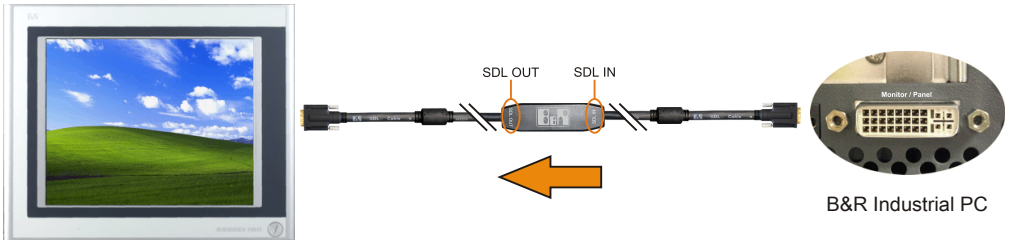

Figure 191: Example of the signal direction for an SDL flex cable with extender

5.6 USB cables

5.6.1 5CAUSB.00xx-00

5.6.1.1 General information

USB cables are designed to achieve USB 2.0 transfer speeds.

5.6.1.2 Order data

Model number	Short description	Figure
	USB cables	
5CAUSB.0018-00	USB 2.0 connection cable type A - type B, 1.8 m	
5CAUSB.0050-00	USB 2.0 connection cable type A - type B, 5 m	

Table 248: 5CAUSB.0018-00, 5CAUSB.0050-00 - Order data

5.6.1.3 Technical data

Product ID	5CAUSB.0018-00	5CAUSB.0050-00
General information		
Certification		
CE	Yes	
cULus	Yes	
GOST-R	Yes	
Cable structure		
Wire cross section	AWG 24, 28	
Shield	Entire cable	
Outer sheathing		
Color	Beige	
Connector		
Type	USB type A male and USB type B male	
Mechanical characteristics		
Dimensions		
Length	1.8 m ±30 mm	5 m ±50 mm
Diameter	Max. 5 mm	
Flex radius	Min. 100 mm	

Table 249: 5CAUSB.0018-00, 5CAUSB.0050-00 - Technical data

5.6.1.4 Cable pinout

Warning!

If you choose to make a suitable cable yourself, it should be wired according to these specifications.

If a self-made cable is used, B&R cannot guarantee that it will function properly. All cables provided by B&R are guaranteed to function properly, however.

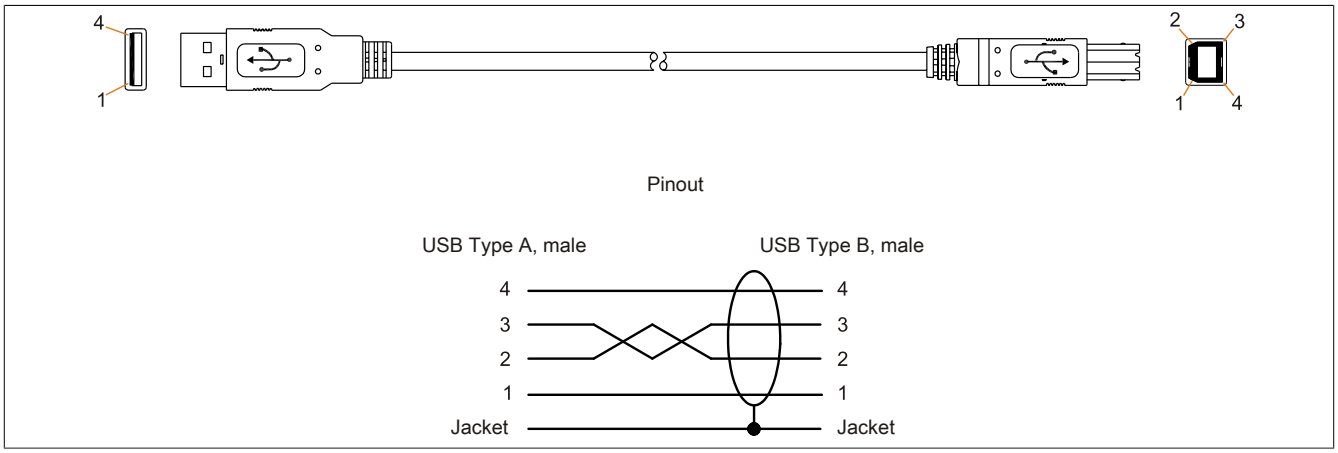

Figure 192: 5CAUSB.00xx-00 USB cables - Pinout

5.7 RS232 cables

5.7.1 9A0014.xx

5.7.1.1 General information

RS232 cables are used as extension cables between two RS232 interfaces.

5.7.1.2 Order data

Model number	Short description	Figure
	RS232 cables	
9A0014.02	RS232 extension cable for remote operation of a display unit with touch screen, 1.8 m	
9A0014.05	RS232 extension cable for remote operation of a display unit with touch screen, 5 m	
9A0014.10	RS232 extension cable for remote operation of a display unit with touch screen, 10 m	

Table 250: 9A0014.02, 9A0014.05, 9A0014.10 - Order data

5.7.1.3 Technical data

Product ID	9A0014.02	9A0014.05	9A0014.10
General information			
Certification			
CE		Yes	
GOST-R	-	Yes	
Cable structure			
Wire cross section		AWG 26	
Shield		Entire cable	
Outer sheathing			
Color		Beige	
Connector			
Type		9-pin male/female DSUB connector	
Locating screw tightening torque		Max. 0.5 Nm	
Mechanical characteristics			
Dimensions			
Length	1.8 m ±50 mm	5 m ±80 mm	10 m ±100 mm
Diameter		Max. 5 mm	
Flex radius		Min. 70 mm	

Table 251: 9A0014.02, 9A0014.05, 9A0014.10 - Technical data

5.7.1.4 Cable pinout

Warning!

If you choose to make a suitable cable yourself, it should be wired according to these specifications.

If a self-made cable is used, B&R cannot guarantee that it will function properly. All cables provided by B&R are guaranteed to function properly, however.

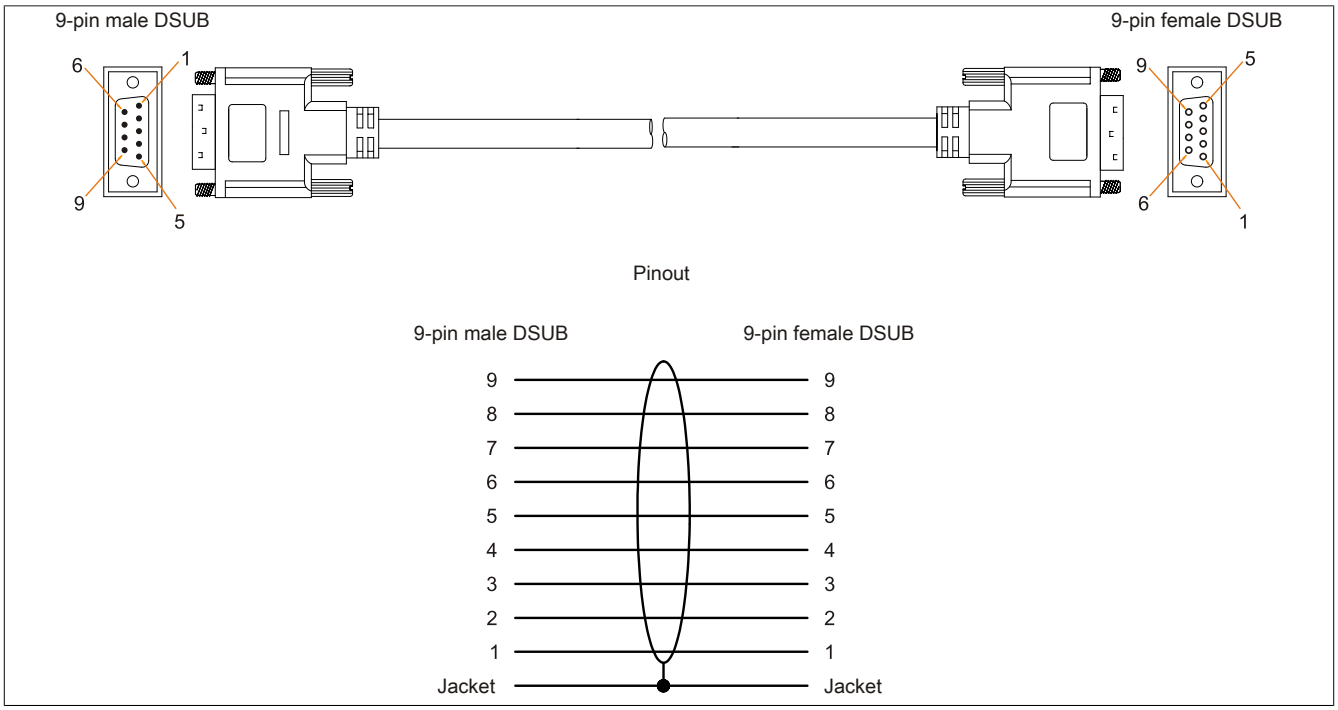

Figure 193: 9A0014.xx RS232 cables - Pinout

Chapter 7 • Maintenance and service

This chapter describes service/maintenance work that can be carried out by a qualified end user.

1 Changing the battery

The lithium battery buffers the internal real-time clock (RTC) and CMOS data.

Information:

- **The product design allows the battery to be changed with the B&R device switched either on or off. In some countries, safety regulations do not allow batteries to be changed while the module is switched on.**
- **Any BIOS settings that have been made will remain when the battery is changed with the power turned off (stored in non-volatile EEPROM). The date and time must be reset later since this data is lost when the battery is changed.**
- **The battery should only be changed by qualified personnel.**

Warning!

The battery must be replaced by a Type CR2477N Renata battery only. The use of another battery may present a risk of fire or explosion.

The battery may explode if handled improperly. Do not recharge, disassemble or dispose of in fire.

The following replacement lithium batteries are available: 4A0006.00-000 (1 pc.) and 0AC201.91 (4 pcs.).

1.1 Procedure

- Disconnect the power supply to the B&R industrial PC (unplug the power cable!). Isolate from all potential sources of electrical power!
- Touch the housing or ground connection in order to discharge any electrostatic charge from your body.
- Pull the battery holder out of the Panel PC ① and remove the battery ②.

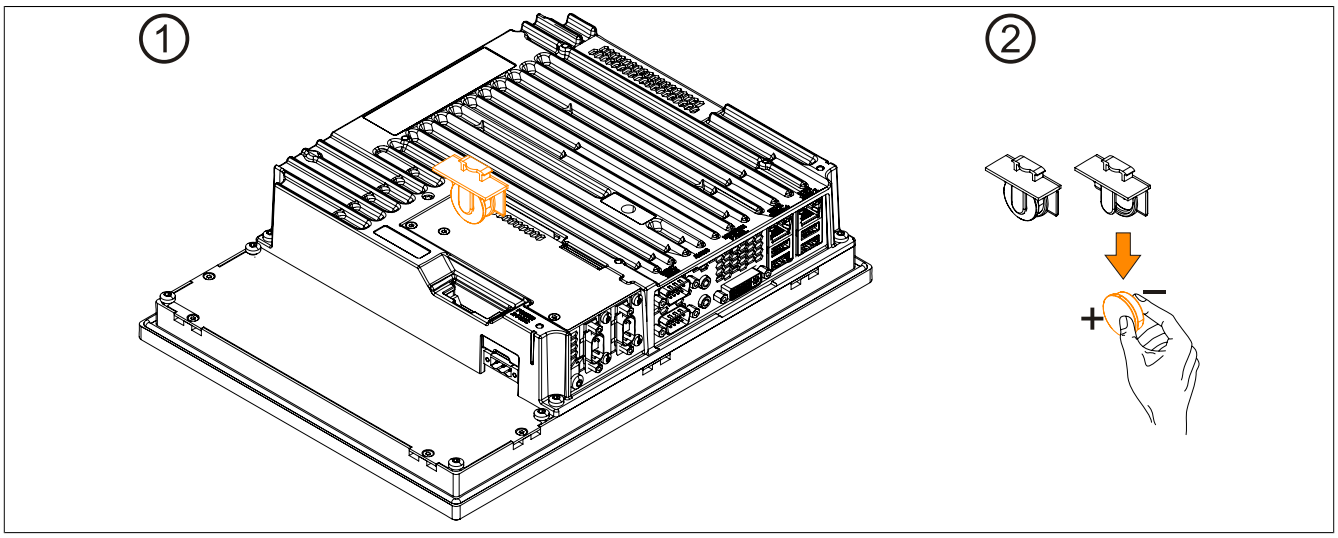

Figure 194: Pull out battery holder and remove battery

- The battery should not be held by its edges. Insulated tweezers may also be used to insert the battery.

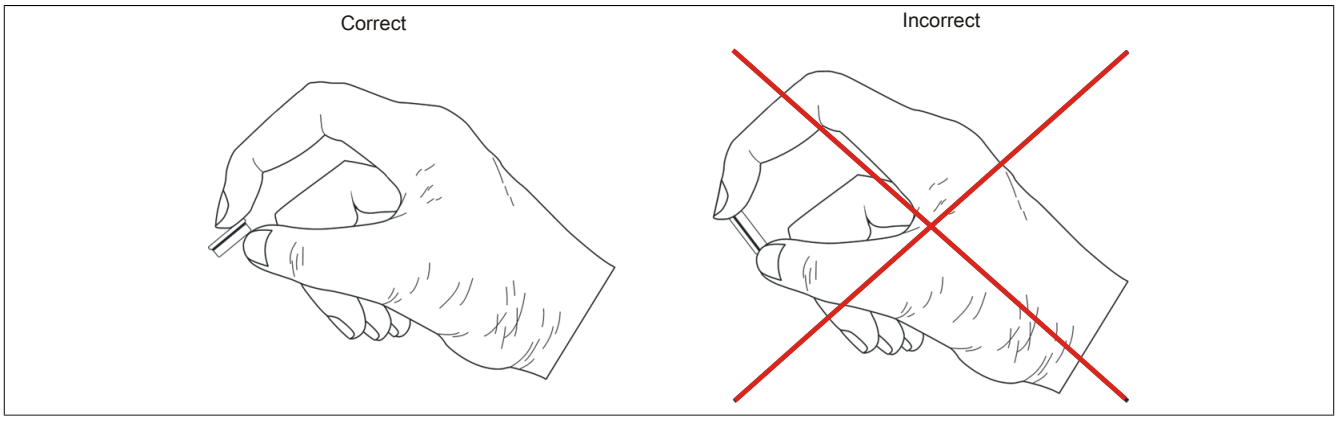

Figure 195: Battery handling

- Insert the new battery with the correct polarity.
- Insert battery holder into the Panel PC.
- Reconnect the power supply to the B&R Industrial PC (plug in the power cable).
- Check the date and time in BIOS and correct them if necessary.

Warning!

Lithium batteries are considered hazardous waste. Used batteries should be disposed of in accordance with applicable local regulations.

2 Replacing a CFast card

Caution!

Power must be turned off before replacing CFast cards.

The CFast card can be replaced quickly and easily using the ejector (see image).

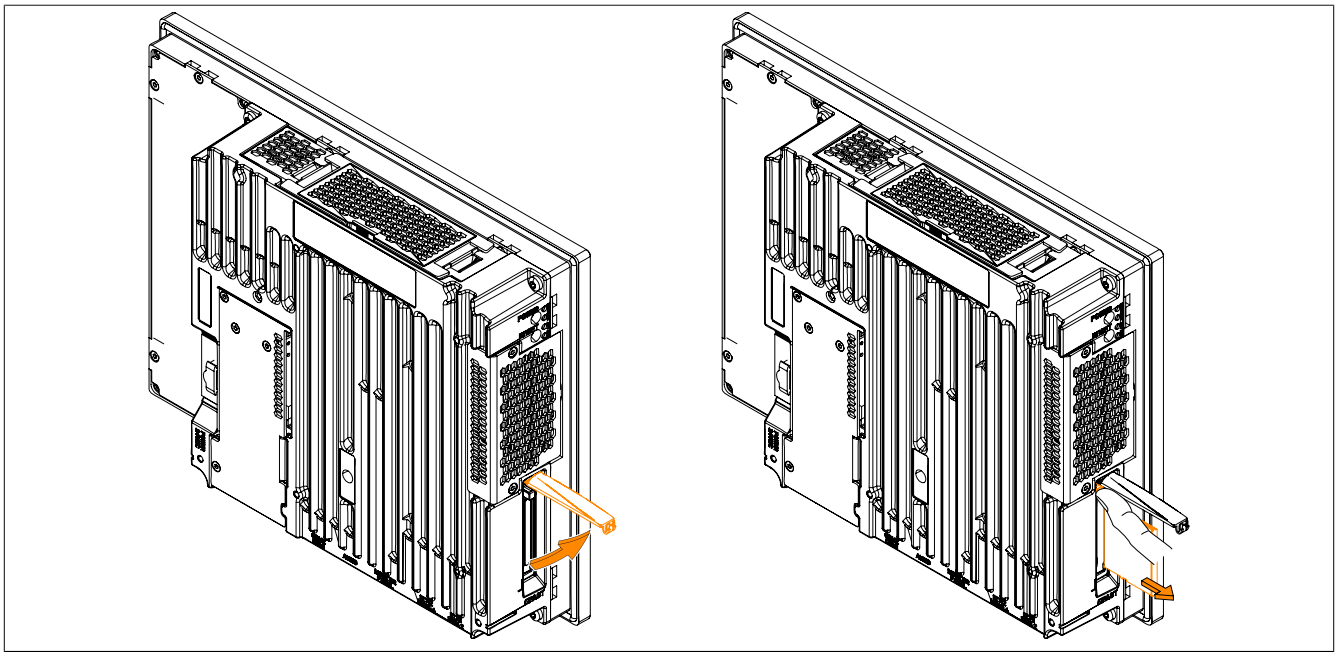

Figure 196: Replacing a CFast card

3 Cleaning

Danger!

This device can only be cleaned when switched off in order to prevent unintended functions from being triggered when handling the touch screen or pressing keys.

This device should be cleaned with a moist cloth. The cloth should be moistened with water and detergent, a screen cleaning agent or alcohol (ethanol). The cleaning agent should be applied to the cloth beforehand, not sprayed directly on the device! Aggressive solvents, chemicals, scouring agents, pressurized air or steam jets should never be used.

Information:

Displays with a touch screen should be cleaned regularly.

4 Tips for extending the service life of the display

4.1 Backlight

The service life of the backlight is specified by its "half-brightness time". For example, a specified operating time of 50,000 hours means that the display would still retain 50% of its brightness after this time.

4.1.1 How can the service life of the backlight be extended?

- By setting the display brightness to the lowest value that is still comfortable for the eyes
- By using dark images
- By reducing the brightness by 50%, which can result in an approximately 50% increase in the half-brightness time

4.2 Screen burn-in

Screen burn-in refers to the "burning in" of a static image on a display after being displayed for a prolonged period of time. Nevertheless, static images are not the only cause of screen burn-in. Screen burn-in is also referred to as burn-in effect, image retention, memory effect, memory sticking or ghost image.

There are basically two types:

- Area type: This type of screen burn-in is indicated by a dark gray image. The effect will disappear if the display is switched off for a long period of time.
- Line type: This type of screen burn-in can cause lasting damage.

4.2.1 What causes screen burn-in?

- Static images
- No screensaver
- Sharp transitions in contrast (e.g. black/white)
- High ambient temperatures
- Operation outside of specifications

4.2.2 How can screen burn-in be avoided?

- By constantly changing between static and dynamic images
- By avoiding excessive brightness differences between foreground and background elements
- By using colors with similar brightness
- By using complementary colors in follow-up images
- By using a screensaver

5 Pixel errors

Information:

Displays may contain defective pixels (dead/stuck pixels) that result from the manufacturing process. These flaws are not grounds for claiming reclamation or warranty.

Appendix A

1 Abbreviations

Abbreviation	Stands for	Description
NC	Normally closed	A normally closed relay contact
	Not connected	Used in pinout descriptions if a terminal or pin is not connected to a module
ND	Not defined	In data tables, this stands for a value that has not been defined. This may be because a cable manufacturer does not provide certain technical data, for example.
NO	Normally open	A normally open relay contact
TBD	To be defined	Used in technical data tables when certain information is not yet available. The value will be provided later.

Table 252: Abbreviations used in this user's manual

2 Viewing angles

Viewing angle specifications (R, L, U, D) for the display types are listed in the technical data for each device.

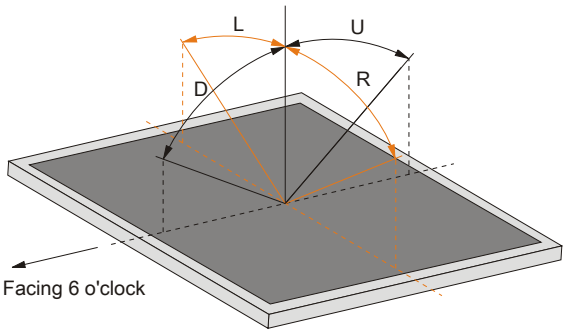

3 Chemical resistance

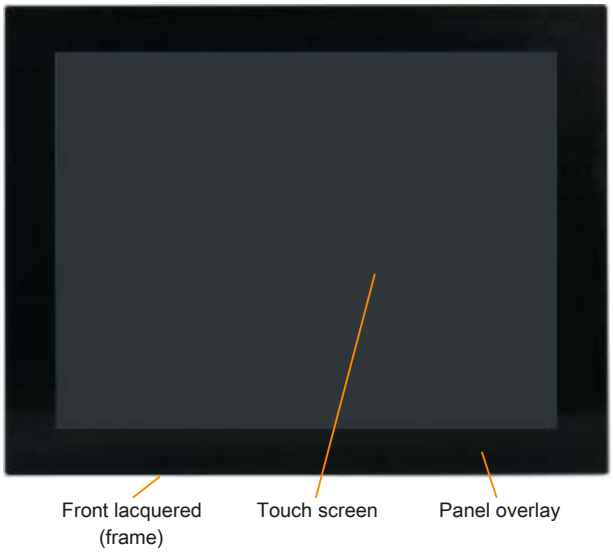

3.1 Panel overlay

Unless otherwise specified, the panel overlay conforms to DIN 42115 (Part 2). This means it is resistant to exposure to the following chemicals for a 24-hour period with no visible signs of damage:

- Acetaldehyde
- Acetone
- Acetonitrile
- Alkali carbonate
- Alkane
- Formic acid < 50%
- Ammonia < 40%
- Amyl acetate
- Gasoline
- Bichromate
- Brake fluid
- Castor oil
- Hydrochloric acid <36%
- Cyclohexanol
- Cyclohexanone
- Decon
- Diacetone alcohol
- Diesel
- Diethyl ether
- Diethyl phthalate
- Dimethylbenzene
- Dioxan
- Dowandol
- DRM/PM
- Iron chloride
- Iron chloride (FeCl2)
- Iron chloride (FeCl3)
- Acetic acid < 50%
- Butyl acetate
- Ethanol
- Ether
- Ethyl acetate
- 2-Butoxyethanol
- Aviation fuel
- Formaldehyde 37 - 42%
- Transmission fluid
- Glycerine
- Glycol
- Isophorone
- Isopropanol
- Potassium
- Potassium carbonate
- Potassium hydroxide
- White spirit
- Linseed oil
- Methanol
- Methylbenzene
- Methyl ethyl ketone
- Methylisobutylketone
- Sodium bisulphate
- Sodium carbonate
- Sodium hydroxide <40%
- Sodium hypochlorite <20%
- Paraffin oil
- Phosphoric acid < 30%
- Phthalate
- Nitric acid < 10%
- Sea water
- Cutting oil
- Sulphuric acid < 10%
- Turpentine oil replacement
- Triacetin
- Trichloracetic acid < 50%
- Trichloroethane
- Washing agents
- Water
- Hydrogen peroxide < 25%
- Fabric conditioner

The panel overlay is not resistant to the following chemicals:

- Benzyl alcohol
- Dimethyl formamide
- Concentrated mineral acid
- Concentrated caustic solution
- High-pressure steam over 100°C
- Methylene chloride
- Tetrahydrofuran

3.2 Lacquered aluminum front

Unless otherwise specified, the lacquered front conforms to DIN 42115 (Part 2). This means it is resistant to exposure to the following chemicals for a 24-hour period with no visible signs of damage:

- Formic acid < 50%
- Ammonia < 40%
- Brake fluid
- Hydrochloric acid <10%
- Diesel
- Acetic acid < 50%
- Transmission fluid
- Lactic acid <10%
- Isopropanol
- Coolant <4%
- Sodium hydroxide <40%
- Petroleum
- Phosphoric acid < 25%
- Saline <10%
- Sulphuric acid < 25%
- Sidolin
- Skydrol

The lacquered aluminum front is not resistant to the following chemicals:

- Acetone
- Ethyl acetate

3.3 Touch screen

AMT touch screen (single-touch)

Unless otherwise specified, the AMT touch screen is resistant to exposure to the following chemicals for a 1-hour period (at 25°C) with no visible signs of damage:

- Acetone
- Ammonia-based glass cleaner
- Beer
- Unleaded gasoline
- Chemical cleaning agents
- Hydrochloric acid <6%
- Coca-Cola
- Diesel
- Dimethylbenzene
- Vinegar
- Ethanol
- Antifreeze
- Transmission fluid
- Household cleaning agents
- Hexane
- n-hexane
- Isopropanol
- Coffee
- Methylbenzene
- Methylene chloride
- Methyl ethyl ketone
- Mineral spirits
- Motor oil
- Nitric acid < 70%
- Salt solution <5% tea
- Turpentine
- Grease
- Sulphuric acid < 40%
- Cooking oil

3M touch screen (multi-touch)

Unless otherwise specified, the 3M touch screen conforms to ASTM D 1308-02 and ASTM F 1598-95. This means it is resistant to exposure to the following chemicals for a 24-hour period with no visible signs of damage:

- Acetone
- Ammonia < 5%
- Gasoline
- Beer
- Lead
- Brake fluid
- Hydrochloric acid <6%
- Coca-Cola
- Dimethylbenzene
- Ethanol
- Rubber cement
- Isopropanol
- Coffee
- Ink
- Lipstick
- Lysol
- Methylbenzene
- Methyl ethyl ketone
- Naphtha
- Nitric acid < 70%
- Grease
- Sulphuric acid < 40%
- Stamping ink
- Tea
- Trichloroethylene
- Water
- White wine vinegar
- Windex Original

4 Touch screen

4.1 Touch screen 5-wire AMT (single-touch)

4.1.1 Technical data

Information:

The following characteristics, features and limit values only apply to this individual component and can deviate from those specified for the complete system. For the complete system in which this individual component is used, refer to the data given specifically for that device.

Product ID	5-wire AMT touch screen
General information	
Certification	
CE	Yes
c-UL-us	Yes
Manufacturer	AMT
Technology	Analog, resistive
Release pressure	<1 N
Light permeability	81% ±3%
Environmental conditions	
Temperature	
Operation	- 20 to 70°C
Storage	- 40 to 80°C
Transport	- 40 to 80°C
Relative humidity	
Operation	90% at max. 50°C
Storage	90% RH at max. 60°C for 504 hours
Transport	90% RH at max. 60°C for 504 hours
Operating conditions	
Service life	36 million touch operations at the same position (release pressure: 250 g, interval: 2x per second)
Enabling	Finger, pointer, credit card, glove
Drivers	Touch screen drivers for approved operating systems are available in the Downloads section of the B&R website (www.br-automation.com).

Table 253: 5-wire AMT touch screen - Technical data

4.1.2 Temperature humidity diagram

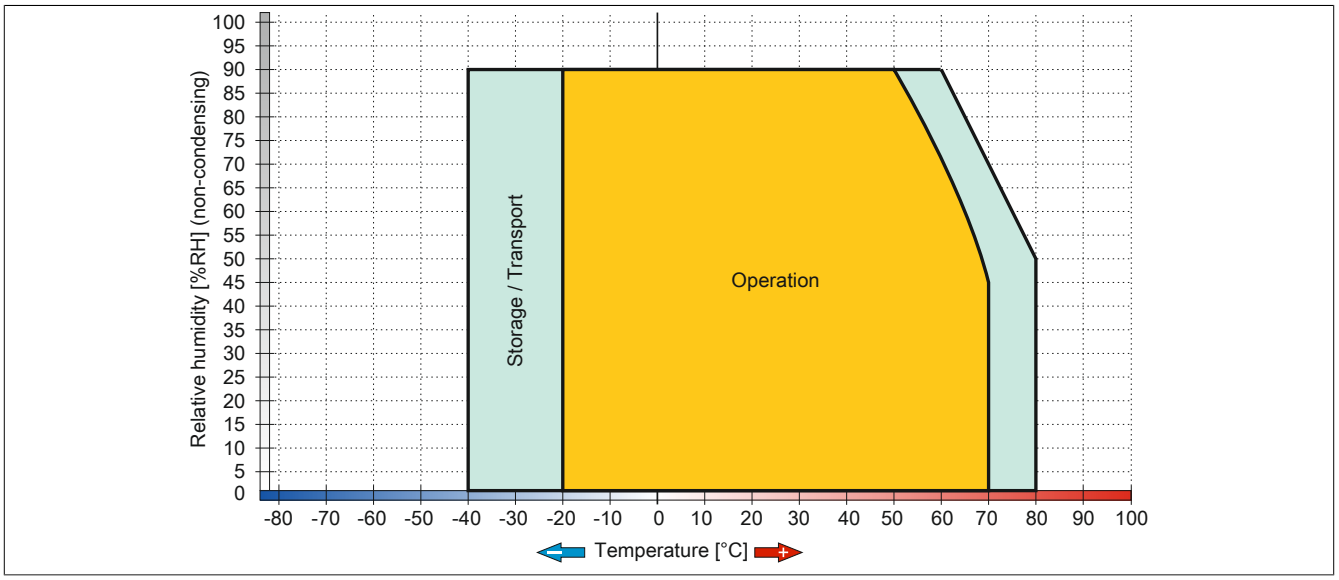

Figure 197: 5-wire AMT touch screen - Temperature humidity diagram

4.2 3M touch screen (multi-touch)

4.2.1 Technical data

Information:

The following characteristics, features and limit values only apply to this individual component and can deviate from those specified for the complete system. For the complete system in which this individual component is used, refer to the data given specifically for that device.

Product ID	3M touch screen
General information	
Certification CE	 Yes
Manufacturer	3M
Technology	Projected capacitive touch (PCT)
Light permeability	88 ±2%
Environmental conditions	
Temperature Operation Storage Transport	 0 to 50°C -20 to 70°C -20 to 70°C
Relative humidity Operation Storage Transport	 90% at max. 35°C 90% at max. 35°C 90% at max. 35°C
Operating conditions	
Enabling	Finger, thin glove, 3M Smart Pen

Table 254: 3M touch screen - Technical data

4.2.2 Temperature humidity diagram

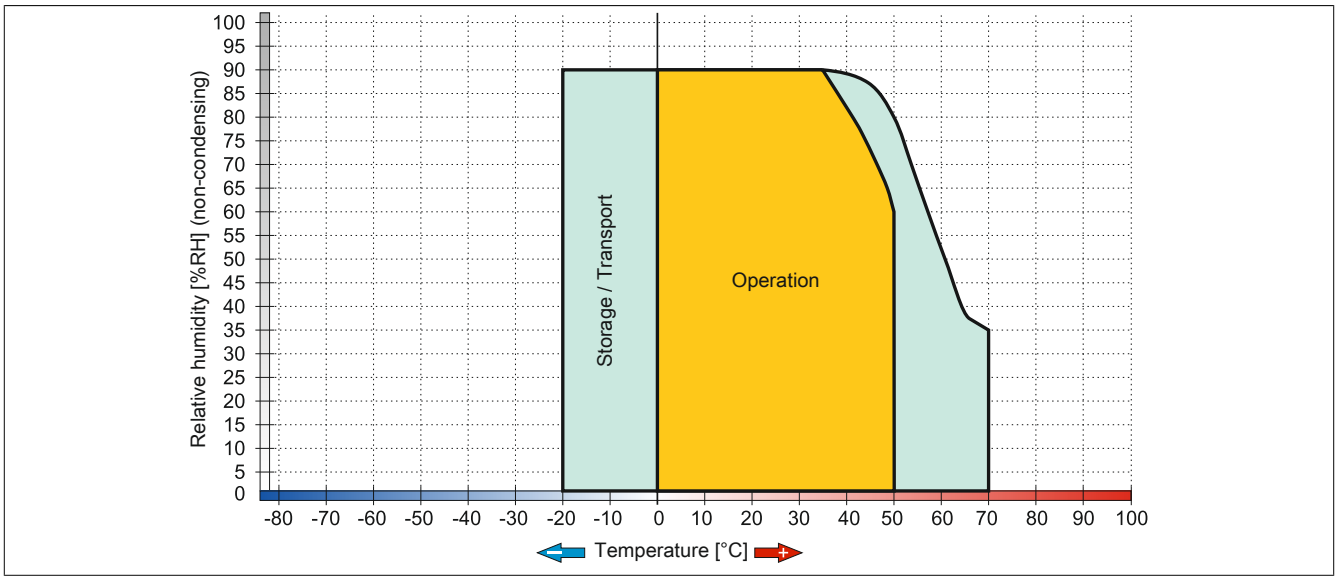

Figure 198: 3M touch screen - Temperature/Humidity diagram

A

B

C

D

E

F

G

H

I

L

M

O

P

Q

R

S

T

U

V

W